OPERATION, MAINTENANCE, AND MONITORING MANUAL

Wellhead Granular Activated Carbon Treatment Systems
Highway 260 and Main Street WQARF Site
Cottonwood, Arizona
Water Quality Assurance Revolving Fund
Site Code 507632-00

August 2021

Prepared by:

ARIZONA DEPARTMENT OF ENVIRONMENTAL QUALITY
1110 West Washington Street
Phoenix, Arizona 85007

&

HYDRO GEO CHEM, INC.
51 West Wetmore Road, Suite 101
Tucson, Arizona 85705
Contract Number: CTR045158

HYDRO GEO CHEM, INC.
Environmental Science & Technology

OPERATION, MAINTENANCE, AND MONITORING MANUAL

GRANULAR ACTIVATED CARBON WELLHEAD TREATMENT SYSTEMS
HIGHWAY 260 AND MAIN STREET WQARF SITE
COTTONWOOD, ARIZONA

Prepared by:

ARIZONA DEPARTMENT OF ENVIRONMENTAL QUALITY
1110 West Washington Street
Phoenix, Arizona 85007

&

HYDRO GEO CHEM, INC.
51 West Wetmore Road, Suite 101
Tucson, Arizona 85705

TABLE OF CONTENTS

1. INTRODUCTION 1

2. EMERGENCY AND OTHER CONTACT NUMBERS 2
- 2.1 Emergency Contacts 2
- 2.2 Other Contact Numbers 2

3. TREATMENT SYSTEMS DESCRIPTIONS 3
- 3.1 Owners, Clients, Agencies and Utilities 3
- 3.2 Treatment System Description 3

4. OPERATING PROCEDURES 6
- 4.1 Start-up and Shut-down Procedures 6
- 4.2 Normal Operating Procedures 7
  - 4.2.1 Water Flow and Diagrams 7
  - 4.2.2 GAC Treatment and Change-Out 8
  - 4.2.3 Clack Control Valves 9
- 4.3 Periodic Monitoring and Maintenance 10
  - 4.3.1 Treatment System Maintenance 10
  - 4.3.2 Treatment System Monitoring 12
  - 4.3.3 Reporting 14
- 4.4 Pre- and Post-Filter Replacement Procedures 15
- 4.5 Carbon Change-Out Procedures 15

5. REFERENCES 18

TABLES

Table 1 GAC Change-Out Concentration Criteria 14

FIGURES

Figure 1 Site Location
Figure 2 Ultima Vessel Schematic
Figure 3 GAC Vessel Manifold Diagram

APPENDICES

Appendix A Component Information, Specifications, and Clack Valve Manual
Appendix B GAC Treatment System OMM Data Collection Form
Appendix C Specific Property Wellhead Treatment System Information

ACRONYMS AND ABBREVIATIONS

AAC	Arizona Administrative Code
ADEQ	Arizona Department of Environmental Quality
ARS	Arizona Revised Statutes
ASRAC	Arizona Superfund Response Action Contract
AWQS	Aquifer Water Quality Standards
COC	contaminant of concern
DCE	dichloroethene
ERA	Early Response Action
GAC	granular activated carbon
HGC	Hydro Geo Chem, Inc.
µg/L	micrograms per liter
OMM	operation, maintenance and monitoring
PCE	tetrachloroethene
psi	pounds per square inch
TCE	trichloroethene
VOC	volatile organic compound
WQARF	Water Quality Assurance Revolving Fund

1. INTRODUCTION

This Operations Maintenance and Monitoring (OMM) Manual was prepared to provide system information required to efficiently operate, maintain, and monitor the granular activated carbon (GAC) wellhead treatment systems operated as part of the Highway 260 and Main Street Water Quality Assurance Revolving Fund (WQARF) site (the Site) in Cottonwood, Arizona (Figure 1). This OMM Manual was prepared pursuant to Arizona Administrative Code (AAC) R18-16-411 and is subject to change and or modification to account for changes to existing systems or the addition of new systems.

The Arizona Department of Environmental Quality (ADEQ) has installed GAC wellhead treatment systems at private wells within the Site as part of Early Response Actions (ERA). The objective of the ERA is to address current risk to public health, welfare, and the environment by eliminating affected well owners exposure to groundwater contaminated with tetrachloroethene (PCE) above Arizona Aquifer Water Quality Standards (AWQS). The wellhead treatment systems remove and reduce the contaminants of concern (COCs), primarily PCE but also trichloroethene (TCE) and *cis*-1,2-dichloroethene (*cis*-1,2-DCE), from groundwater to concentrations below their respective AWQS. The AWQS for PCE and TCE is 5 micrograms per liter (µg/L). The AWQS for *cis*-1,2-DCE is 70 µg/L. The operating requirements of the treatment systems include: 1) provide drinking water with volatile organic compound (VOC) concentrations removed to below AWQS, and 2) maintain acceptable flow rates for the private well owner or small water supply user, in accordance with Arizona Revised Statute (ARS) Section 49-282.06(B)(4)(b) and AAC R18-16-407(G).

To date, GAC wellhead treatment systems have been installed at various properties (Appendix C.1). Installation of treatment systems at these properties was based on the results of private well sampling since March 2017. VOC concentrations in the private wells, prior to GAC treatment system installation, exceeded AWQS for at least one COC. COC concentrations are anticipated to continue to exceed AWQS for the near future, based on private well water quality data from the Site.

2. EMERGENCY AND OTHER CONTACT NUMBERS

2.1 Emergency Contacts

An emergency is an uncontrolled situation, an injury that is life threatening, fire, or anything that requires immediate assistance from the fire department, emergency medical services, or police department. **In the event of an emergency, call 911**. After notification to 911, call the Arizona Department of Environmental Quality (ADEQ):

- ADEQ Project Manager:
    - Gianna Trujillo, (520) 628-6709

2.2 Other Contact Numbers

For all other non-emergency situations with regard to the granular activated carbon (GAC) wellhead treatment systems, contact phone numbers are:

- ADEQ Project Manager:
    - Gianna Trujillo, (520) 628-6709
- OMM Contractor:
    - Hydro Geo Chem, Inc. (HGC), (520) 293-1500, Extension 115
- Plumber:
    - Chris Geter, (928) 451-1573

The operator is to promptly notify ADEQ in the case of failure of a treatment system component that could affect the quality of treated water. ADEQ will then promptly notify the potentially affected water user or provider.

3. TREATMENT SYSTEMS DESCRIPTIONS

3.1 Owners, Clients, Agencies and Utilities

The components of the original private well systems are owned, maintained, and operated by the property owners. The water distribution systems are supplied by a submersible pump in the private well on each property. No water supply other than a groundwater well is available at these locations, as these properties are not connected to the City of Cottonwood municipal water supply. The electrical power needed for pump operation and for the backflush valve components of the treatment system is supplied by the private well owner.

The installed wellhead treatment systems, including GAC vessels, sediment filters, and flow control and sampling valves are owned and operated by ADEQ. ADEQ used contractors and subcontractors to install the treatment systems by incorporating them into the existing private water supply systems.

3.2 Treatment System Description

Treatment system installation dates and relevant system equipment information are summarized in Appendix C.2. Specifications for GAC vessels are provided in Appendix A.1. Specifications for sediment filter housings are provided in Appendix A.2. Specifications for water meters are provided in Appendix A.3. Specifications for GAC are provided in Appendix A.4. Specifications for Clack valves are provided in Appendix A.5. Each treatment system generally consists of:

- Two Ultima vessels filled with GAC;
- A plumbing manifold capable of connecting two GAC vessels in series, parallel, or bypassing one vessel;
- Clack control valves installed at the top of each GAC vessel for backflush capability;
- One pre-GAC sediment filter (pre-filter) installed upstream of the GAC vessels and manifold;
- One post-GAC sediment filter (post-filter) installed downstream of the GAC vessels and manifold;

- Five pressure gauges positioned to take readings before and after each sediment filter and GAC vessel;
- A water meter that counts total gallons of water passed through the system; and
- Three spigot valves acting as sample ports before, between, and after the GAC vessels.

Flow diagrams of the treatment systems at each location, showing the flow path, configuration, and major components, are included in Appendix C.4. In these diagrams, the valve symbols represent two-way valves that shut off or redirect water flows through the GAC vessels or to bypass the system entirely. The valves open and close via a lever operated by hand; the valve is open with the lever positioned parallel to the pipe and is closed with the lever positioned perpendicular to the pipe.

Well water is pumped into the system; a pump controller (pressure switch) monitors the water system pressure at a point just downstream of the wellhead and turns the pump on when pressure is less than the lower value for the pressure switch, typically 30 pounds per square inch (psi). The pressure tank takes in water until the pressure is at the higher value for the pressure switch, typically 60 psi, and then the controller turns the pump off. The pressure tanks have diaphragms that separate a chamber of air from the water. As the pressure tank fills with water, the chamber of air is compressed, keeping the water in the system pressurized. This operation increases the life of the pump by avoiding frequent on/off cycling and supplies adequate water pressure to the property.

From the pressure tank, water first passes through the pre-filter to remove sediments and debris from the water stream that could potentially affect the GAC performance and shorten its lifetime. The water then enters the manifold, is directed to the lead GAC vessel through the control valve, is dispersed over the top of the GAC bed through a distribution screen, flows down through the bed where contaminants are adsorbed to the GAC, and then flows into the inlet screen of the discharge tube in the center of the vessel. The clean water flows up the tube and exits the vessel through the outlet of the control valve, reenters the manifold, and then repeats the process in the lag GAC vessel. Figure 2 presents a schematic of the Ultima GAC vessel. The manifold allows for either GAC vessel to operate as the lead or lag, both in parallel, or can be set to allow flow to bypass one or both of the GAC vessels entirely. Figure 3 presents various manifold valve configurations. The clean drinking water then flows through the post-filter to remove possible carbon particulates. Pressure gauges are installed before and after each

sediment filter and GAC vessel; this allows monitoring for pressure drops across filters as an indication of filters restricting flow and requiring maintenance. The water meter is downstream of the post-filter and keeps count of the total volume of water that has flowed through the system. After passing through the water meter, clean water is conveyed to its point of use via the property owner's plumbing.

The Clack control valves on top of the GAC vessels enable backflush through the GAC vessels. The control valves may be programmed for automatic backflush at desired time intervals. As of the finalization of this manual, Clack control valves are depowered, disabling automatic backflush in favor of manual backflush. Clack valves may be powered and set to enable automatic backflushes at a future date, as appropriate.

A backflush consists of reversing the flow of water so that it enters from the bottom of the GAC bed, lifts, rinses and restratifies the bed, and then exits through the top of the vessel. During a backflush event, water entering the Clack valve flows down the discharge tube, into the bottom of the GAC bed and up through the vessel. The flow exits the vessel through the control valve backflush line that is piped to an underground trench or sanitary drain. The backflush events are recommended by the manufacturer to prevent channeling that may occur in the GAC bed over time and to reduce pressure drop through the vessel due to buildup of debris. The frequency of automatic backflushes can be changed by reprogramming the Clack control valve. A backflush event can be initiated manually, as well (see control valve manual in Appendix A.5).

4. OPERATING PROCEDURES

4.1 Start-up and Shut-down Procedures

Start-up

Once the conditions described below are met, water can flow through the GAC treatment system to the point of use. Normal startup procedures include ensuring:

1. Valves are positioned such that water flows across GAC vessels in series (Figure 3);
2. No leaks exist;
3. If new GAC is in either GAC vessel, then the new GAC has been soaked in water for at least 24 hours and then backflushed; and
4. Power to the pump, pump controller and Clack control valves is available (NOTE: Clack control valves only need to be powered during backflush or if automatic backflushes are enabled).

Shut-down (Bypass)

Traditional shutdown of the GAC treatment system is not possible because it is a passive system that operates with nothing more than water pressure provided by the well owner's submersible pump and pressure tank. As opposed to traditional shutdown, the treatment system may be entirely or partially bypassed and the Clack control valves may be depowered.

It should be noted however, that as long as untreated water pumped from the well contains COC(s) greater than AWQS, the treatment system should remain in use unless an alternate supply of drinking water, such as bottled water, can be provided to the user.

To change-out one or both of the GAC vessels, or for other reasons requiring maintenance or repair, it may be necessary to bypass the GAC vessels. Bypassing the treatment system may be performed by two methods. The simplest method is by using the 1" Clack valves, but should the need arise, the manifold may also be used to bypass the GAC vessels. The 1.5" Clack valves lack the ability to be used as a GAC vessel bypass. A system equipped with 1.5" Clack valves will rely solely on use of the manifold to bypass GAC vessels. Additionally, some systems are plumbed such that there is a water line leading directly from the pressure tank to points of use (Appendix C.4). This line may also be used to bypass a treatment system.

- Bypass via Clack valves: One or both vessels may be bypassed by positioning the levers on a Clack valve such that they point toward one another. This process and other valve position options are described in detail and visually depicted in the WS1TC Series Installation and Operation Manual included in Appendix A.5.
- Bypass via manifold: One or both vessels may be bypassed by manipulating the levers on manifold valves such that flow is excluded from one or both vessels, but is still allowed to flow to points of use. The positioning of manifold valves to achieve this and other valve position options are visually depicted on Figure 3.

If the system is set such that the GAC vessels are bypassed, ensure that the Clack valves are also depowered.

In the event of a system failure or if it is suspected that the water quality is not meeting AWQS, the GAC treatment system is to be serviced to resolve the issue. ADEQ, the well owner, and the system operator shall be immediately contacted and informed of the situation by telephone and/or email. As of the date of this OMM Manual, notification should be made to:

- ADEQ Project Manager:
  - Gianna Trujillo, (520) 628-6709, Trujillo.Gianna@azdeq.gov;
- OMM Contractor:
  - Abra Bentley, HGC, (520) 293-1500 ext. 115, AbraB@hgcinc.com

During servicing, the Clack control valves on top of the GAC vessels are to be unplugged from the electrical outlet (if not already depowered) to ensure that unintentional backflushing does not occur. If contaminants are not being removed from groundwater to concentrations less than AWQS, or if a water user is not getting sufficient flow from the system, the GAC vessels may be removed from the process stream until the issue is resolved. However, use of untreated groundwater for domestic purposes is strongly discouraged. An alternate source of drinking water may be supplied to the household if the issue cannot be immediately resolved.

4.2 Normal Operating Procedures

4.2.1 Water Flow and Diagrams

The wellhead GAC treatment system is designed to passively operate with the well owner's existing private water distribution system, and does not require day-to-day

maintenance or oversight. Based on the low and high pressure settings for the water pressure tank, the well pump turns on and off automatically according to household water usage. At each treatment system location, water flows from the pressure tank or well through the pre-filter and into the GAC vessels. Water flows from the top of the lead vessel through the GAC and up the center of the vessel in the discharge tube (see Figure 2). Water leaving the lead vessel then flows through the lag vessel, the post-filter, and then to the household. Flow diagrams included in Appendix C.4 show the specific flow path of water through each treatment system.

4.2.2 GAC Treatment and Change-Out

Under normal operation, VOCs are removed to levels below AWQSs in the lead GAC vessel. Over time with exposure to VOCs, the GAC in the lead vessel will become less efficient at removing VOCs and some portion of the influent VOCs will become present in the effluent of the lead vessel. This is known as contaminant "breakthrough". Once breakthrough occurs, the lag vessel removes contaminants exiting the lead vessel to protect the water user from exposure. A GAC change-out of the lead vessel shall be conducted if the following two criteria are met for at least one COC:

1. The concentration of the COC exceeds or likely exceeds[1] its AWQS at the influent of the lead GAC vessel (greater than 5 µg/L for PCE and TCE, and 70 µg/L for *cis*-1,2 DCE); and
2. The concentration of the COC exceeds 50% of its AWQS in breakthrough from the lead GAC vessel (greater than 2.5 µg/L for PCE and TCE, and 35 µg/L for *cis*-1,2 DCE).

After the change-out, the order of the lead and lag vessels are to be switched by manipulating the manifold valves (Figure 3). In other words, the valves are set such that the original lag vessel serves as the lead, and the replacement (new) GAC vessel serves as the lag vessel.

[1] Likely exceeds could be inferred by past concentrations, concentration trends, seasonal concentration observations, etc.

4.2.3 Clack Control Valves

Programming

The Clack control valves on the GAC vessels control the backflush events. After installation of the treatment systems, the Clack control valves were set (depowered) such that no automatic backflushes would occur. The automatic backflushes were discontinued after observation of operating systems indicated that backflushing may be decreasing the efficiency of the GAC and increasing the pressure loss across the GAC. Going forward, the timing of backflushes is to be determined by observations of breakthrough and pressure loss across GAC at each individual treatment system.

Although disabled (depowered) as of the date of this manual, the Clack control valves are factory programmed to automatically perform a backflush every 30 days at 2:00 AM when household water usage is expected to be low. Detailed information on installing, programming, and operating the Clack control valves is provided in Appendix A.5. Some of the most noteworthy information regarding Clack valve programming is:

1. When operating a Clack valve, it may be noted that the display uses the term “regen” or regeneration to indicate backflush. When powered, the Clack control valve displays the time of day or days remaining until a backflush occurs (display points to “Days To Regen”). Pressing the UP button switches the display between time of day and days until backflush.

2. If the Clack control valve is unplugged from the outlet or loses power due to an outage, the time of day needs to be reset. To set the time of day, press SET HOUR, and then set the clock to the nearest hour by pressing the UP or DOWN buttons.

3. If the days until next backflush needs to be changed, hold down the SET HOUR and UP buttons simultaneously for 3 seconds. The display prompts the user to set the regeneration (backflush) time. Select the hour for backflush to occur and then press SET HOUR. Next, the display prompts the user to set the number of days between regeneration (backflushes). Press the UP button until the desired number of days between backflushes is displayed, then press SET HOUR. Note that the number of days until next regeneration (backflush) includes the current day in the count (e.g., if the display shows that regeneration occurs in 2 days, the backflush occurs the next day); if it shows 1 day, backflushing occurs on the current day. Refer to the Clack control valve manual in Appendix A.5 for more information.

Bypass Valve

The Clack control valves are equipped with a bypass valve attachment at the inlet and outlet. The attachment has levers in the shape of arrows that point in the direction of the water flow. Under normal operation, the inlet arrow points toward the control valve and the outlet arrow points away from the control valve. The arrows can be turned to point toward each other to bypass flow into the GAC vessels (refer to Appendix A.5).

4.3 Periodic Monitoring and Maintenance

The wellhead treatment systems require periodic monitoring and maintenance to ensure effective removal of COCs and to enable sufficient water supply capacity. This includes monitoring for GAC vessel breakthrough; replacing the sediment pre- and post-filters; monitoring for any water leaks in the system; recording the water meter volume; and monitoring the system pressure at the pressure tank, across the sediment filters, and across the GAC vessels.

Appendix B presents the OMM field form for use during monitoring and maintenance events. Appendix C.3 presents the maintenance and monitoring schedule for the treatment systems. Flow diagrams that identify equipment and monitoring points on the wellhead GAC treatment systems (i.e., pressure gauges, filters, GAC vessels, water meter, sampling spigot valves) are included in Appendix C.4. Water meter readings, pressure drop readings, backflush frequency, filter and GAC changes, and samples collected are to be noted on the OMM field form during each event.

4.3.1 Treatment System Maintenance

System maintenance is comprised of observing system components, recording operating parameters, and responding to observations and system parameters in such a way that effective system operation is maintained. Treatment system maintenance visits are to occur quarterly and coincide with water quality sampling, unless otherwise dictated by the OMM schedule in Appendix C.3. Observation of system components and recording operating parameters generally consists of:

- Recording water meter readout at the beginning and end of the visit;
- Visual inspection of sediment filters:
- Recording values from pressure gauges; and

- Recording flow rate during pressure gauge observation.

Water Meter Readings

Upon arriving on-site and prior to initiating maintenance activities, the value displayed on the water meter is to be recorded on the OMM field form. The value is to be recorded again after completing all maintenance and water quality sampling activities.

Sediment Filter Inspection

During each maintenance visit, the sediment pre- and post-filter housings and cartridges are to be visually inspected. Observations are to be made regarding whether the filter housing is cracked or leaking, and if the cartridge filters appear dirty or discolored. This information is to be recorded on the OMM field form.

Pressure Gauge Readings

The pressure drops across each sediment filter and GAC vessel are to be noted on the OMM field form during site visits by recording each value displayed on each pressure gauge while allowing a constant flow rate of water to run through the system. Pressure readings are to be collected as quickly as possible in an effort to approximate an instantaneous reading of all gauges. Roughly the same flow rate is to be used during each site visit to mimic a high water-use activity. This may be accomplished by fully opening a water use valve, such as a garden hose, and estimating the flow rate using the water meter and a stopwatch. This procedure should be repeated, and new readings recorded, after completing all necessary maintenance activities at the site that would affect pressure drops (e.g. backflushing and filter/GAC replacement).

Maintenance Activities

After observation of system components and recording operating parameters is complete, system maintenance, including sediment filter replacement and GAC backflushing may be appropriate. Pressure drops greater than 5 psi across a sediment filter indicate clogging. If a pressure drop greater than 5 psi across a sediment filter is observed, a filter replacement may resolve the problem.

Filter replacement frequency depends on both water usage and the amount of fine sediments in the groundwater extracted via the well pump. The pre-filter will likely require more frequent replacement than the post-filter. Filter replacements are to be noted on the

OMM field form. Filter replacement is described in Section 4.4, filter housing specifications are included in Appendix A.2, and the filter type initially installed at each system is described in Appendix C.2.

A manual GAC backflush may be initiated by holding down the UP and DOWN buttons on the face of the control valve for 3 seconds. During a manual backflush, the GAC being backflushed will be bypassed by water flowing to a point of use. Do not backflush both vessels simultaneously, so that at least one GAC bed is maintained within the path of water flowing to a point of use. During a backflush, ensure that the lines carrying backflush water will discharge to an appropriate location. More details on the control valve programming and function can be found in the WS1TC & WS1.25TC Programming Manual (Appendix A.5).

4.3.2 Treatment System Monitoring

Treatment system monitoring consists of collecting and analyzing water quality samples of both treated and untreated water at each system in order to evaluate the efficiency of contaminant removal. A GAC change-out is appropriate once removal efficiency of a COC exceeding AWQS in the influent of the lead GAC vessel decreases such that breakthrough occurs at 50% of the AWQS.

The current water quality sampling schedule for all treatment systems is provided in Appendix C.3. Generally, water quality samples will be collected quarterly from established GAC treatment systems. Newly installed treatment systems may be sampled more frequently during their first quarter of operation, if necessary. Sampling frequency at individual systems may change from quarterly, based on GAC breakthrough data collected over the lifetime operation of the systems.

Samples collected during system monitoring activities will generally be drawn from three sample ports. These sample ports are the influent (upstream of lead GAC vessel), midpoint (between lead and lag GAC vessels), and effluent (downstream of lag GAC vessel). These locations are identified on the flow diagrams included in Appendix C.4. Any additional, property-specific sample locations are included on the sampling schedule provided in Appendix C.3.

Water quality samples are collected in pre-preserved, laboratory-supplied vials. After samples are collected, they are stored on ice then submitted to a qualified analytical laboratory under chain of custody for analysis of VOCs by EPA Method 8260B. Samples

are to be labeled such that the address of the treatment system, date of sample collection, and port from which the sample was collected appear in the sample identification. Samples collected from the:

- Influent sample port include “IN” in the sample identification;
- Midpoint sample port include “MID” in the sample identification; and
- Effluent sample port include “EFF” in the sample identification.

A GAC change-out of the lead vessel shall be conducted if the following two criteria are met for at least one COC:

1. The concentration of the COC exceeds or likely exceeds its AWQS at the influent of the lead GAC vessel; and
2. The concentration of the COC exceeds 50% of its AWQS in breakthrough from the lead GAC vessel.

Table 1 provides lead vessel GAC change-out criteria based on concentrations of COCs detected in influent to (influent sample), and effluent from (midpoint sample), the lead GAC vessel.

Table 1 – GAC Change-Out Concentration Criteria

Contaminant of Concern	Influent GAC Change-Out Threshold Concentration (µg/L)	Midpoint GAC Change-Out Threshold Concentration (µg/L)
Tetrachloroethene (PCE)	5	2.5
Trichloroethene (TCE)	5	2.5
cis-1,2-Dichloroethene (*cis*-1,2-DCE)	70	35

Notes:
Influent GAC Change-Out Threshold Concentration is 100% of the respective Aquifer Water Quality Standard for each compound.
Effluent GAC Change-Out Threshold Concentration is 50% of the respective Aquifer Water Quality Standard for each compound.
µg/L – micrograms per liter
GAC – granular activated carbon

If a change-out is performed, the lead GAC vessel is to be replaced and the lead/lag vessel process order is to be switched. See Section 4.5 for carbon change-out procedures. Aquacarb® 1230AWC coconut shell GAC (vendor literature provided in Appendix A.4) is recommended for GAC replacement.

4.3.3 Reporting

Reports summarizing OMM activities will be prepared on at least an annual basis. These reports will include a summary of all OMM tasks performed, data collected, sampling results, GAC and filter change-outs, and backflushes. Details of system data collected during OMM shall be recorded in a spreadsheet containing both current and historical OMM system data. Copies of OMM field forms and laboratory reports for the reporting period are to be attached to each report as appendices. Digital copies of each report will be provided to ADEQ, including native file formats (MS Word, Excel, shape files, etc.). Digital copies will be provided to well owners and system operators via email if possible, and physical copies via regular mail if email is not possible.

4.4 Pre- and Post-Filter Replacement Procedures

Prior to opening filter housing for a filter replacement, the filter must be isolated from the pressure tank and plumbing that distributes water to various points of use, then the water pressure within the isolated portion of the system must be bled off. Both sediment filters may be isolated by closing the valve upstream of the pre-filter and the valve downstream of post-filter. Pressure may be relieved in the isolated portion of the system by pressing the pressure relief button on the top of the filter housing, or running water out of a sampling port spigot within the isolated zone for 2–3 minutes. Relieving pressure will cause water to escape the system, so a bucket may be placed such that it contains the water escaping during pressure relief.

After pressure has been relieved, the filter housing may be opened and the filter can be inspected and/or replaced. Place a bucket under the filter that is being changed to catch water that will escape the system when the filter housing is opened. Immediately prior to interacting with the inside of the filter housing, don new nitrile gloves to mitigate introduction of external contaminants into the system. To open the filter housing, unscrew the blue chamber using the plastic wrench that was provided with each filter housing. Remove the used filter. If necessary, clean the inside of the blue chamber with mild soapy water and then thoroughly rinse it. Place the new filter in the center of the blue chamber. Clean the housing O-ring and lubricate it with silicone grease. Do not use petroleum jelly or any similar grease as lubrication on the system or O-rings. Reseat the O-ring into the proper groove and reattach the housing chamber by screwing it back into the top housing piece. Allow flow to resume through the system by opening the valves that were closed to isolate the filters. Run water from a nearby spigot or garden hose to bleed air from the system, and then check for leaks. Filter housing specifications are included in Appendix A.2. The filter type initially installed at each system is described in Appendix C.2.

4.5 Carbon Change-Out Procedures

To changeout the GAC, first bypass flow to the vessel being changed by positioning the arrows on the Clack control valve inlet and outlet towards each other (see control valve manual in Appendix A.5). Note that untreated water flows to the property if both GAC vessels are bypassed.

Immediately prior to interacting with the inside of the GAC vessel, don new nitrile gloves to mitigate introduction of external contaminants into the system. Remove the control

valve from the top of the vessel. Drain the water in the vessel by siphoning from the top of the discharge tube, or tip the vessel over a bucket to catch the water. Remove the discharge tube. The spent GAC is to be collected in sealable buckets or drums. The spent GAC will be sampled, analyzed and profiled prior to disposal, if necessary, then transported for recycling or disposal by an appropriate (hazardous) waste management company. Once spent GAC is removed from the vessel, rinse the inside of the vessel and the discharge tube, making sure all GAC has been purged form the container.

Place the discharge tube back into the empty vessel and cover the opening at the top of the tube. The tube may be covered with tape, plastic, a nitrile glove, etc., but the covering needs to be clean and prevent the addition of new carbon from entering the discharge tube. Insert a funnel into the top of the open vessel. Prior to using the funnel to add new GAC, a National Institute for Occupational Safety and Health approved face mask needs to be worn when handling dry GAC to avoid inhalation of fine particles, which can cause respiratory irritation. Slowly pour the new GAC into the funnel. The volume of GAC to be added to each system is included in Appendix C.2. Remove the funnel and rotate the discharge tube slightly to center it. Remove the covering from the discharge tube, and reattach the Clack control valve.

The GAC needs to be soaked for at least 24 hours and then backflushed before normal operation. To soak the newly added GAC, open the sampling port spigot between the GAC vessels (midpoint sampling port), and then reposition the arrows on the Clack control valve to normal operation (pointing into the vessel on the inlet, out on the outlet). Let water flow into the vessel just until water flows out of the midpoint sampling port spigot. Close the spigot and reposition the Clack control valve arrows toward each other so the vessel is bypassed, allowing water to flow through the lag vessel to the water user. Allow the GAC to soak for 24 hours. The lag vessel will remove VOC contaminants from the groundwater stream for this 24-hour period. After beginning the 24-hour soak, the GAC vessel order needs to be switched. Accomplish this by manipulating the manifold valves so that groundwater flows first through what was previously the lag vessel, and then through the vessel containing new GAC (Figure 3), but leave the Clack control valves positioned such that the newly changed GAC is bypassed until completion of soaking.

After the 24-hour soaking period, the newly-filled vessel needs to be backflushed. To backflush the vessel with fresh GAC, reposition the arrows on the Clack control valve into normal operating mode (pointing into the vessel on the inlet, out on the outlet), and manually engage a backflush by holding the UP and DOWN buttons on the Clack control

valve for 3 seconds. After the backflush has been completed, normal operating flow through the carbon vessel will automatically resume. If both vessels need to be backflushed, complete the procedures at the vessel with new carbon before starting the next.

5. REFERENCES

Evoqua Water Technologies, 2019, Liquid phase design breakthrough modeling. Email correspondence from Mark DeLaurentis Sr, ProAct Environmental Solutions August 21, 2019.

Evoqua Water Technologies, 2020, Carbon Bed Efficiency Technical Note 31. Email correspondence from Mark DeLaurentis Sr, ProAct Environmental Solutions May 8, 2020.

HGC, 2020, Granular Activated Carbon Treatment Systems Installation and Sampling, Highway 260 and Main Street WQARF Site, Cottonwood, Arizona: Technical Memorandum, June 25, 2020.

FIGURES

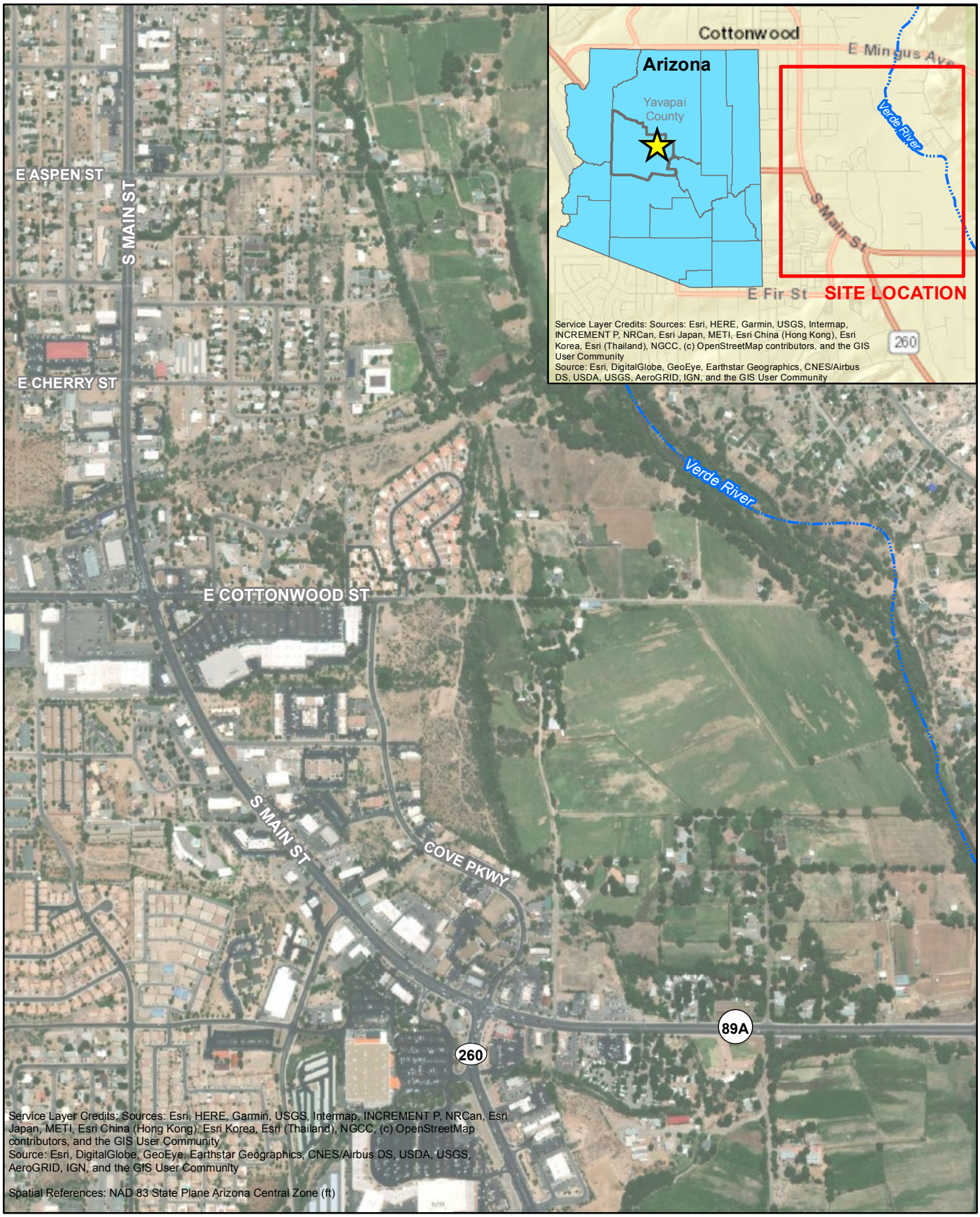

0 250 500
SCALE IN FEET
N

HYDRO GEO CHEM, INC.

SITE LOCATION
HIGHWAY 260 & MAIN ST WQARF SITE
COTTONWOOD, AZ

Approved	Date	Author	Date	File Name	Figure
AJB	6/17/20	MRW	6/17/20	20170180304G	1

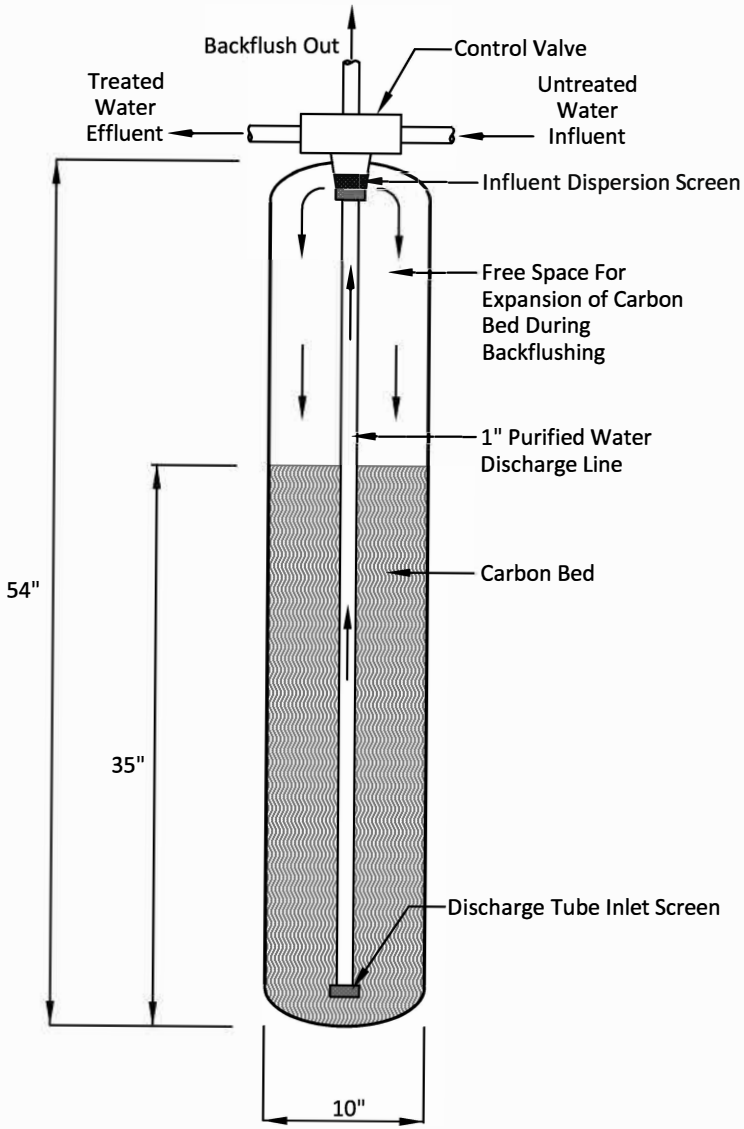

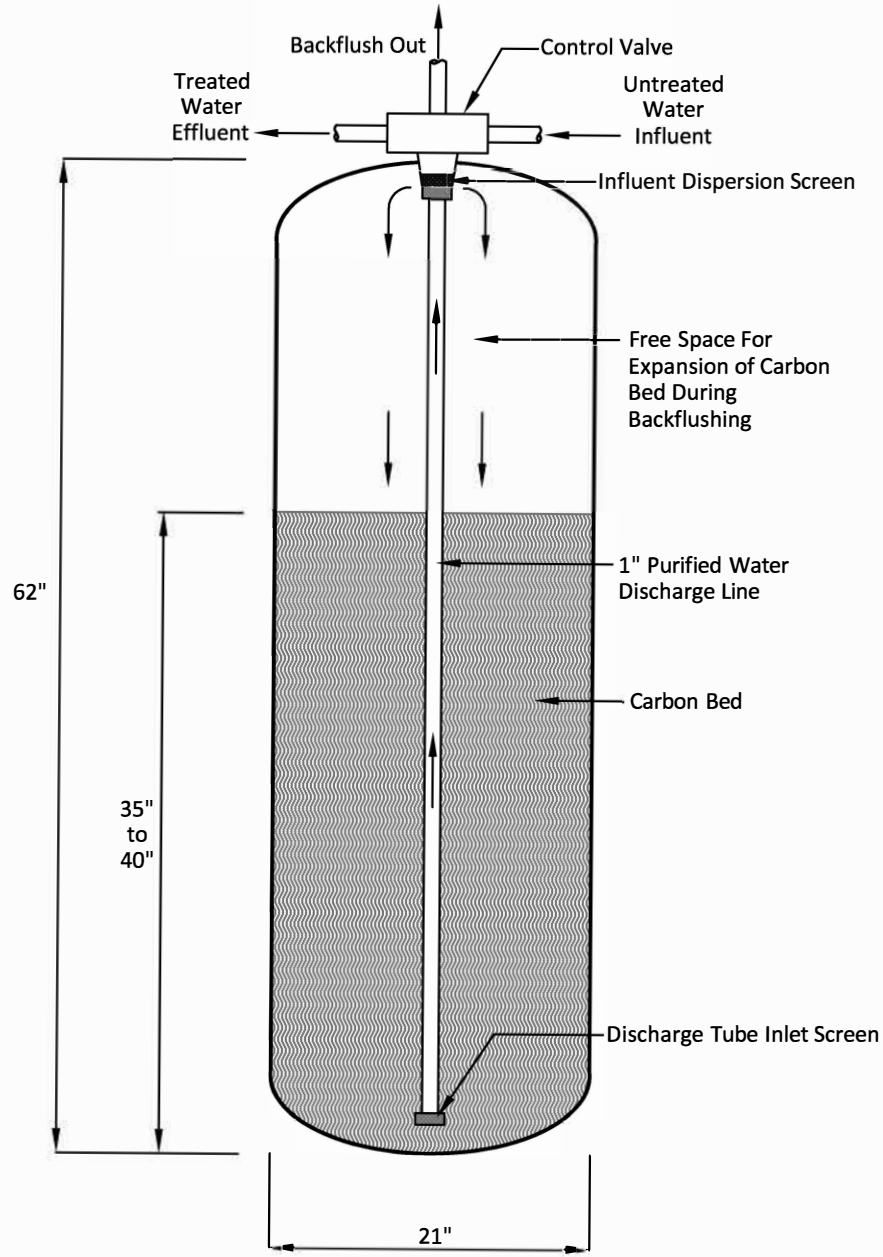

0' 0.5' 1'
APPROXIMATE SCALE IN FEET

HYDRO GEO CHEM, INC.

ULTIMA VESSEL SCHEMATIC
HIGHWAY 260 AND MAIN STREET WQARF SITE
COTTONWOOD, ARIZONA

Approved	Date	Author	Date	File Name	Figure
CF	6/23/20	JAA	6/23/20	2017018015A	2

Figure 3 - GAC Vessel Manifold Diagram

GAC Vessel A as Lead Manifold Valve Settings

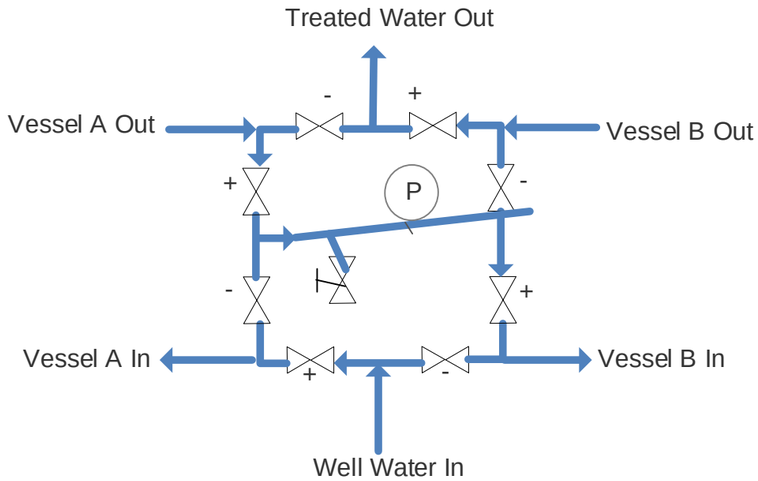

GAC Vessel A Only Manifold Valve Settings

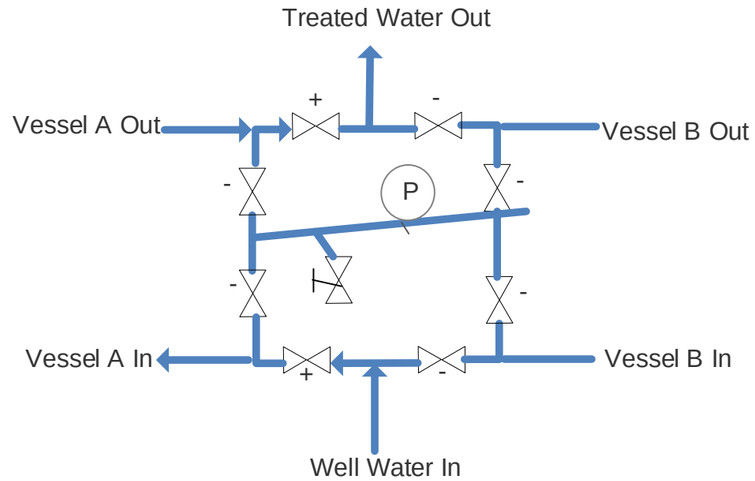

GAC Vessel A & B Bypassed Manifold Valve Settings

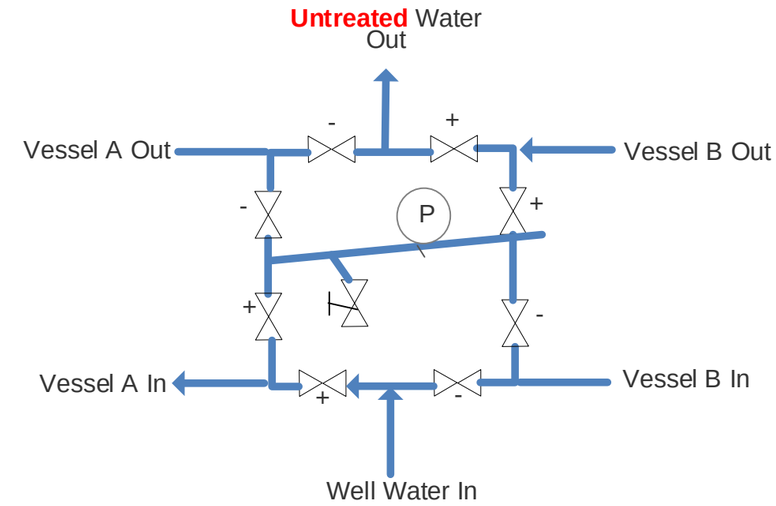

GAC Vessel B as Lead Manifold Valve Settings

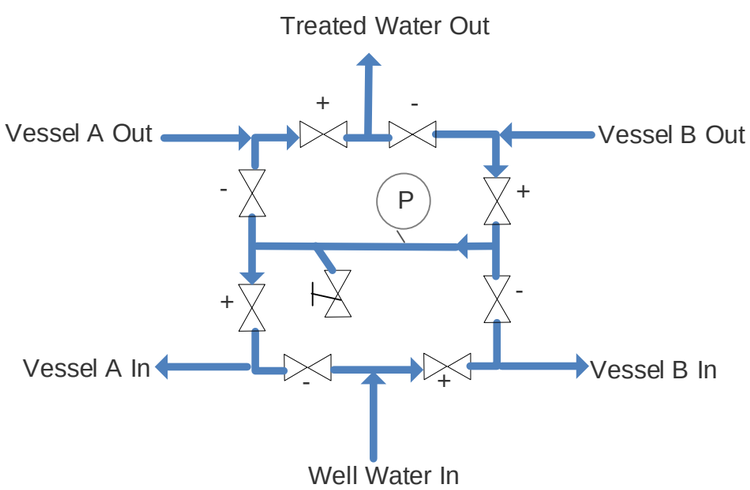

GAC Vessel B Only Manifold Valve Settings

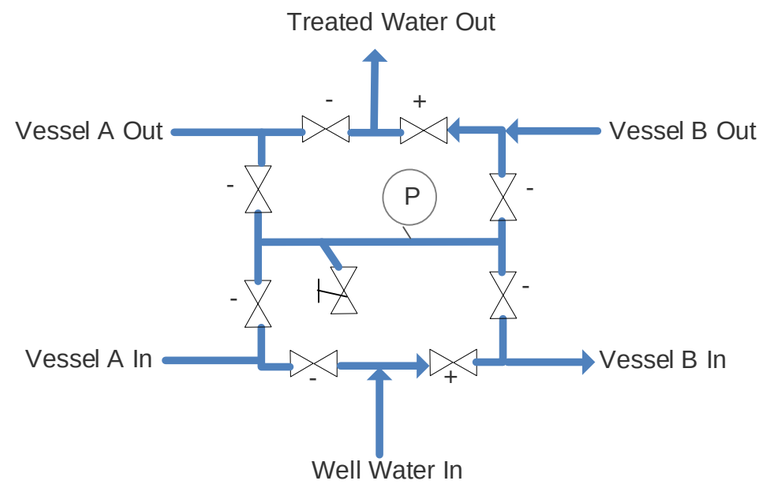

LEGEND

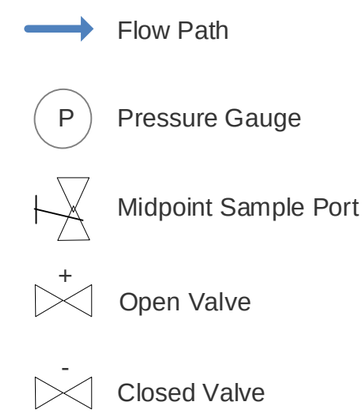

APPENDIX A

COMPONENT INFORMATION, SPECIFICATIONS, AND MANUALS

APPENDIX A.1

GRANULAR ACTIVATED CARBON VESSEL SPECIFICATIONS

ULTIMA

Water Specialist Carbon Filter

MADE IN THE U.S.A.
WITH PRIDE

What Does a Whole house Carbon Filter Remove?

Coconut Shell Activated Carbon is used extensively in water treatment due to its high Porosity and large surface area. Unsafe levels of chlorine, sediment, and other chemicals can be found in some municipal water supplies. Even controlled levels of chlorine can have side effects such as dry skin.

The Ultima system removes all the chlorine from the water along with **reducing or removing** the following substances.

- **VOC's and Cleaning By-Products**
- **Chlorine**
- **Pesticides and Herbicides**
- **Dirt and Sand**

Carbon Filter Benefits

No More Dry Skin

Little or No Maintenance

Clean Filtered Water Throughout your home

Better Tasting and Smelling Water

Can Reduce Allergies Associated With Chlorine

Coconut Carbon is an Eco-Friendly Renewable Resource

The Ultima Backwash Carbon Filter. Easy and Versatile

- The 1″ flow-through valve meets NSF/ANSI 44 requirements. It's ideal for larger homes because it supplies more water with less pressure drop.
- The system's composite material is durable and corrosion-resistant.
- Cycles are fully adjustable so setting are customized for your needs.
- Designed with a minimum number of moving parts means easy maintenance.
- Programming stored in memory cannot be lost due to power outages.
- 5 Year Warranty on all hardware

Ultima Carbon Filter Specifications

Model#	Tank Size	Drain Flow	Carbon Cu. Ft.
CLKCF10	9 x 48	4.0 gpm	1
CLKCF15	10X54	5.0 gpm	1.5
CLKCF20	12 x 52	7.0 GPM	2

APPENDIX A.2

WATTS SEDIMENT FILTER SPECIFICATIONS

For Residential and Light Commercial Applications

Job Name _____ Contractor _____

Job Location _____ Approval _____

Engineer _____ Contractor's P.O. No. _____

Approval _____ Representative _____

Plastic Filter Housings

Top Quality and Economical Plastic Filter Housings

Single Cartridge Filter Housings

Sizes: ¼" – 1½"

Our poly filter housings are manufactured from the highest quality 100% polypropylene (polystyrene for clear housings). Leak-proof sealing is accomplished by compression against a top seated EPDM O-ring located in the housing's sump. Thick wall and added ribs make the housings ideal for a wide range of applications. Polypropylene construction provides excellent chemical resistance in most installations environments. Housings supplied with pressure relief valves. See specifications table for pressure and temperature ratings.

Full product line

We offer a complete line of filter housings for virtually every application where single cartridge housings are typically used. Select from standard, heavy-duty, full-flow, high-temp and valve-in-head models.

Features

- Full product line for more types, models, pipe fittings and options
- Heavy-duty construction, made using high-quality grade polypropylene and acrylonitrile styrene (for clear housings).
- Superior chemical resistance from many aggressive chemicals
- Buttress thread design for superior security
- Thick side walls with heavy-duty ribs to provide greater strength
- Temperature rated to 100° F/37.8 ° C
- Cap, sump and top-seated O-rings compress to provide leak proof sealing

See specifications table for more details.

Buttress thread design — Provides greater security

Heavy-duty construction — Housings are made entirely of the highest quality grade polypropylene and acrylonitrile styrene (for clear housings).

NOTICE

The information contained herein is not intended to replace the full product installation and safety information available or the experience of a trained product installer. You are required to thoroughly read all installation instructions and product safety information before beginning the installation of this product.

⚠ WARNING

Do not use with water that is microbiologically unsafe or of unknown quality without adequate disinfection before or after the system.

Dimensions

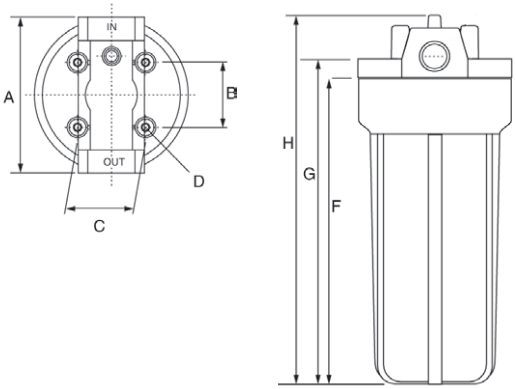

HOUSING TYPE	SIZE	DIMENSIONS													
		A		B		C		D		F		G		H	
	in.	*in.*	*mm*	*in.*	*mm*	*in.*	*mm*	*in.*	*mm*	*in.*	*mm*	*in.*	*mm*	*in.*	*mm*
Standard (white)	5	4.28	108	1.57	40	1.18	30	0.16	4	5.7	145	7	178	7.5	191
Standard (blue)	10	4.72	120	1.57	40	1.18	30	0.16	4	10.5	267	11.0	279	11.8	300
Standard (clear)	10	4.72	120	1.57	40	1.18	30	0.16	4	10.5	267	11.0	279	11.8	300
Standard	20	4.72	120	1.57	40	1.18	30	0.16	4	20.47	520	21.26	540	22.8	579
High Temp	10	5.35	136	2.22	56	2.28	58	0.23	6	10.43	265	11.49	292	12.5	318
High Temp	20	5.35	136	2.22	56	2.28	58	0.23	6	20.47	520	21.26	540	22.8	579
Commercial	10	5.35	136	2.22	56	2.28	58	0.23	6	10.43	265	11.49	292	12.5	318
Commercial	20	5.35	136	2.22	56	2.28	58	0.23	6	20.47	520	21.26	540	22.8	579
Full Flow (FF)	10	7.28	186	3.03	77	3.03	77	0.275	7	11.33	288	11.57	294	14.0	356
Full Flow (FF)	20	7.28	186	3.03	77	3.03	77	0.275	7	21.25	540	21.65	550	24.0	25

Full Flow (FF) Series (10" and 20")

High Temp (10" and 20")

Blue/Black (10" and 20")

Clear (10")

Specifications

Material, sumps & caps	High grade polypropylene. (polystyrene for clear housings).
Material, o-rings	EPDM is standard
Maximum temperature (standard)	100°F (37.8°C)
Maximum temperature (high temp)	200°F (93°C)
Maximum temperature (full flow) and (valve in head)	100°F (37.8°C)
Minimum temperature	40°F (4°C)
Maximum pressure (standard blue)	100psi (6.9 bar)
Maximum pressure (standard clear)	125 psi (8.6 bar)
Maximum pressure (full flow)	100psi (6.9 bar)
Maximum pressure (valve in head)	100psi (6.9 bar)
Burst test	Tested to 500psi. (150,000 cycles from 0 to 125psi)

Individually Boxed Plastic Housings in Master Cartons

MODEL NO.	ORDERING CODE	SIZE	PIPE	TYPE	SUMP	CAP	CASE QTY.
PWHIB34WVIH*	7100550	10"	3/4"	Valve-In-Head	White	White	4
PWHIB10FF*	7100268	10"	1"	Full Flow (FF)	Blue	Black	4
PWHIB20FF*	7100269	20"	1"	Full Flow (FF)	Blue	Black	4

*Complete housing kit with housing, mounting bracket & screws, housing wrench

PWHIB10FF

Indivisually Boxed Plastic Housing with Filter Cartridge in Master Cartons

MODEL NO.	ORDERING CODE	SIZE	PIPE	TYPE	SUMP	CAP	CASE QTY.
PWHIB10FFC**	7100679	10"	1"	Full Flow (FF)	Blue	Black	4

** Complete housing kit with housing, mounting bracket & screws, houisng wrench and 5 micron pleated cartridge
For additional information on pleated filter cartridges options, access online literature ES-WQ-PWPL

PWHIB10FFC

Poly Filter Housing

MODEL NO.	ORDERING CODE	SIZE	PIPE	SUMP	CAP	# CASE
5" Residential Housing						
PWHP512W	7100589	5"	½"	White	White	12
10" Residential Housings						
PWHP1034CPR	7100554	10"	¾"	Clear	White PR	4
PWHP1014BPR	7100277	10"	¼"	Blue	Black PR	4
PWHP1012BPR	7100279	10"	½"	Blue	Black PR	4
PWHP1034BPR	7100281	10"	¾"	Blue	Black PR	4
20" Residential Housings						
PWHP2012BPR	7100283	20"	½"	Blue	Black PR	6
10" Commercial Housings						
PWHP10COM34BPR	7100669	10"	¾"	Blue	6	6
20" Commercial Housings						
PWHP20COM34BPR	7100670	20"	¾"	Blue	6	6
10" Full Flow Housings						
PWHP10FF34BPR	7100286	10"	¾"	Blue	Black PR	4
PWHP10FF1BPR	7100288	10"	1"	Blue	Black PR	4
PWHP10FF15BPR	7100290	10"	1½"	Blue	Black PR	4
20" Full Flow Housings						
PWHP20FF34BPR	7100291	20"	¾"	Blue	Black PR	4
PWHP20FF1BPR	7100293	20"	1"	Blue	Black PR	4
PWHP20FF15BPR	7100295	20"	1½"	Blue	Black PR	4
High Temp Housings (200°F / 93°C)						
PWHPHT1034	7100296	10"	¾"	Red	Red	4
PWHPHT2034	7100297	20"	¾"	Red	Red	4

MODEL NO.	ORDERING CODE	SIZE/TYPE	# CASE
Mounting Brackets - includes housing mounting screws			
PWMBVIH	7300605	Brkt, VIH Housing	1
PWMBSTD1	7100463	Single, 10" & 20" Residential Housings	1
PWMBSTD2	7100464	Double, 10" & 20" Residential Housings	1
PWMBSTD3	7100465	Triple, 10" & 20" Residential Housings	1
PWMBCOM1	7300808	Single 10" & 20" Commercial Hsg	1
PWMBFF1	7100466	Single, 10" & 20" Full Flow Housing	1
PWMBFF2	7100467	Double, 10" & 20" Full Flow Housing	1
PWMBFF3	7100468	Triple, 10" & 20" Full Flow Housing	1
Wrenches			
PWWRSTDHSG	7100298	Wrench for Residential Housings	1
PWWRFFHSG	7100299	Wrench for Full Flow Housing	1
PWWRHTHSG	7300618	Hi Temp Housing Wrench	1
PWWRCOM	7300806	Wrench for Commercial Housing	1
PWWRDUAL	7100300	Dual Wrench for Membrane and Residential Filter Housings	1
PWWRVIHHSG	7300875	Wrench for Valve-In-Head (VIH) Housing	1
Mounting Screws			
PWMSSTDHSG	7300393	Mounting Screws for Standard Housings	1
PWMSFFHSG	7300395	Mounting Screws for Full Flow Housings	1
PWMSCOMHSG	7300809	Mounting Screws for Commercial Housings	1
O-Rings			
PWORSTDHSG	7300397	O-Ring for standard blue housings	1
PWORCSTDHSG	7300915	O-RIng for standard clear housing	1
PWORFFHSG	7300398	O-Ring for Full Flow housings	1
PWORHTHSG	7300399	O-Ring for high temp housings	1
PWORCOMHSG	7300807	O-Ring for Commercial Housings	1
PWORVIHHSG	7300876	O-Ring for Valve-In-Head (VIH) Housing	1

USA: T: (800) 224-1299 • F: (978) 794-1848 • Watts.com/PureWater
Canada: T: (888) 208-8927 • F: (888) 479-2887 • Watts.ca/PureWater
Latin America: T: (52) 55-4122-0138 • Watts.com/PureWater

APPENDIX A.3

WATER METER SPECIFICATIONS

ARB® UTILITY MANAGEMENT SYSTEMS™

NEPTUNE TECHNOLOGY GROUP

T-10™ METER

SIZES: 5/8", 3/4", and 1"

Every T-10™ water meter meets or exceeds the latest AWWA C700 Standard. Its nutating disc, positive displacement principle has been time-proven for accuracy and dependability since 1892, ensuring maximum utility revenue.

T-10™ water meters are warranted for performance, materials, and workmanship.

CONSTRUCTION

The T-10 water meter consists of three major assemblies: a register, a lead free, high-copper alloy maincase, and a nutating disc measuring chamber.

The T-10 meter is available with a variety of register types. For reading convenience, the register can be mounted in one of four positions on the meter.

The corrosion-resistant, lead free, high-copper alloy maincase will withstand most service conditions; internal water pressure, rough handling, and in-line piping stress.

The innovative floating chamber design of the nutating disc measuring element protects the chamber from frost damage while the unique chamber seal extends the low flow accuracy by sealing the chamber outlet port to the maincase outlet port. The nutating disc measuring element utilizes corrosion-resistant materials throughout and a thrust roller to minimize wear.

WARRANTY

Neptune provides a limited warranty with respect to its T-10 water meters for performance, materials, and workmanship.

When desired, maintenance is easily accomplished either by replacement of major assemblies or individual components.

GUARANTEED SYSTEMS COMPATIBILITY

All T-10 water meters are guaranteed adaptable to our ARB®V, ProRead™ (ARB VI) AutoDetect, E-Coder® (ARB VII), E-Coder®)R900*i*™, E-Coder®)R450*i*™, TRICON®/S, TRICON/E®3, and Neptune meter reading systems without removing the meter from service.

KEY FEATURES

- Register
  - Magnetic drive, low torque registration ensures accuracy
  - Impact-resistant register
  - High resolution, low flow leak detection
  - Bayonet-style register mount allows in-line serviceability
  - Tamperproof seal pin deters theft
  - Date of manufacture, size, and model stamped on dial face
- Lead Free Maincase
  - Made from lead free, high-copper alloy
  - NSF/ANSI 372 certified and NSF/ANSI 61 compliant
  - Lifetime guarantee
  - Resists internal pressure stresses and external damage
  - Handles in-line piping variations and stresses
  - Lead free, high-copper alloy provides residual value vs. plastic or composite
  - Electrical grounding continuity
- Nutating Disc Measuring Chamber
  - Positive displacement
  - Widest effective flow range for maximum revenue
  - Proprietary polymer materials maximize long-term accuracy
  - Floating chamber design is unaffected by meter position or in-line piping stresses

SYSTEMS COMPATIBILITY

Adaptability to all present and future systems for flexibility is available only with Neptune's ARB® Utility Management Systems™.

5/8" ACCURACY

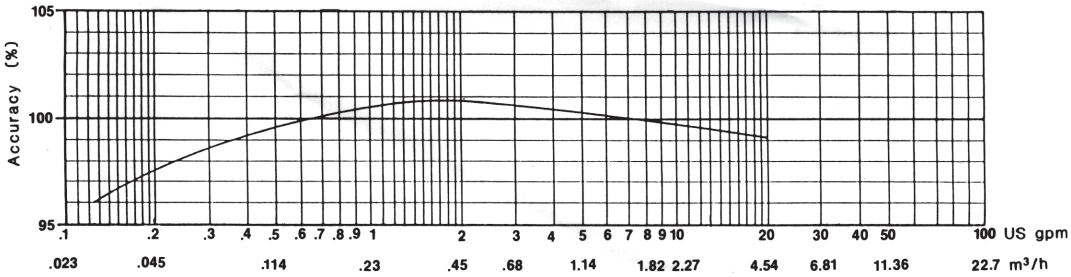

3/4" ACCURACY

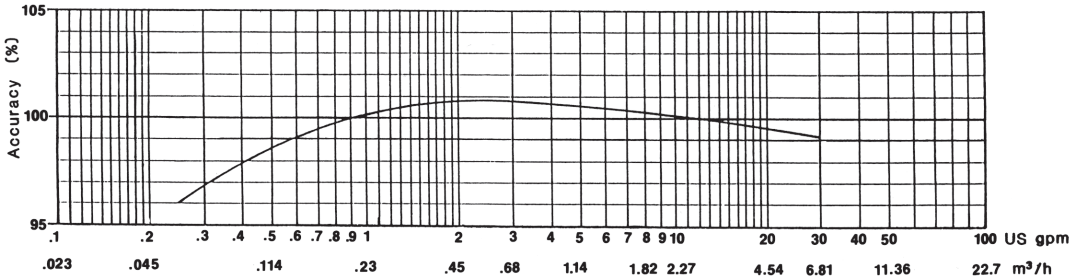

1" ACCURACY

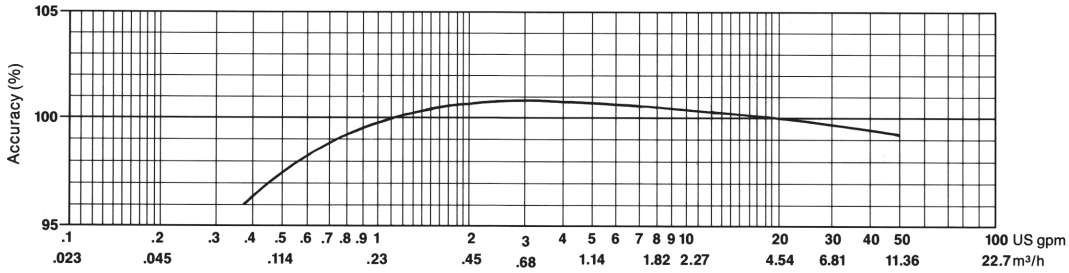

DIMENSIONS

Meter Size	A in/mm	B in/mm	C-Std. in/mm	C-ARB in/mm	C E-Coder®) R900*i*™	D Threads per inch	D-OD in/mm	E in/mm	F in/mm	Weight lbs/kg
5/8"	7 1/2 191	3 5/8 92	4 3/8 111	5 1/4 133	6 7/8 175	14	1.03 26	1 1/2 38	2 1/2 64	3 1/4 1.4
5/8" x 3/4"	7 1/2 191	3 5/8 92	4 3/8 111	5 1/4 133	6 7/8 175	11 1/2	1.29 33	1 1/2 38	2 5/8 67	3 3/8 1.5
Circa 2011 5/8"	7 1/2 191	3 5/8 92	4 7/8 124	5 3/4 146	7 3/8 187	14	1.03 26	1 5/8 41	2 1/2 64	3 3/4 1.7
Circa 2011 5/8" x 3/4"	7 1/2 191	3 5/8 92	4 7/8 124	5 3/4 146	7 3/8 187	11 1/2	1.29 33	1 5/8 41	2 5/8 67	4 1.8
3/4"	9 229	4 3/8 111	5 1/2 140	6 1/4 159	7 7/8 200	11 1/2	1.29 33	1 7/8 48	2 5/8 67	6 2.7
3/4" SL	7 1/2 911	4 3/8 111	5 1/2 140	6 1/4 159	7 7/8 200	11 1/2	1.29 33	1 7/8 48	2 5/8 67	5 1/2 2.5
3/4" x 1"	9 229	4 3/8 111	5 1/2 140	6 1/4 159	7 7/8 200	11 1/2	1.62 41	1 7/8 48	2 3/4 70	6 1/2 2.9
1"	10 3/4 273	6 1/2 165	6 3/8 162	7 1/8 181	8 3/4 222	11 1/2	1.62 41	2 1/8 54	2 3/4 70	9 3/4 4.4
1" x 1 1/4"	10 3/4 273	6 1/2 165	6 3/8 162	7 1/8 181	8 3/4 222	11 1/2	1.86 47	2 1/8 54	2 13/16 71	10 1/4 4.6

5/8" PRESSURE LOSS

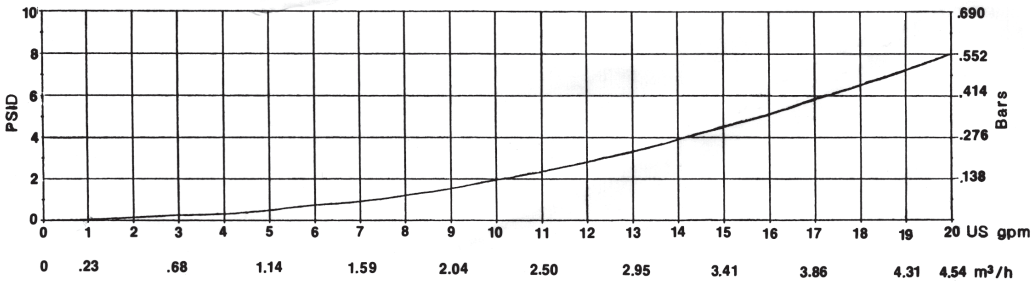

3/4" PRESSURE LOSS

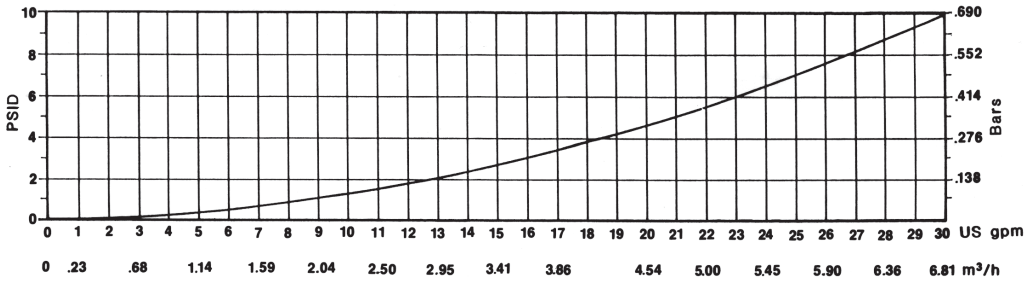

1" PRESSURE LOSS

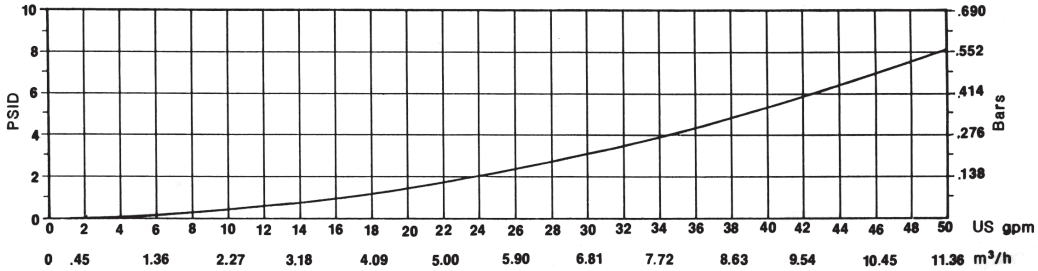

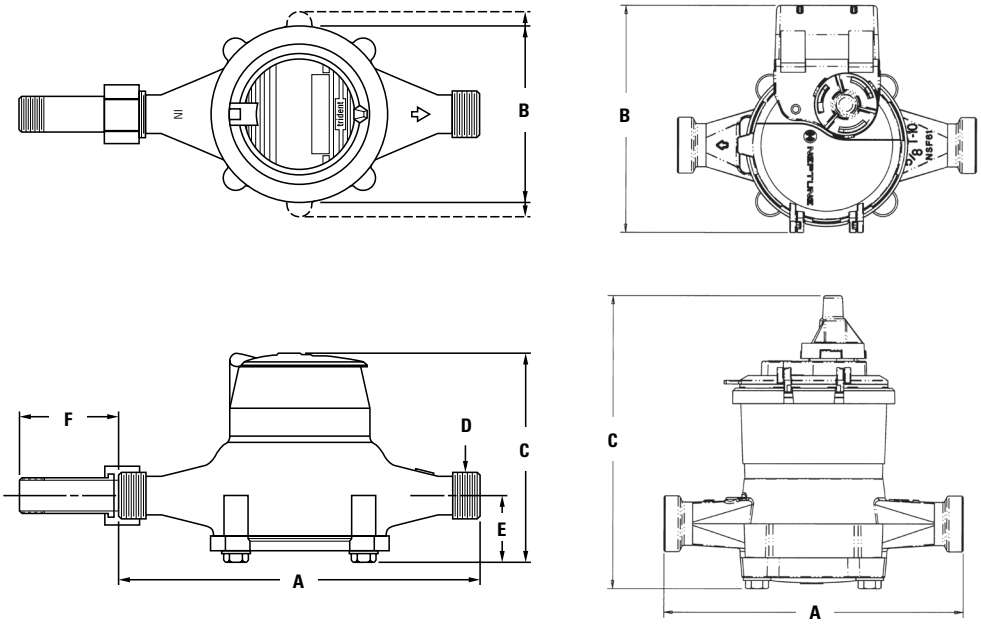

OPERATING CHARACTERISTICS:

Meter Size	Normal Operating Range @ 100% Accuracy (+/- 1.5%)	AWWA Standard	Low Flow @ 95% Accuracy
⅝"	1/2 to 20 US gpm 0.11 to 4.55 m^3/h	1 to 20 US gpm 0.23 to 4.5 m^3/h	⅛ US gpm 0.03 m^3/h
¾"	3/4 to 30 US gpm 0.17 to 6.82 m^3/h	2 to 30 US gpm 0.45 to 6.8 m^3/h	¼ US gpm 0.06 m^3/h
1"	1 to 50 US gpm 0.23 to 11.36 m^3/h	3 to 50 US gpm 0.68 to 11.4 m^3/h	⅜ US gpm 0.09 m^3/h

REGISTRATION:

Pro Read Registration (per sweep hand revolution)		⅝"	¾" & 1"
10	US Gallons	√	√
10	Imperial Gallons	√	√
1	Cubic Foot	√	√
0.1	Cubic Metre	√	√
0.01	Cubic Metre	√	

Register Capacity ProRead & E-Coder		⅝"	¾" & 1"
10,000,000	US Gallons	√	√
10,000,000	Imperial Gallons	√	√
1,000,000	Cubic Feet	√	√
100,000	Cubic Metres	√	√
10,000	Cubic Metres	√	

E-Coder High Resolution (8-digit reading)		⅝"	¾" & 1"
0.1	US Gallons	√	√
0.1	Imperial Gallons	√	√
0.01	Cubic Feet	√	√
0.001	Cubic Metres	√	√

SPECIFICATIONS

- NSF/ANSI 372 certified and NSF/ANSI 61 compliant
- National Type Evaluation Program (NTEP) certification
- Application: Cold water measurement of flow in one direction in residential service applications
- Maximum operating water pressure: 150 psi (1034 kPa)
- Maximum operating water temperature: 80°F
- Measuring chamber: Nutating disc technology design made from proprietary synthetic polymer

OPTIONS

- Sizes:
  - ⅝", ⅝" x ¾"
  - ¾", ¾" SL, ¾" x 1"
  - 1", 1" x 1 ¼"
- Units of measure: U.S. gallons, imperial gallons, cubic feet, cubic metres
- Register types:
  - Direct reading: bronze box and cover (standard)
  - Remote reading: ProRead Encoder, E-Coder, E-Coder)R900*i*, E-Coder)R450*i*, TRICON/S, TRICON/E3
  - Reclaim
- Bottom caps:
  - Synthetic polymer (⅝" only)
  - Cast iron
  - Lead free, high-copper alloy
- Connections:
  - Lead free, high-copper alloy, straight or bent
- Environmental conditions:
  - Operating temperature: 33° F to 149° F (0° C to 65° C)
  - Storage temperature: 33° F to 158° F (0° C to 70° C)

Neptune Technology Group Inc.
1600 Alabama Highway 229
Tallassee, AL 36078
USA
Tel: (800) 633-8754
Fax: (334) 283-7293

Neptune Technology Group (Canada) Ltd.
7275 West Credit Avenue
Mississauga, Ontario
L5N 5M9
Canada
Tel: (905) 858-4211
Fax: (905) 858-0428

Neptune Technology Group Inc.
Ejército Nacional No. 418
Piso 12, Desp. 1201-1202
Col. Chapultepec Morales
Delegación Miguel Hidalgo
11570 México, Distrito Federal
Tel: (525) 55203 5294 / (525) 55203 5708
Fax: (525) 55203 6503

NEPTUNE TECHNOLOGY GROUP

neptunetg.com

Flows.com Flow Measurement Solutions

WM-NLC Lead-Free Brass Water Meters

Certified to NSF/ANSI 61-G

Description

The WM-NLC Series meter is a multijet dry-type totalizing water meter available in sizes from 1/2" to 2". It is produced in an ISO9001 certified production facility and is constructed in conformance with AWWA C708 standards. The product complies with NSF/ANSI 61 Annex G and conforms with lead-free plumbing as defined by California, Vermont, Maryland and Louisiana state laws and the U.S. Safe Drinking Water Act that took effect January, 2014. It is an ideal choice for a range of municipal and industrial water metering applications.

Water flows through the meter's internal inlet strainer and into the measuring chamber where it drives the impeller. A driving magnet transmits the movement of the impeller to a driven magnet located within the sealed register. The magnet is connected to a gear train which translates the impeller rotations into volume totalizers displayed on the meter's register dial face.

The WM-NLC Series water meter is top loaded and consists of three basic components: main case, measuring chamber, and head ring. The main cases of all sizes are constructed using C87850 low-lead brass alloy.

Features

- All parts in contact with water are constructed of corrosion resistant materials
- Body and coupling are made with low-lead brass alloy C87850 and meets potable water standards
- Impeller is the only moving part in contact with water, giving the meter long life and consistant, reliable operation
- Extra filter at the inlet of the meter body permits cleaning without having to open the meter
- Dial plate design in US Gallons
- Optional lead-free check valve to avoid reverse flow
- Optional pulse output consisting of plastic housing with 2-wire (red and black) reed switch and cable

Specifications

Pressure: up to 150 PSIG

Temperature: up to 122°F

Maximum Reading:

9,999,999.99 (sizes 050 to 100)
99,999,999.9 (sizes 150 & 200)

Accuracy:

Normal flow: +/- 1.5%
Low flow: +/- 3%

Materials of Construction: Lead Free Brass

Optional Pulse Output

Sensor Type: Dry contact Reed switch
Pulse Rates: varies with size *(see ordering information)*
Max. Current: 10mA
Max. Voltage: 24 VAC/DC
Cable Length: 5' standard (2000' maximum run)

WM-NLC Lead-Free Brass Water Meters

Sizes & Flow Rates (in gpm)

Size	Normal	Low	High
050	1 to 20	0.25	20
075	1 to 20	0.25	20
100	3 to 50	0.75	50
150	5 to 100	1.50	100
200	8 to 160	2.00	160

Model Code for Ordering

WM-NLC-050-R/1P

Water Meter

Body Material
NLC = Lead Free Brass

Line Size
050 = 1/2" NPT
075 = 3/4" NPT
100 = 1" NPT
150 = 1 1/2" NPT
200 = 2" NPT

Pulse Output *(optional)*
Omit = None
R/1P = 1 pulse per gallon (050, 075, 100)
R/2P = 2 pulse per gallon (050, 075, 100)
R/10P = 10 pulse per gallon (075, 100)
R/20P = 20 pulse per gallon (075, 100)
R/10G = 1 pulse per 10 gallons (150, 200)
R/5G = 1 pulse per 5 gallons (150, 200)

Dimensions & Weights (in inches & lbs.)

Size	NPT (male)	A	B	C	D	E	F	Weight
050	1/2"	10.20	7.5	3.7	4.3	7.6	0.75	3.75
075	3/4"	11.57	7.5	3.7	4.3	7.6	1.00	4.25
100	1"	15.20	10.3	3.9	4.7	8.2	1.25	6.50
150	1 1/2"	17.00	11.9	4.9	5.6	10.1	2.00	8.25
200	2"	17.00	11.9	4.9	5.6	10.1	2.50	13.75

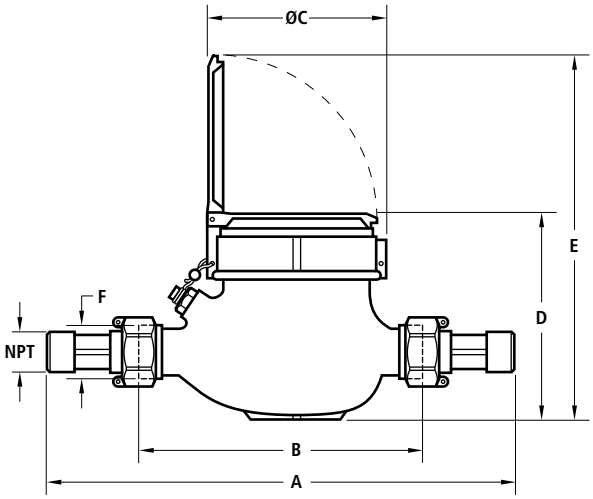

Accuracy Curves

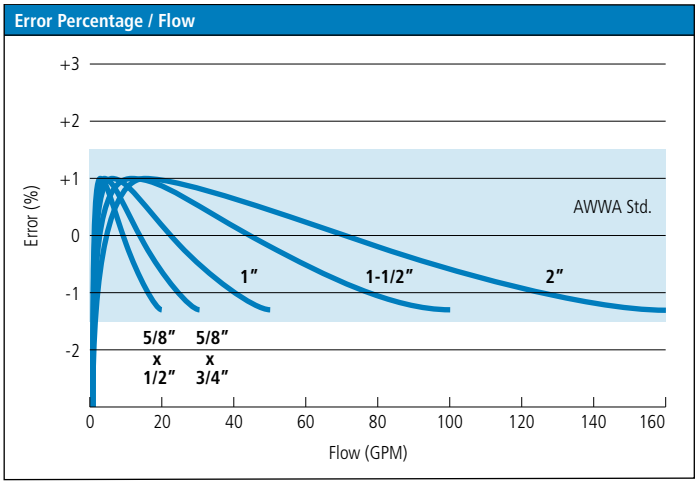

Head Loss Curves

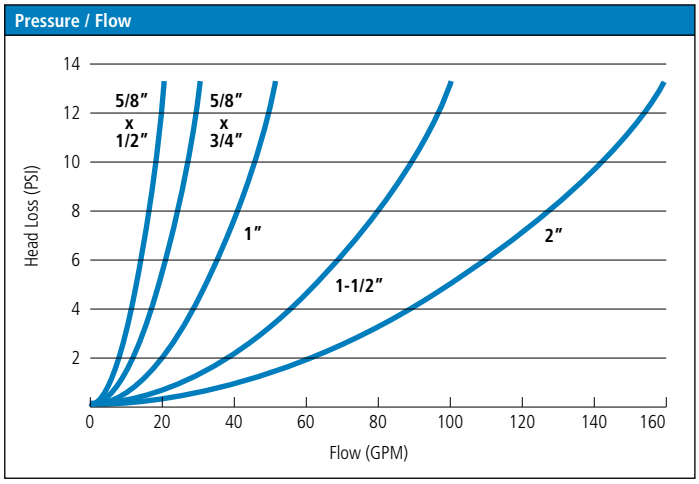

APPENDIX A.4

GRANULAR ACTIVATED CARBON SPECIFICATIONS

Coconut Shell-High Activated Carbon (CS-HAC) may be used for a variety of water treatment applications requiring the reduction of chlorine, tastes and odors.

Coconut Shell-High Activated Carbon (CS-HAC)

Clack granular activated carbon is designed for reduction of tastes, odors and dissolved organic chemicals from municipal and industrial water supplies. Manufactured from select grades of coconut shell coal to produce a high density, durable granular product capable of withstanding the abrasion and dynamics associated with repeated hydraulic transport, backwashing and mechanical handling. Activation is carefully controlled to produce exceptionally high internal surface area with optimum pore size for the adsorption of a broad range of low molecular weight organic contaminants and oxidizing agents like chlorine and ozone.

One of the most common applications for Clack Coconut Shell-High Activated Carbon (CS-HAC) is the reduction of the undesirable tastes and odors present in many chlorinated water supplies. CS-HAC has been successful for many years in the reduction of free chlorine from water supplies. The end product is clean, fresh water with no objectionable taste or odor characteristics.

To obtain maximum efficiency of the activated carbon in the adsorption process, it is desirable to have the greatest possible surface area in the smallest practical volume. This is necessary because the rate of adsorption is proportional to the amount of surface area of the adsorbing media. CS-HAC has a surface area of 1,050 square meters per gram. This results in high efficiency and greater system economy. Clack has for many years provided activated carbon to the OEM and replacement market as a pre-treatment for other water purification systems as well as for use in individual treatment equipment for the removal of specific impurities.

CS-HAC requires periodic backwashing to eliminate accumulated suspended matter and to re-grade the filter bed. CS-HAC has an extremely high capacity but must be replaced when the filter bed loses the capacity for reduction of taste and odor. CS-HAC may be used in either domestic or industrial applications using gravity flow or pressurized filter vessels.

ADVANTAGES

- CS-HAC is an outstanding material for applications requiring taste, odor and dissolved organic chemical removal from water with suspended matter present. This product can be used for filtering waters having a wide range of pH levels.
- Large surface area results in an exceptionally high capacity and efficiency.
- Balanced pore structure gives a more efficient adsorption range.
- CS-HAC is very durable so losses due to attrition are kept to a minimum.
- CS-HAC has a very high carbon-low ash content.
- Service rates of 5 gpm/sq. ft. are practical for ordinary taste, odor and chlorine loads.
- CS-HAC will impart a high “polish” to the filtered water.

PHYSICAL PROPERTIES

- Color: Black
- Mesh Size: 12 x 40
- Bulk Density: 28 lbs./cu. ft.
- Effective Size: 0.55-0.75 mm
- Ash Content: 2.5%
- Iodine Number: 1,000 mg/g
- Moisture as packed: 3%
- pH 10

CERTIFICATIONS AND APPROVALS

- NSF/ANSI Standard 61

CONDITIONS FOR OPERATION

- Water to be filtered should preferably be free of oil and suspended matter
- The water to be filtered should be relatively free of iron and turbidity for maximum service life
- Water pH range: wide range
- Bed depth: 26-30 in.
- Freeboard: 50% of bed depth (min.)
- Service flow rate: 5 gpm/sq. ft.
- Backwash flow rate: 10-12 gpm/sq. ft.
- Backwash bed expansion: 30-40% of bed depth
- Upon installation, backwash to remove carbon fines before placing unit into service

Service Flow Pressure Drop

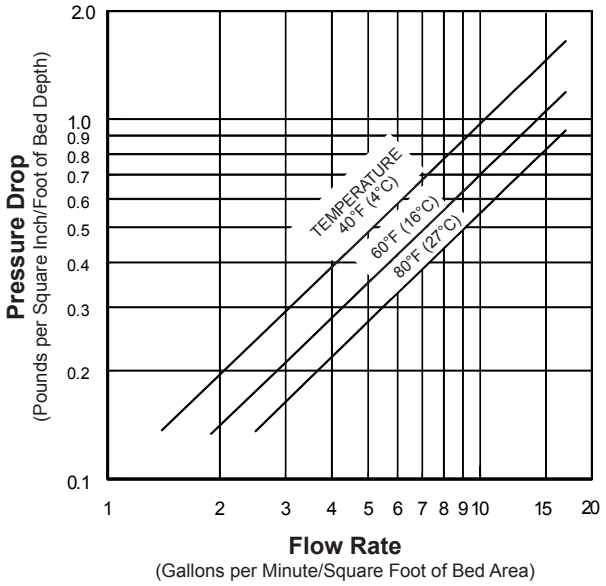

Backwash Bed Expansion

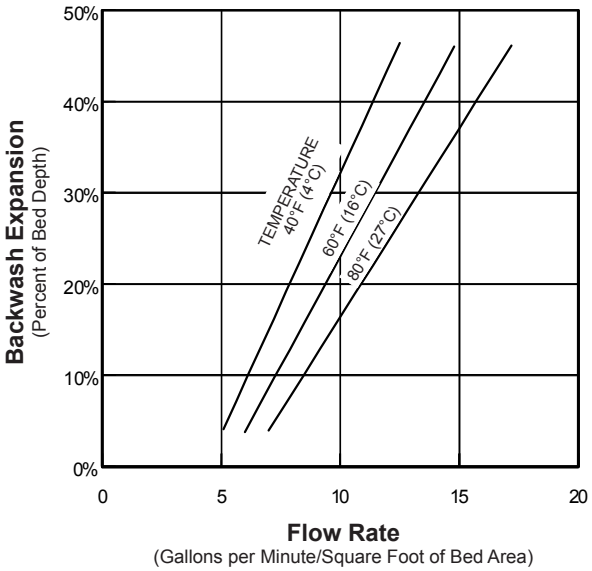

Dechlorination of Water (pH 7, 21°C)

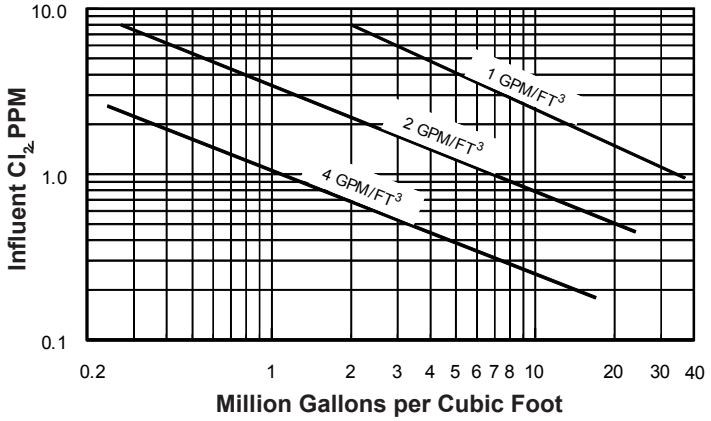

Certified to NSF/ANSI Standard 61

Coconut Shell-High Activated Carbon (CS-HAC) is manufactured by Jacobi Carbons, Inc.

ORDER INFORMATION

Part No.	Description	Cu. Ft./Bag	Wt./Cu. Ft.*	Bags/Pallet	Weight/Pallet	Pallet Dimensions
A8009-14	CS-HAC 12 x 40 mesh	1	28 lbs.	40	1170 lbs.	39″ x 45″ x 44″

*Weight per cubic foot is approximate.

CS-HAC manufactured by Jacobi Carbons Inc. is made in Sri Lanka.

NOT FOR INSTALLATION IN CALIFORNIA

The information and recommendations in this publication are based on data we believe to be reliable. They are offered in good faith, but do not imply any warranty or performance guarantee, as conditions and methods of use of our products are beyond our control. As such, Clack makes no express or implied warranties of any kind with respect to this product, including but not limited to any implied warranty of merchantability or fitness for a particular purpose. We recommend that the user determine whether the products and the information given are appropriate, and the suitability and performance of our products are appropriate, by testing with its own equipment. Specifications are subject to change without notice.

The information and recommendations given in this publication should not be understood as recommending the use of our products in violation of any patent or as a license to use any patents of the Clack Corporation.

The filter medias listed in this brochure do not remove or kill bacteria. Do not use with water that is microbiologically unsafe or of unknown quality without adequate disinfection before or after the system.

Clack will not be liable under any circumstance for consequential or incidental damages, including but not limited to, lost profits resulting from the use of our products.

Clack®
www.clackcorp.com

Clack Corporation
4462 DURAFORM LANE • WINDSOR, WISCONSIN 53598-9716 USA
PHONE (608) 846-3010 FAX (608) 846-2586 SALES/CUSTOMER SERVICE FAX (800) 755-3010

Form No. 2820 • 10/4/2016

Clack Anthracite is a select coal, mined and processed for use in water filtration. It is ideal for single bed, dual bed or multi-media filtration systems.

Anthracite

ADVANTAGES

- Higher service flows and longer filter runs than equivalent sand filters
- Close attention to gradation, hardness and purity assures consistent and reliable performance
- Unique density allows Clack Anthracite to be combined with other filtration media in multi-media filters
- Lower uniformity coefficient has less oversized and undersized particles resulting in a highly uniform bed

PHYSICAL PROPERTIES

- Color: Black
- Bulk Density: 50 lbs./cu. ft.
- Hardness: 3.0-3.8 (Mohs scale)
- Effective Size:
  #1 Anthracite: 0.6-0.8 mm
  #1½ Anthracite: 0.85-0.95 mm
  #2 Anthracite: 1.7-2.0 mm
- Uniformity Coefficient:
  #1 Anthracite: <1.7
  #1½ Anthracite: <1.7
  #2 Anthracite: <1.6
- Mesh Size:
  #1 Anthracite: 14x30
  #1½ Anthracite: 10x20
  #2 Anthracite: 4x12
- Acid Solubility: ≤1%
- Caustic Solubility: <1%
- Apparent Specific Gravity: 1.6 gm/cc
- Meets AWWA Standard B100-01

CONDITIONS FOR OPERATION

- Bed depth: 24-36 in., 10-18 in multi-bed filters
- Freeboard: 50% of bed depth (min.)
- Service flow rate: 5 gpm/sq. ft. or higher depending upon local conditions
- Backwash flow rate:
  #1 Anthracite: 12-18 gpm/sq. ft.
  #1½ Anthracite: 18-25 gpm/sq. ft.
  #2 Anthracite: use air scour
- Backwash bed expansion: 20-40% of bed depth

Although its potential for water treatment has been recognized since ancient times, anthracite coal was not used for this purpose until the beginning of the 20th century. Crushed Anthracite makes an excellent medium density filtration media. Clack Anthracite is mined from the finest Pennsylvania coal. It is specifically selected for water treatment, and during its production goes through several sizing inspections. Representative samples are randomly chosen for a complete laboratory quality control analysis for effective size, uniformity coefficient, specific gravity, acid solubility and hardness.

Because of its angular shape, some of the sediment penetrates deeper into the bed. When compared to equivalent filter sands, this means longer filter runs and less head loss. Backwash rates are also reduced.

Because of its unique density, Clack Anthracite can be used in multi-media filters. At 50 lbs/ft^3, it will hydraulically classify and remain above heavier media such as Filter Sand or Manganese Greensand, providing a prefiltration layer.

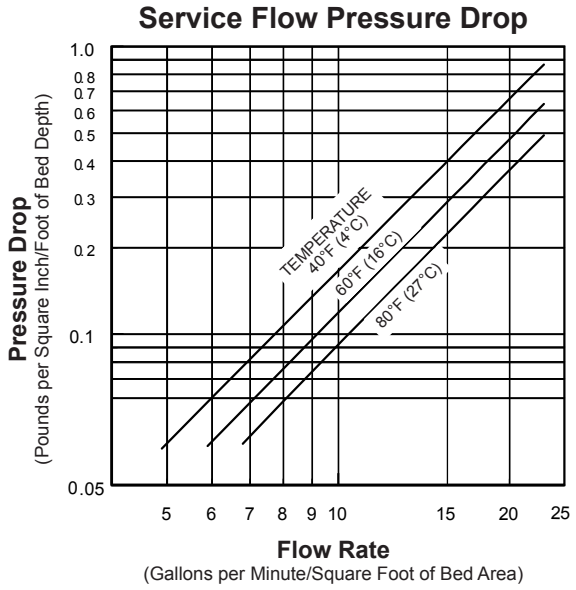

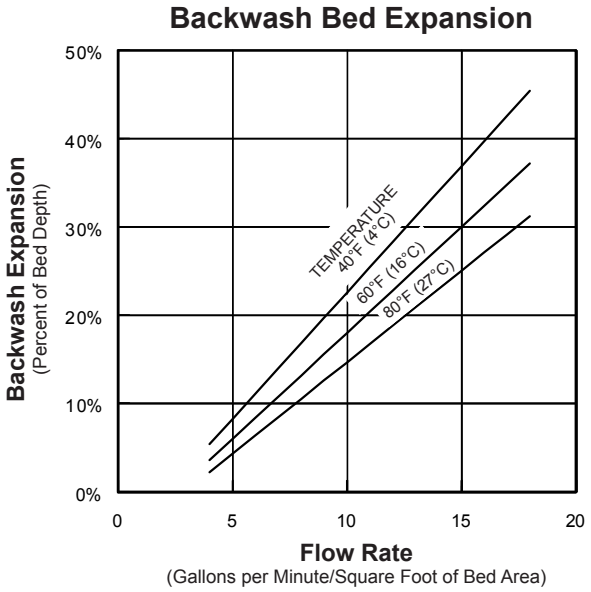

Certified to NSF/ANSI/CAN Standard 61

Anthracite Filter Media
is manufactured by
Xylem Water Solutions Zelienople LLC

ORDER INFORMATION

Part No.	Description	Cu. Ft./Bag	Wt./Cu. Ft.*	Bags/Pallet	Weight/Pallet	Pallet Dimensions
A8029	Anthracite #1 (0.6-0.8 mm)	1	50 lbs.	50	2550 lbs.	40″ x 48″ x 56″
A8030	Anthracite #1½ (0.85-0.95 mm)	1	50 lbs.	50	2550 lbs.	40″ x 48″ x 56″
A8031	Anthracite #2 (1.7-2.0 mm)	1	50 lbs.	50	2550 lbs.	40″ x 48″ x 56″

*Weight per cubic foot is approximate.

Clack®
www.clackcorp.com

Clack Corporation
4462 DURAFORM LANE • WINDSOR, WISCONSIN 53598-9716 USA
PHONE (608) 846-3010 FAX (608) 846-2586 SALES/CUSTOMER SERVICE FAX (800) 755-3010

Form No. 2354 • 9/16/2019

Jacobi | THE CARBON COMPANY PICA | A JACOBI CARBONS COMPANY

TECHNCIAL BULLETIN

Activated Carbon

ADSORPTION OF TRI- AND TETRACHLOROETHYLENE

Trichloroethylene (TCE) and Tetrachloroethylene (PCE) are two of the most common solvents that contaminate groundwater supplies in the United States. Both solvents see frequent use in the extraction of fat, in the textile industry, in the production of various pharmaceutical and chemical products. TCE is also used as a degreaser from fabricated metal parts, and PCE serves as a component of aerosol dry-cleaning solvents.

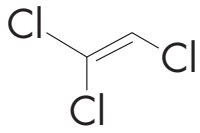

Trichloroethylene

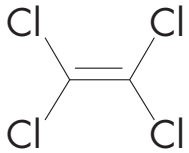

Tetrachloroethylene

Due to their widespread use, both TCE and PCE are often found in groundwater supplies. Due to their health and environmental impacts, USEPA has set a drinking water maximum contaminant level (MCL) of 5 parts per billion for each solvent.

Granular activated carbon (GAC) serves as a common method to remove TCE and PCE contamination from groundwater. In fact, USEPA specifically cites GAC treatment as an effective means of obtaining the 5 ppb MCL. Two common grades of GAC that are often used for water treatment are coconut shell-based and bituminous coal-based materials.

For groundwater sources for the removal of TCE and PCE, coconut shell-based carbons often exhibit superior adsorptive capacities as compared to coal-based alternatives. To demonstrate this comparison, two granular activated carbons, AquaSorb™ 1500 (coal-based) and AquaSorb™ CX (coconut shell-based) were tested regarding their adsorption capacity for trichlorethylene and tetrachlorethylene removal.

The tests were conducted by Jacobi's Customer Support Laboratory located in Vierzon (France). Adsorption isotherms were carried out at room temperature for 2 hours (semi-equilibrium). The water used, provided by a client (located in the north of France) had a concentration of 4.5 µg/l of tri-and tetrachlorethylene (respectively 1.3 µg/l and 3.2 µg/l). The doses of activated carbon chosen for the tests were 1,5 and 10 mg/l.

Experimental results

The tests gave the following results:

AQUASORB™ CX

	TRICHLOROETHYLENE			TETRACHLOROETHYLENE		
Concentration of Activated Carbon (mg/l)	Residual Concentration (µg/l)	Removal (%)	Adsorption Capacity (µg/mg)	Residual Concentration (µg/l)	Removal (%)	Adsorption Capacity (µg/mg)
0	1.3			3.2		
1	0.9	31	0,4	2.2	31	1
5	<0.5	>62	>0.16	0.8	75	0.48
10	<0.5	>62	>0.08	<0,5	>84	>0.27

AQUASORB™ 1500

	TRICHLOROETHYLENE			TETRACHLOROETHYLENE		
Concentration of Activated Carbon (mg/l)	Residual Concentration (µg/l)	Removal (%)	Adsorption Capacity (µg/mg)	Residual Concentration (µg/l)	Removal (%)	Adsorption Capacity (µg/mg)
0	1.3			3.2		
1	1	23	0.3	2.4	25	0.8
5	0.6	54	0.14	0.8	75	048
10	<0.5	>62	>0.08	<0.5	>84	>0.27

In the case of each of the targeted compounds, the higher adsorption rates (at the lowest doses of activated carbon) are obtained with AquaSorb™ CX. With this activated carbon, for example, at a dose of 1 mg/l, the removal efficiency of trichlorethylene and tetrachlorethylene is 31% versus 23% and 25% respectively with the same dose of AquaSorb™ 1500. The adsorption capacities are also higher with AquaSorb™ CX. This is confirmed by the isotherms presented below.

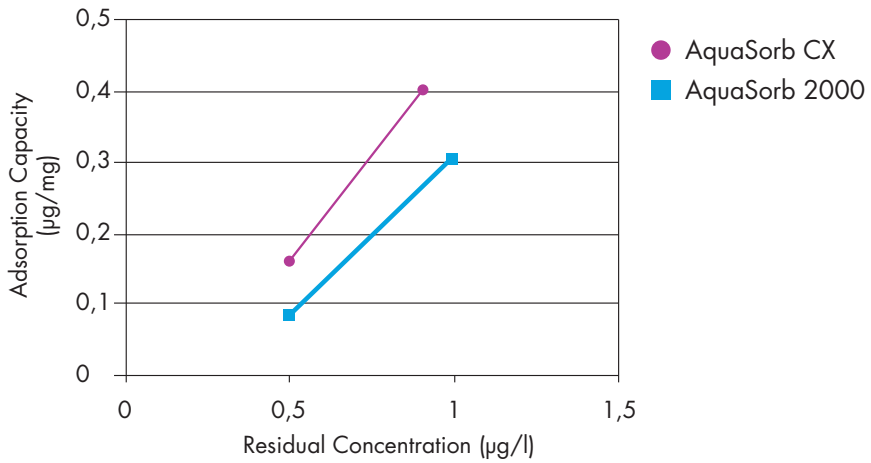

Adsorption of Trichloroethylene

The initial concentration of trichlorethylene in water is 1.3 µg/l. The experimental results given above are useful for plotting adsorption isotherms comparing the efficiency of each activated carbon tested for the removal of trichlorethylene. The results indicate firstly that trichloroethylene is adsorbable on activated carbon. According to the isotherm of Trichloroethylene, AquaSorb™ CX has a better removal efficiency compared to AquaSorb™ 1500.

Adsorption of Tetrachloroethylene

The initial concentration of Tetrachloroethylene in water is 3.2 µg / l. The results presented above allow to draw the isotherm shown below, which compares the adsorption efficiency of each activated carbon tested regarding tetrachlorethylene removal. AquaSorb™ CX is more effective than AquaSorb™ 1500 for Tetrachloroethylene removal. This observation is valid for a range of residual concentrations greater than 1µg / l.

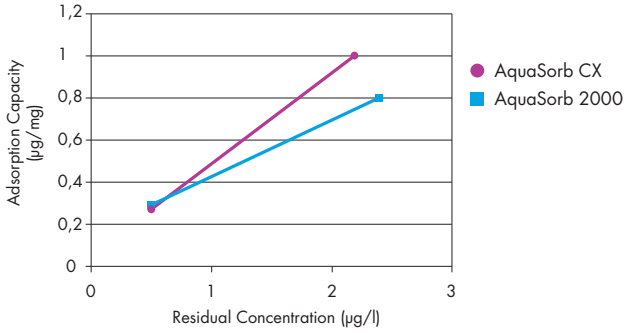

Adsorption comparison of the two compounds

For AquaSorb™ CX (which is the most effective carbon for the removal of both pollutants), the adsorption of the two compounds can be compared relative to each other. This determines which compound adsorbs best on activated carbon:

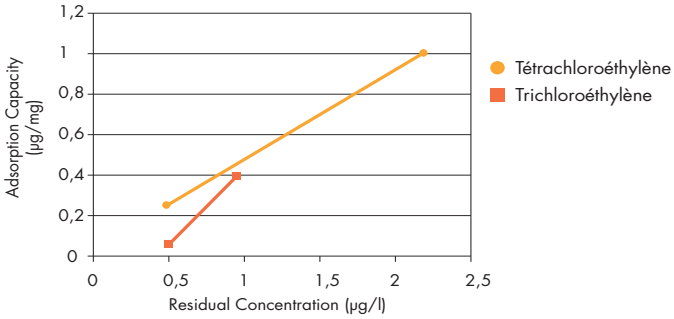

By comparison between the two compounds, Tetrachloroethylene adsorbs better than Trichloroethylene (on AquaSorb™ CX activated carbon), in the range of residual concentrations from 0.5 to 1µg / l.

Conclusion

Trichlorethylene and tetrachlorethylene are two compounds that are adsorbed on activated carbon. AquaSorb™ CX is more effective for the removal of these pollutants compared to AquaSorb™ 1500. This observation can be explained by the fact that the AquaSorb™ CX presents the most suitable porosity (micropores) for their elimination.

For more information or to contact Jacobi visit: www.jacobi.net

JACOBI-TIS-AQUASORB-TCE+PCE-ADSORPTION-US-A4-ENG-A1113

Jacobi Corporate Headquarters
Slöjdaregatan 1
SE-39353 Kalmar | Sweden
Tel: +46 480 417550 | Fax: +46 480 417559
info@jacobi.net | www.jacobi.net

Jacobi
THE CARBON COMPANY

WESTATES® COCONUT SHELL BASED GRANULAR ACTIVATED CARBON — AQUACARB® 1230AWC AND 1240AWC CARBONS

FOR USE IN POTABLE WATER, AND PROCESS WATER APPLICATIONS

Description

AquaCarb® 1230AWC and 1240AWC carbons are high activity coconut shell based granular activated carbons. These hard, attrition resistant high surface area carbons are designed to remove difficult to adsorb organics from potable and process water. They are especially effective for adsorbing chlorine, disinfection by-products, TCE, PCE, MTBE and other trace level organics. These carbons are acid washed yielding a very low ash content, pH neutral carbon that is ideally suited for use in potable water and high purity water systems for the microelectronics and other industries.

Applications

Cost effective AquaCarb activated carbons developed by Evoqua have been demonstrated to provide superior performance in an extensive array of liquid phase treatment applications. AquaCarb activated carbons are available for:

- Removal of trace organic contaminants
- Pesticide removal
- MTBE removal
- Disinfection by-product (DBP) removal
- Drinking water treatment
- Industrial process water treatment
- High purity water applications
- Home water filtration systems
- Bottling applications (soft drinks, bottled water)

Quality Control

AquaCarb activated carbons are extensively quality checked at our State of California certified environmental and carbon testing laboratory located in Los Angeles, CA. Evoqua's laboratory is fully equipped to provide complete quality control analyses using ASTM standard test methods in order to assure the consistent quality of all Westates® carbons.

Our technical staff offers hands-on guidance in selecting the most appropriate system, operating conditions and carbon to meet your needs. For more information, contact your nearest Evoqua representative.

Features and Benefits

- ANSI/NSF Standard 61 classified for use in potable water applications
- Fully conforms to physical, performance and leachability requirements established by the current ANSI/AWWA B604 (which includes the Food Chemical Codex requirements)
- A detailed quality assurance program guarantees consistent quality from lot to lot and shipment to shipment

TYPICAL PROPERTIES

PARAMETER	AQUACARB® 1230AWC	AQUACARB® 1240AWC
Carbon Type	Coconut Shell	Coconut Shell
Mesh Size, U.S. Sieve	12 x 30	12 x 40
Effective Size, mm	0.6–0.85	0.55–0.75
Uniformity Coefficient	2.0	1.9
Iodine No., mg I_2/g	1100	1100
Hardness No., Wt. %	95	95
Abrasion No., Wt. %	85	85
Apparent Density, g/cc	0.45–0.52	0.45–0.52
Water Soluble Ash, Wt. %	0.2	0.2
Contact pH	6.5–8	6.5–8

Safety Note: Under certain conditions, some compounds may oxidize, decompose or polymerize in the presence of activated carbon causing a carbon bed temperature rise that is sufficient to cause ignition. Particular care must be exercised when compounds that have a peroxide-forming tendency are being adsorbed. In addition the adsorption of VOCs will lead to the generation of heat within a carbon bed. These heats of reaction and adsorption need to be properly dissipated in order to fully assure the safe operation of the bed.

Wet activated carbon readily adsorbs atmospheric oxygen. Dangerously low oxygen levels may exist in closed vessels or poorly ventilated storage areas. Workers should follow all applicable state and federal safety guidelines for entering oxygen depleted areas.

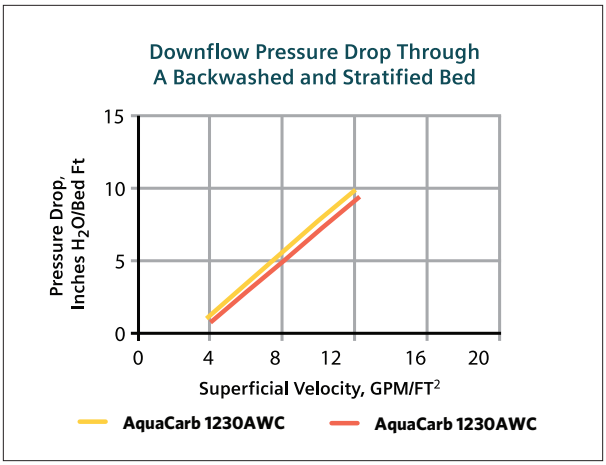

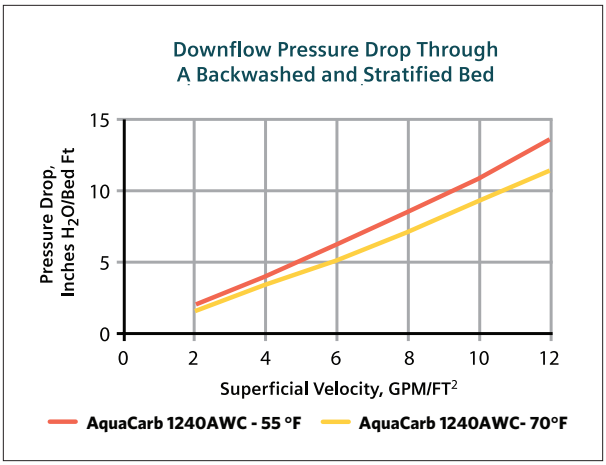

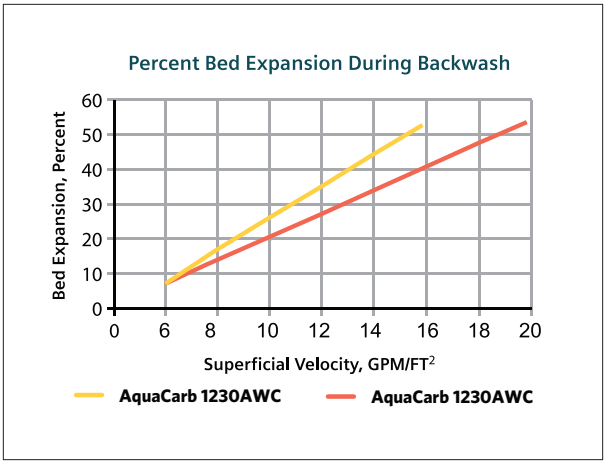

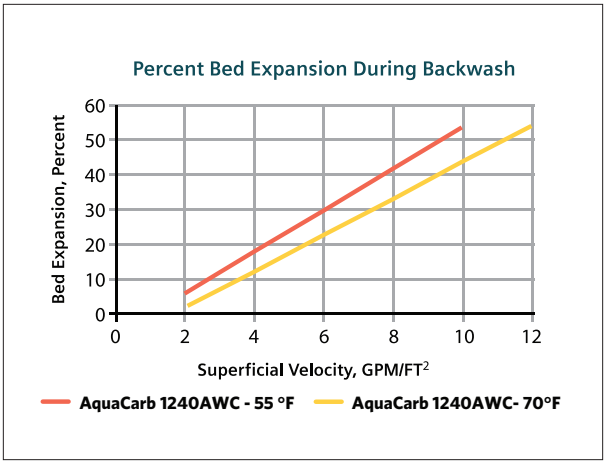

EVOQUA WATER TECHNOLOGIES

181 Thorn Hill Road, Warrendale, PA 15086

+1 (866) 926-8420 (toll-free) **+1 (978) 614-7233** (toll) **www.evoqua.com**

APPENDIX A.5

CLACK VALVE SPECIFICATIONS AND MANUAL

WS1 TC

WATER SPECIALIST 1" TC CONTROL VALVE

shown with optional bypass

- Backwash and brining ability to 22" diameter tanks
- Solid state microprocessor with easy access front panel settings
- Double backwash feature offers efficiency, optimum regeneration and cleaning ability
- Days between regeneration feature: 1–99 days standard; 7-day optional
- Downflow regeneration
- 10 selectable pre-programmed regeneration cycles
- Stores system configuration and operation data in nonvolatile memory
- 12-volt output AC Adapter provides safe and easy installation
- Control valve design provides optimum service and backwash rates
- Treated water regenerant refill
- Reliable and proven DC drive

Water Specialist 1” TC Control Specifications

Inlet/Outlet Fittings	¾" to 1.25” NPS
Cycles	up to 6
Valve Material	Noryl (1) or equivalent
Regeneration	downflow

FLOW RATES

Service @15 psi drop (includes bypass)	27 gpm
Backwash @ 25 psi drop (includes bypass)	27 gpm
Cv Service	7.0
Cv Backwash	5.4

OPERATING PRESSURES

Minimum/Maximum	20 psi – 125 psi

OPERATING TEMPERATURES

Minimum/Maximum	40° – 110° F

DIMENSIONS & WEIGHT

Distributor Pilot	1.050” OD Pipe (¾" NPS)
Drain Line	¾” or 1” NPT
Brine Line	3/8” or ½” OD Poly Tube
Mounting Base	2 ½” - 8 NPSM
Height From Top Of Tank	7 3/8”
Weight	4.5 lbs.

ELECTRICAL SPECIFICATIONS

	AC Adapter	
	U.S.	International
Supply Voltage	120V AC	230V AC
Supply Frequency	60 Hz	50 Hz
Output Voltage	12V AC	12V AC
Output Current	500 mA	500 mA

TANK APPLICATIONS

Water Softener	6” – 22” diameter
Water Filter (2)	6” – 22” diameter

CYCLES OF OPERATION (Softener Downflow)

Cycle	Range of times minutes
1. Backwash 1st(upflow)	3 - 12
2. Regenerate Draw/Slow Rinse (downflow)	50 - 70
3. Backwash 2nd (upflow)	3 - 12
4. Fast Rinse (downflow)	3 - 8
5. Regenerant Refill (in service with treated water)	As Programmed
6. Service (downflow)	

Options: Backwash Filter, Bypass, Weather Cover

Compatible with the following typical concentration of regenerants or chemicals: Sodium chloride, potassium chloride, potassium permanganate, sodium bisulfite, chlorine and chloramines

1. Noryl is a trademark of General Electric
2. Filter tank size calculated @ 10 gpm of backwash per square foot of bed area

Distributed by: Aqua Purification Systems, Inc. - USA - Fax: 408-225-7974
E-mail: sales@aquapurification.com - www.aquapurification.com - www.birmfilter.com

Clack®

WS1.5EE

WATER SPECIALIST CONTROL VALVE

NSF

Certified to NSF/ANSI 61 and 372.

Optional 1.5" Meter

- 1.5" top mount control valve suited for mid-size commercial/industrial applications
- Epoxy coated lead free brass valve body*
- Economical stainless steel optional meter assembly
- Service flow rate of 70 gpm, backwash 52 gpm
- Solid state microprocessor with easy access front panel settings
- Front panel display for time of day, days until next regeneration, volume remaining, current flow rate and total volume used (Totalizer)
- Four methods to initiate regeneration; meter immediate, meter delayed, time clock delayed or pressure differential
- Optional double backwash feature offers optimum regeneration, cleaning ability and efficiency
- Fully adjustable cycle times with 6-cycle control delivers controlled backwash, downflow brining or upflow brining, slow rinse, second backwash, fast rinse, refill and downflow service
- Coin Cell Lithium battery back-up with a 8 hour carry over
- 12-volt output AC Adapter provides safe and easy installation
- Post treated water regenerant refill
- Patented one piece expanding seal spacer stack assembly U.S. Patent 6,402,944
- Patented linearly reciprocating piston operation U.S. Patent 6,444,127
- Reliable and proven DC drive

Water Specialist 1.5” EE Control Specifications

Inlet/Outlet (1)	1.5” Female NPT
Cycles	Up to 6
Valve Material	Epoxy coated brass
Regeneration	Downflow

CONTROL VALVE FLOW RATES

Service @15 psi drop (includes meter)	70 gpm
Backwash @ 25 psi drop	52 gpm
Cv Service	18.1
Cv Backwash	10.4

OPERATING PRESSURES

Minimum/Maximum	20 psi – 125 psi

OPERATING TEMPERATURES

Minimum/Maximum	40° – 110° F

METER SPECIFICATIONS

Accuracy	± 5%
Flow Rate Range	0.5 – 75 GPM
Gallon Range	20 – 1,500,000 gallons
Totalizer	1 – 9,999,000 gallons

DIMENSIONS & WEIGHT

Distributor Pilot	
Valve bodies with 1.5" Female NPT Inlet & Outlet	1.90” OD (1.5" NPS)
Drain Line Connection (2)	1.25” Female NPT
Adapter Included	¾" Male NPT Elbow
Brine Line Connection	¾” Female NPT
Adapter Included	½” OD Poly Tube Compression
Mounting Base	4” - 8 UN
Height From Top Of Tank	7.5”
Shipping Weight With Meter	21 lbs.

ELECTRICAL SPECIFICATIONS

	AC Adapter	
	U.S.	International
Supply Voltage	120V AC	230V AC
Supply Frequency	60 Hz	50 Hz
Output Voltage	12V AC	12V AC
Output Current	500 mA	500 mA

TANK APPLICATIONS

Water Softener	12” – 30” diameter (4)
Water Filter (3)	12” – 30” diameter

CYCLES OF OPERATION

	Softener	Filter
Cycle	Range of time in minutes	
1. Backwash 1st (upflow)	1-95	Backwash 1-95
2. Regenerate Draw/Slow Rinse (downflow)	1-180	
3. Backwash 2nd (upflow)	1-95	
4. Fast Rinse (downflow)	1-95	Rinse 1-95
5. Regenerant Refill (in service with treated water)	0.1-99.0 or off	
6. Service (downflow)		

Options: Backwash Filter, Weather Cover

Compatible with the following typical concentrations of regenerants or chemicals: Sodium chloride, potassium chloride, potassium permanganate, sodium bisulfite, chlorine and chloramines

1. See Distributor Pilot.
2. Casting comes with a 1.25" Female NPT drain connection. An adapter is provided to accept existing WS1 drain line ¾" Male NPT flow controls up to 10 gpm. Other drain line flow controls are available for flow rates above 10 gpm.
3. Filter tank size calculated @ 10 gpm of backwash per square foot of bed area
4. Requires a V3158-02 installed for a brine elbow on the control valve, use of a 454 controlled flow brine valve assembly H7070-36CF-5 or H7070-54CF-5 (designed with 5 gpm BLFC), 1” air check, or 494 brine valve assembly, and minimum ¾” hard pipe PVC brine line.

WS1TC Series
Installation and Operation Manual

Table of Contents

Installation 3
Bypass Valve 4
Start-up Instructions 6
General Information 7
User Displays/Settings 8
Installer Displays/Settings 9
OEM System Setup 11
Drawings and Part Numbers 13
Front Cover and Drive Assembly 14
Drive Cap Assembly, Downflow Piston, Regenerant Piston and Spacer Stack Assembly 15
Injector Cap, Injector Screen, Injector, Plug and O-ring 16
Refill and Refill Port Plug 17
Drain Line – 3/4” 18
Drain Line – 1” 19
Meter Plug 20
Installation Fitting Assemblies 21
Bypass Valve 22
WS1 Wrench (Order No. V3193) 23
Service Instructions 24
Troubleshooting 28

Installation

Top view

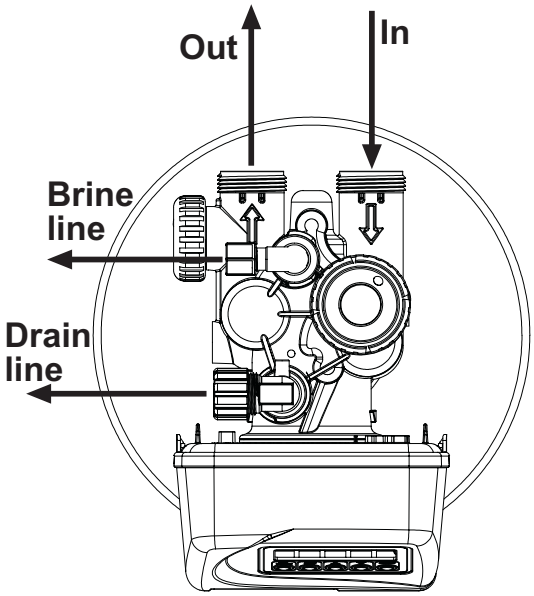

Basic installation

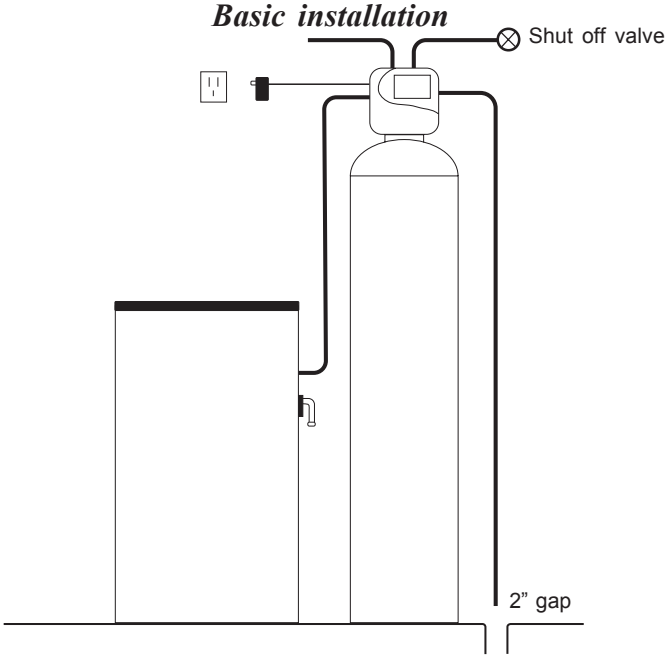

GENERAL INSTALLATION & SERVICE WARNINGS
The control valve, fittings and/or bypass are designed to accommodate minor plumbing misalignments but are not designed to support the weight of a system or the plumbing.

Do not use Vaseline, oils, other hydrocarbon lubricants or spray silicone anywhere. A silicon lubricant may be used on black o-rings but is not necessary. **Avoid any type of lubricants, including silicone, on red or clear lip seals.**

Do not use pipe dope or other sealants on threads. Teflon tape must be used on the threads of the 1" NPT elbow or the ¼” NPT connection and on the threads for the drain line connection. Teflon tape is not necessary on the nut connections or caps because o-ring seals are used. The nuts and caps are designed to be unscrewed or tightened by hand or with the special plastic Service Wrench, #V3193. If necessary a pliers can be used to unscrew the nut or cap. **Do not use a pipe wrench** to tighten or loosen nuts or caps. **Do not place screwdriver in slots on caps and/or tap with a hammer.**

SITE REQUIREMENTS:
- Water pressure, 20-125 psi
- Water temperature
- The tanks should be on a firm, level surface
- Electrical: Use a 115/120v, 60Hz uninterrupted outlet
- Current draw is 0.25 amperes
- A 15-foot power cord is furnished
- The plug-in transformer is for dry locations only
- Batteries are not used

1. The distance between the drain and the water conditioner should be as short as possible. All plumbing should be done in accordance with local plumbing codes.

2. Since salt must be periodically added to the brine tank, it should be located where it is easily accessible.

3. Do not install any water conditioner with less than 10 feet of piping between its outlet and the inlet of a water heater.

4. Do not locate unit where it or its connections (including the drain and overflow lines) will ever be subjected to room temperatures under 34° F.

5. The use of resin cleaners in an unvented enclosure is not recommended.

6. INLET/OUTLET PLUMBING: Connect to a supply line downstream of outdoor spigots. Install an inlet shutoff valve and plumb to the unit’s bypass valve inlet located at the right rear as you face the unit. There are a variety of installation fittings available. They are listed under **Installation Fitting Assemblies.** When assembling the installation fitting package (inlet and outlet), connect the fitting to the plumbing system first and then attach the nut, split ring and o-ring. Heat from soldering or solvent cements may damage the nut, split ring or o-ring. Solder joints should be cool and solvent cements should be set before installing the nut, split ring and o-ring. Avoid getting solder flux, primer, and solvent cement on any part of the o-rings, split rings, bypass valve or control

valve. If the building's electrical system is grounded to the plumbing, install a copper grounding strap from the inlet to the outlet pipe. **Plumbing must be done in accordance with all applicable local codes.**

7. DRAIN LINE: First, be sure that the drain can handle the backwash rate of the system. Solder joints near the drain must be done prior to connecting the drain line flow control fitting. Leave at least 6" between the drain line flow control fitting and solder joints. Failure to do this could cause interior damage to the flow control. Install a ½" I.D. flexible plastic tube to the Drain Line Assembly or discard the tubing nut and use the ¾" NPT fitting for rigid pipe. If the backwash rate is greater than 7 gpm, use a ¾" drain line. Where the drain line is elevated but empties into a drain below the level of the control valve, form a 7" loop at the discharge end of the line so that the bottom of the loop is level with the drain connection on the control valve. This will provide an adequate anti-siphon trap. Where the drain empties into an overhead sewer line, a sink-type trap must be used. Run drain tube to its discharge point in accordance with plumbing codes. Pay special attention to codes for air gaps and anti-siphon devices.

8. BRINE TANK CONNECTION: Install a **3/8"** O.D. polyethylene tube from the Refill Elbow to the Brine Valve in the brine tank.

9. OVERFLOW LINE CONNECTION:
AN OVERFLOW DRAIN LINE IS RECOMMENDED WHERE A BRINE OVERFLOW COULD DAMAGE FURNISHINGS OR THE BUILDING STRUCTURE.
Your softener may be equipped with a brine tank safety float which greatly reduces the chance of an accidental brine overflow. In the event of a malfunction, however, an OVERFLOW LINE CONNECTION will direct the "overflow" to the drain instead of spilling on the floor where it could cause considerable damage. This fitting should be on the side of the cabinet or the brine tank.
To connect overflow fitting, locate hole in side of brine tank. Insert overflow fitting into tank and tighten with plastic thumb nut and gasket from the inside. Attach a length of ½" I.D. tubing (not supplied) to fitting and run to drain. Do not elevate overflow line higher than 3" below bottom of overflow fitting. Do not "tie" this tube into the drain line of the control valve. Overflow line must be a direct, separate line from overflow fitting to drain, sewer, or tub. Allow an air gap as per the drain line instructions.

IMPORTANT: Never insert a drain line directly into a drain, sewer line, or trap. Always allow an air gap between the drain line and the wastewater to prevent the possibility of sewage being back-siphoned into the conditioner.

10. SERIAL NUMBER: Record the serial number on the installer's and customer's records.

Bypass Valve

The bypass valve is typically used to isolate the control valve from the plumbing system's water pressure in order to perform control valve repairs or maintenance. The WS1 bypass valve is particularly unique in the water treatment industry due to its versatility and state of the art design features. The 1" full flow bypass valve incorporates four positions including a diagnostic position that allows service personal to work on a pressurized system while still providing untreated bypass water to the facility or residence. Its completely non-metallic, all plastic design allows for easy access and serviceability without the need for tools.

The bypass body and rotors are glass filled Noryl and the nuts and caps are glass filled polypropylene. All seals are self-lubricating EPDM to help prevent valve seizing after long periods of non-use. Internal o-rings can easily be replaced if service is required.

The bypass consists of two interchangeable plug valves that are operated independently by red arrow shaped handles. The handles identify the flow direction of the water. The plug valves enable the bypass valve to operate in four positions.

1. **Normal Operation Position:** The inlet and outlet handles point in the direction of flow indicated by the engraved arrows on the control valve. Water flows through the control valve during normal operation and this position also allows the control valve to isolate the media bed during the regeneration cycle. (See Figure 1)
2. **Bypass Position:** The inlet and outlet handles point to the center of the bypass, the control valve is isolated from the water pressure contained in the plumbing system. Untreated water is supplied to the plumbing system. (See Figure 2)
3. **Diagnostic Position:** The inlet handle points in the direction of flow and the outlet handle points to the center of bypass valve, system water pressure is allowed to the control valve and the plumbing system while not allowing water to exit from the control valve to the plumbing. (See Figure 3)
4. **Shut Off Position:** The inlet handle points to the center of the bypass valve and the outlet handle points in the direction of flow, the water is shut off to the plumbing system . If water is available on the outlet side of the softener it is an indication of water bypass around the system (i.e. a plumbing connection somewhere in the building bypasses the system). (See Figure 4)

BYPASS VALVE OPERATION

Figure 1

NORMAL OPERATION

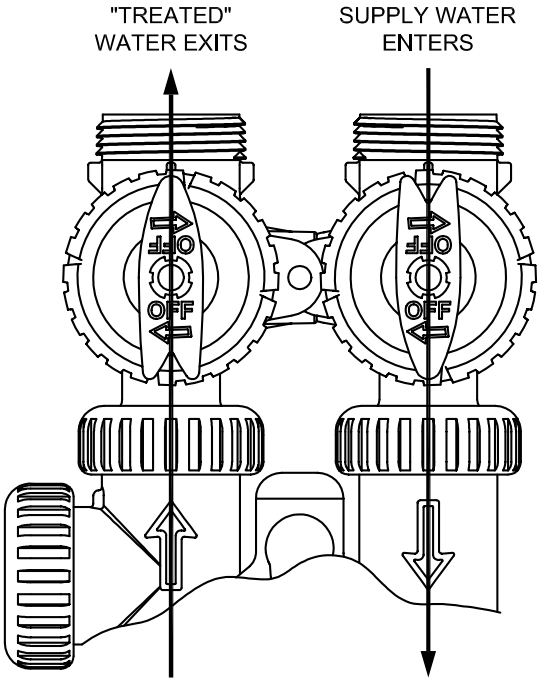

Figure 2

BYPASS OPERATION

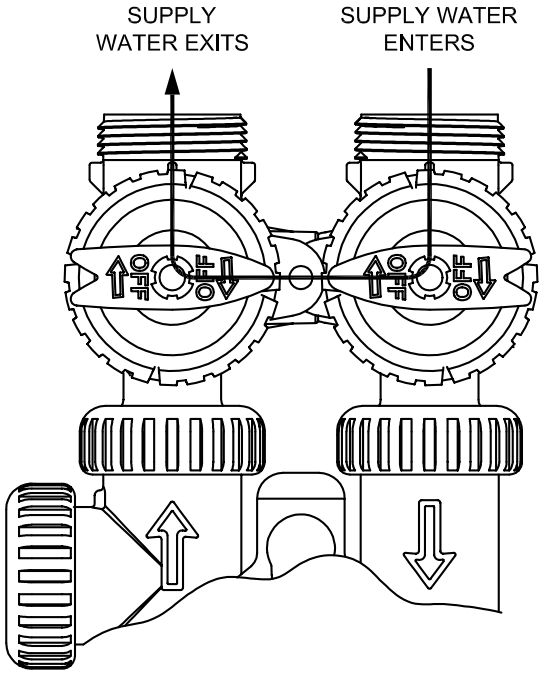

Figure 3

DIAGNOSTIC MODE

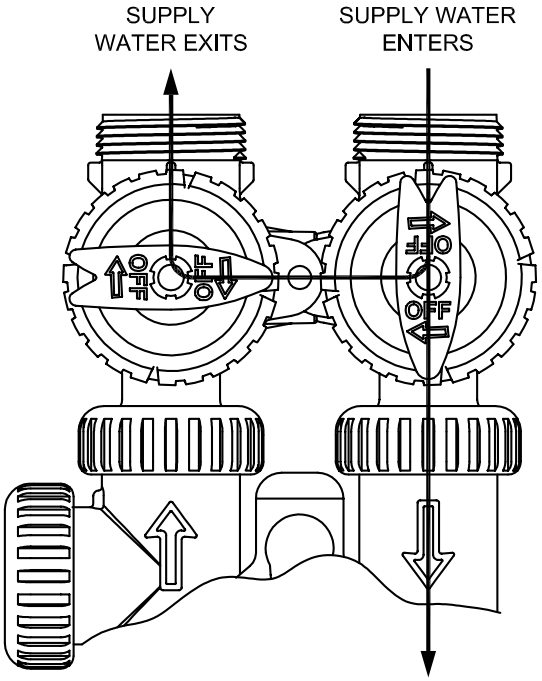

Figure 4

SHUT OFF MODE

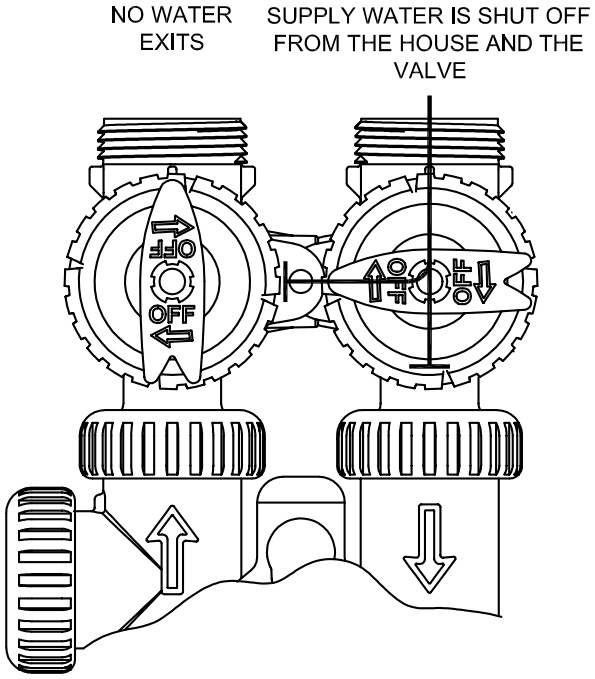

Start-up Instructions

• After installation is completed and checked for leaks, rotate the bypass handles to the bypass position (see bypass valve diagram page).

• Fully open a cold water faucet.

• Allow water to run until clear to rid pipes of debris, which may have occurred during installation.

• The system is now ready for testing:

1. With the bypass valve in the bypass position, manually pour enough water into the brine tank to reach the top of the air check valve.

2. Press and hold the UP and DOWN buttons simultaneously for three seconds until the drive motor starts. Wait until the motor stops and the display reads "C1."

3. Open the inlet handle of the bypass valve very slightly allowing water to fill the tank slowly in order to expel air. CAUTION: If water flows too rapidly, there will be a loss of media out of the drain.

4. When the water is flowing steadily to the drain without the presence of air, press the UP button to advance the control to the brine position C2.

5. Fully open the inlet bypass valve handle (bypass is now in the diagnostic position)
   Check to verify that water is being drawn from the brine tank
   There should be a slow flow to the drain
   Allow three minutes for the media bed to settle

6. Press the UP button again to advance the control to the next position and allow water to run to drain for 2-3 minutes. Control will transfer and the display will read C3 or C4 depending on the program used. If C3 is displayed press the UP button to advance the control to the rinse position C4. Allow water to run to drain until clear.

7. Press the UP button to advance the control to where the display reads C5. This will allow water to run into the brine tank and prepare it for the next regeneration. Allow the brine tank to fill automatically.

8. While the brine tank is filling, load it with water softener salt.

9. SANITIZE! For each cubic foot of resin, add two ounces of 51/4% household chlorine bleach to the water in the brine tank brine well. Press and hold the UP and DOWN buttons simultaneously for three seconds to begin regeneration. Allow the system to complete the regeneration automatically. The system will now be sanitized and producing soft water. Be sure to check for local codes, which may also specify sanitization methods.

General Information

GENERAL OPERATION

When the system is operating one of two displays will be shown: time of day or days until the next regeneration. Pressing UP or DOWN will toggle between the two choices.

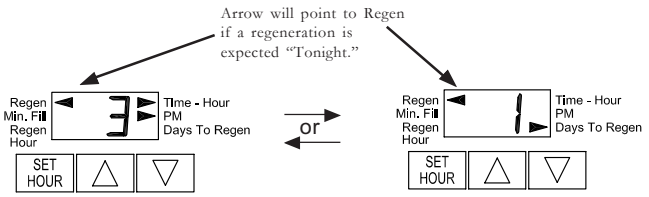

TO SET TIME OF DAY

In the event of a power outage, time of day needs to be reset. All other information will be stored in memory no matter how long the power outage. Please complete the steps as shown to the right. To access this mode, press SET HOUR.

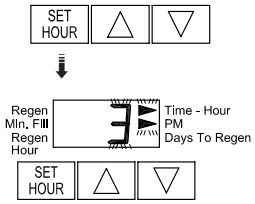

1. Accessed by pressing SET HOUR.
2. Adjust to the nearest hour using UP or DOWN. An arrow points to PM during p.m. hours.
3. Press SET HOUR to complete and return to normal operation.

TO SET TIME OF REGENERATION

For initial set-up or to make adjustments, please complete the steps as shown to the right. Access this mode by pressing SET HOUR and UP simultaneously for 3 seconds.

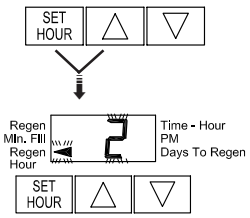

1. Accessed by pressing SET HOUR and UP simultaneously for 3 seconds.
2. Adjust time of regeneration hour using the UP or DOWN. An arrow points to PM during p.m. hours. Simultaneously press SET HOUR and DOWN to return to normal operation.

MANUAL REGENERATION

NOTE: For softeners, if brine tank does not contain salt, fill with salt and wait at least 2 hours before regeneration.

If you need to initiate a manual regeneration, either immediately, or tonight at the preprogrammed time (typically 2 a.m.), complete the following steps.

For Immediate Regeneration:
Press and hold UP and DOWN simultaneously until valve motor starts (typically 3 seconds).

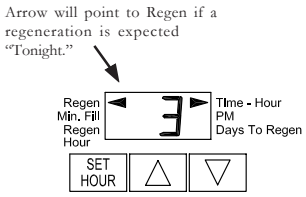

For Regeneration Tonight:
Press and release UP and DOWN simultaneously (notice that arrow points to Regen).

If the display shows "E1," "E2" or "E3" (for error), call a service technician.

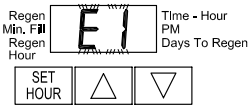

To **shut off water** to the system, please position arrow handles as shown in the **bypass operation** diagram below. If your valve doesn't look like the diagram below, contact your service technician for instructions on how to shut off water.

NORMAL OPERATION

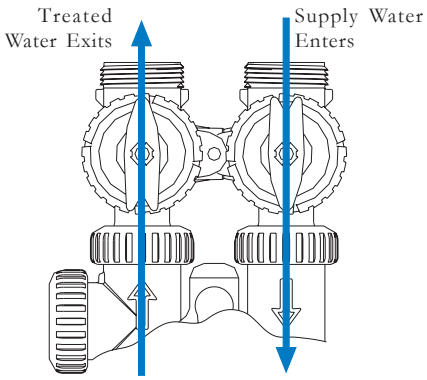

BYPASS OPERATION

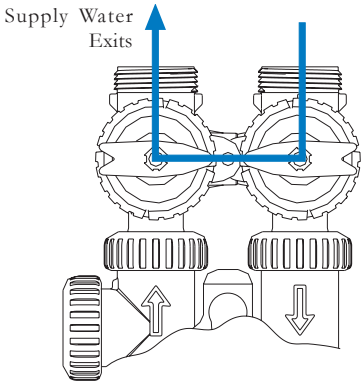

User Displays

General Operation

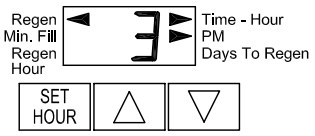

When the system is operating one of two displays will be shown. Pressing UP or DOWN button will alternate between the displays. One of the displays is always the current time of day (to the nearest hour). The second display is the days remaining until the next regeneration. If the days remaining is equal to one, a regeneration will occur at the next preset regeneration time. The user can scroll between displays as desired.

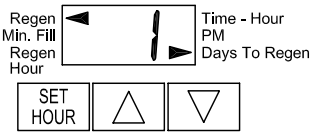

If the system has called for a regeneration that will occur at the preset time of regeneration, the arrow will point to Regen.

Regeneration Mode

Typically a system is set to regenerate at a time of low water usage. An example of a time with low water usage is when a household is asleep. If there is a demand for water when the system is regenerating, untreated water will be used.

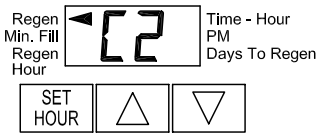

When the system begins to regenerate, the display will change to indicate the cycle of the regeneration process (see Table 3) that is occurring and an arrow will also point to Regen. The system will run through the steps automatically and will reset itself to provide treated water when the regeneration is completed.

Manual Regeneration

Sometimes there is a need to regenerate the system, sooner than when the system calls for it, usually referred to as a manual regeneration. There may be a period of heavy water usage because of guests or a heavy laundry day.

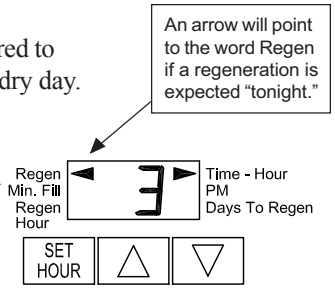

To initiate a manual regeneration at the preset delayed regeneration time, simultaneously press UP + DOWN buttons together and release. The arrow will point to the word Regen if a regeneration is expected "tonight." To cancel the regeneration simultaneously press UP + DOWN buttons and release.

To initiate a manual regeneration immediately, simultaneously press UP + DOWN buttons together for three seconds. The system will begin to regenerate immediately. The request cannot be cancelled.
Note: For softeners, if brine tank does not contain salt, fill with salt and wait at least two hours before regenerating.

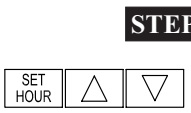

Set Time of Day

STEP 1U – Press SET HOUR

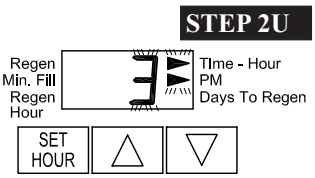

STEP 2U – Current time: Set the clock to the closest hour by using the UP and DOWN button. An arrow points to PM after 12. After a power outage, the time of day will need to be reset. Press SET HOUR to exit.

Power Loss

If the power goes out current time of day will need to be reset. If the power goes out while the system is regenerating, the cycle picks up where it was interrupted when the power returns. Note: The display will flash if a power outage has occurred.

Error Message

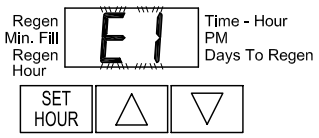

If "E1," "E2" or "E3" appears on the display contact the OEM for help. This indicates that the valve did not function properly.

STEP 1ID

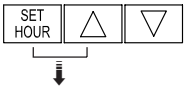

STEP 2ID

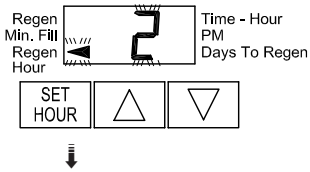

STEP 3ID

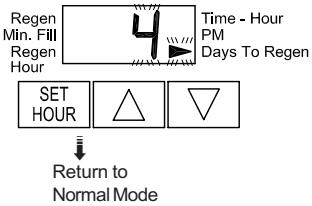

Installer Displays & Settings (1-99 Days Between Regeneration option)

STEP 1ID – From normal mode, press SET HOUR + UP buttons simultaneously for 3 seconds and release.

STEP 2ID – Regeneration Time: Set the clock to the hour the regeneration should occur by using the UP or DOWN buttons. An arrow points to PM after 12. Press SET HOUR to go to STEP 3ID.

STEP 3ID – Days To Regen: Set the number of days between regenerations. The allowable range is 1 to 99. Press SET HOUR to exit Installer Displays & Settings.

STEP 1I7

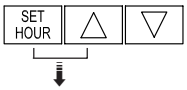

STEP 2I7

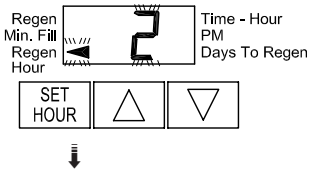

STEP 3I7

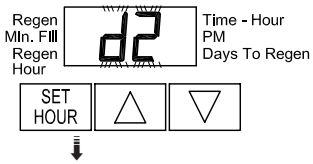

STEP 4I7

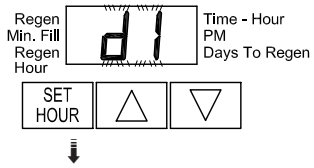

STEP 5I7

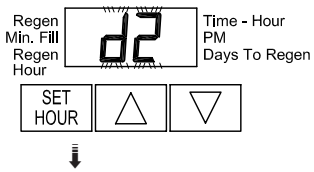

Installer Displays & Settings (7 day option)

STEP 1I7 – From normal mode, press SET HOUR + UP buttons simultaneously for 3 seconds and release.

STEP 2I7 – Regeneration Time: Set the clock to the hour the regeneration should occur by using the UP or DOWN buttons. An arrow points to PM after 12. Press SET HOUR to go to STEP 3I7.

STEP 3I7 – Current Day of Week: Set the current day of the week by using the UP or DOWN buttons (See chart at right for date codes). Press SET HOUR to go to STEP 4I7.

Display	Day of Week
d1	Sunday
d2	Monday
d3	Tuesday
d4	Wednesday
d5	Thursday
d6	Friday
d7	Saturday

STEP 4I7 – Sunday Regeneration: To regenerate on Sunday use the UP or DOWN button until the arrow points to Regen. If the arrow does not point to Regen a regeneration will not occur on Sunday. Press SET HOUR to go to STEP 5I7.

STEP 5I7 – Monday Regeneration: To regenerate on Monday use the UP or DOWN button until the arrow points to Regen. If the arrow does not point to Regen a regeneration will not occur on Monday. Press SET HOUR to go to STEP 6I7.

STEP 6I7

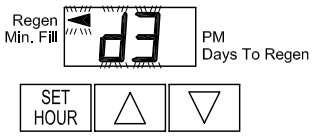

STEP 6I7 – Tuesday Regeneration: To regenerate on Tuesday use the UP or DOWN button until the arrow points to Regen. If the arrow does not point to Regen a regeneration will not occur on Tuesday. Press SET HOUR to go to STEP 7I7.

STEP 7I7

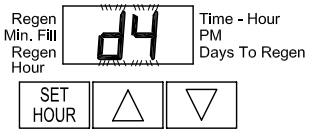

STEP 7I7 – Wednesday Regeneration: To regenerate on Wednesday use the UP or DOWN button until the arrow points to Regen. If the arrow does not point to Regen a regeneration will not occur on Wednesday. Press SET HOUR to go to STEP 8I7.

STEP 8I7

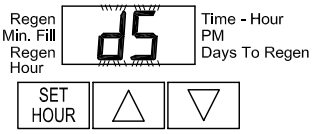

STEP 8I7 – Thursday Regeneration: To regenerate on Thursday use the UP or DOWN button until the arrow points to Regen. If the arrow does not point to Regen a regeneration will not occur on Thursday. Press SET HOUR to go to STEP 9I7.

STEP 9I7

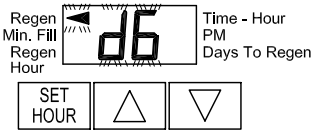

STEP 9I7 – Friday Regeneration: To regenerate on Friday use the UP or DOWN button until the arrow points to Regen. If the arrow does not point to Regen a regeneration will not occur on Friday. Press SET HOUR to go to STEP 10I7.

STEP 10I7

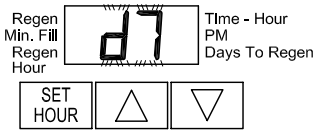

Return to
Normal Mode

STEP 10I7 – Saturday Regeneration: To regenerate on Saturday use the UP or DOWN button until the arrow points to Regen. If the arrow does not point to Regen a regeneration will not occur on Saturday. Press SET HOUR to exit Installer Displays & Settings.
NOTE: If all arrows are turned off in d1-d7, Days to Regen in the User Displays will always read 7 and a regeneration will never occur.

System Instructions

The control valve offers multiple procedures that allow the valve to be modified to suit the needs of the installation. These procedures are:

- System Setup
- Installer Displays & Settings (either 1-99 Days Between Regeneration option or 7-Day option)
- User Displays

These procedures can be accessed in any order. Details on each of the procedures are provided below and on the following pages.

When in operation, normal user displays show the time of day or days remaining before regeneration. When stepping through a procedure if no buttons are pressed within five minutes the display returns to a normal user display. Any changes made prior to the five minute time out are incorporated.

To quickly exit Installer Displays & Settings or Setup simultaneously press SET HOUR + DOWN. Any changes made prior to the exit are incorporated.

To reinitialize the control valve check to make sure the valve is in the User Display. Then simultaneously press SET HOUR + DOWN or unplug power source plug (black wire) on the circuit board, and plug back in.

System Setup

STEP 1SS

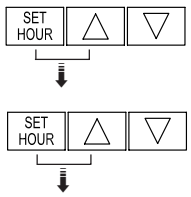

STEP 1SS – From normal mode, press SET HOUR + UP buttons simultaneously for 3 seconds and release. Then press SET HOUR + UP buttons simultaneously for 3 seconds and release.

STEP 2SS

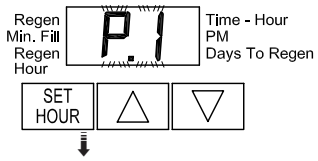

STEP 2SS – Choose the desired program by pressing the UP or DOWN buttons. Press SET HOUR button to go to Step 3SS.

Regeneration Cycles and Times for Different Programs

Program	All Times in Minutes				
	C1 1st Backwash	C2 Regenerate	C3 2nd Backwash	C4 Rinse	C5 Fill
P0	3	50	3	3	1-99
P1	8	50	8	4	1-99
P2	8	70	10	6	1-99
P3	12	70	12	8	1-99
P4	10	50	Skipped	8	1-99
P5	4	50	Skipped	4	1-99
P6	12	6	Skipped	12	1-99
P7	6	Skipped	Skipped	4	Skipped
P8	10	Skipped	Skipped	6	Skipped
P9	14	Skipped	Skipped	8	Skipped

Note: During regeneration the display will show C1, C2, etc. If the cycle is skipped, that cycle number will not be displayed.

STEP 3SS

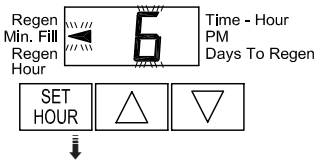

STEP 3SS – If program P0 through P6 was selected, enter in the minutes of fill using the UP or DOWN buttons. The allowable values vary from a low of 1 to a high of 99. If program P7, P8 or P9 was selected, dashes will appear for minutes of fill. Press SET HOUR button to go to Step 4SS. Note: For each minute of fill 0.5 gallons of water is added to the solution tank. With salt (sodium chloride) this equates to approximately $1^{1}/_{2}$ pounds of salt per minute of fill.

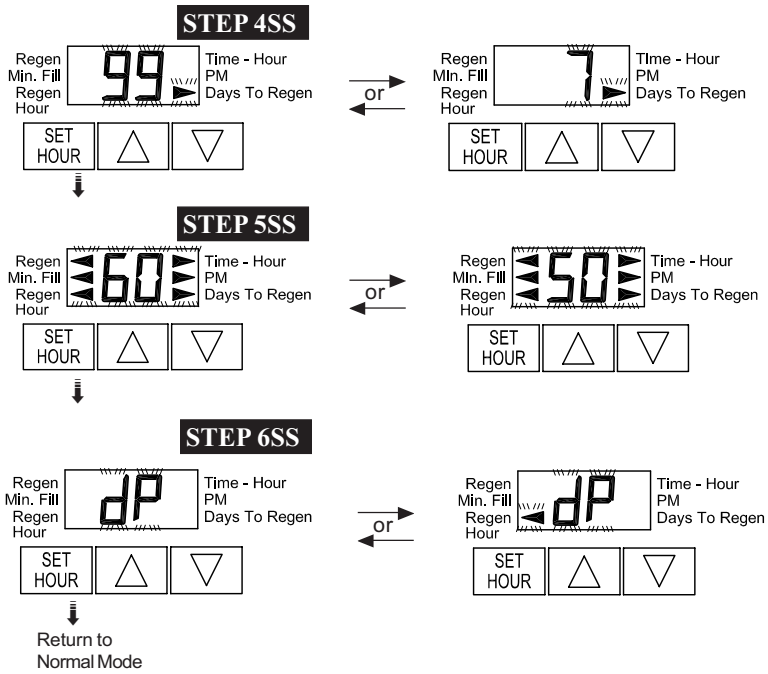

STEP 4SS — Use UP or DOWN buttons to switch between:
• 1-99 Days Between Regen; or
• 7-Day.
Press SET HOUR button to go to Step 5SS.

STEP 5SS — Use UP or DOWN buttons to switch between 60 Hz or 50 Hz option. Supply your own transformer if using 50 Hz option. Press SET HOUR button to got to Step 6SS.

STEP 6SS — If a differential pressure switch is installed and actuated:
• a regeneration will occur immediately if no arrow points at Regen Hour; or
• a regeneration will occur at the delayed regeneration hour if an arrow points at Regen Hour.
Use UP or DOWN buttons to switch between the two choices. If a differential switch is not installed the settings in this display are ignored. Press SET HOUR to exit system setup.

NOTE: A regeneration will be initiated or scheduled after the control has received a signal for five minutes.
A. Differential pressure switch connection
B. Motor wire connection
C. Transformer wire connection

Drawings and Part Numbers

Front Cover and Drive Assembly

Drawing No.	Order No.	Description	Quantity
1	V3175TC-01	WS1TC Front Cover ASY	1
2	V3107-01	WS1 Motor	1
3	V3106-01	WS1 Drive Bracket&Spring Clip	1
4	V3108TC	WS1TC PC Board	1
5	V3110	WS1 Drive Gear 12x36	3
6	V3109	WS1 Drive Gear Cover	1
	V3002TC	WS1TC Drive ASY	*
Not Shown	V3186	WS1 Transformer 110V-12V	1

* Drawing number parts 2 through 6 may be purchased as a complete assembly, part V3002TC.

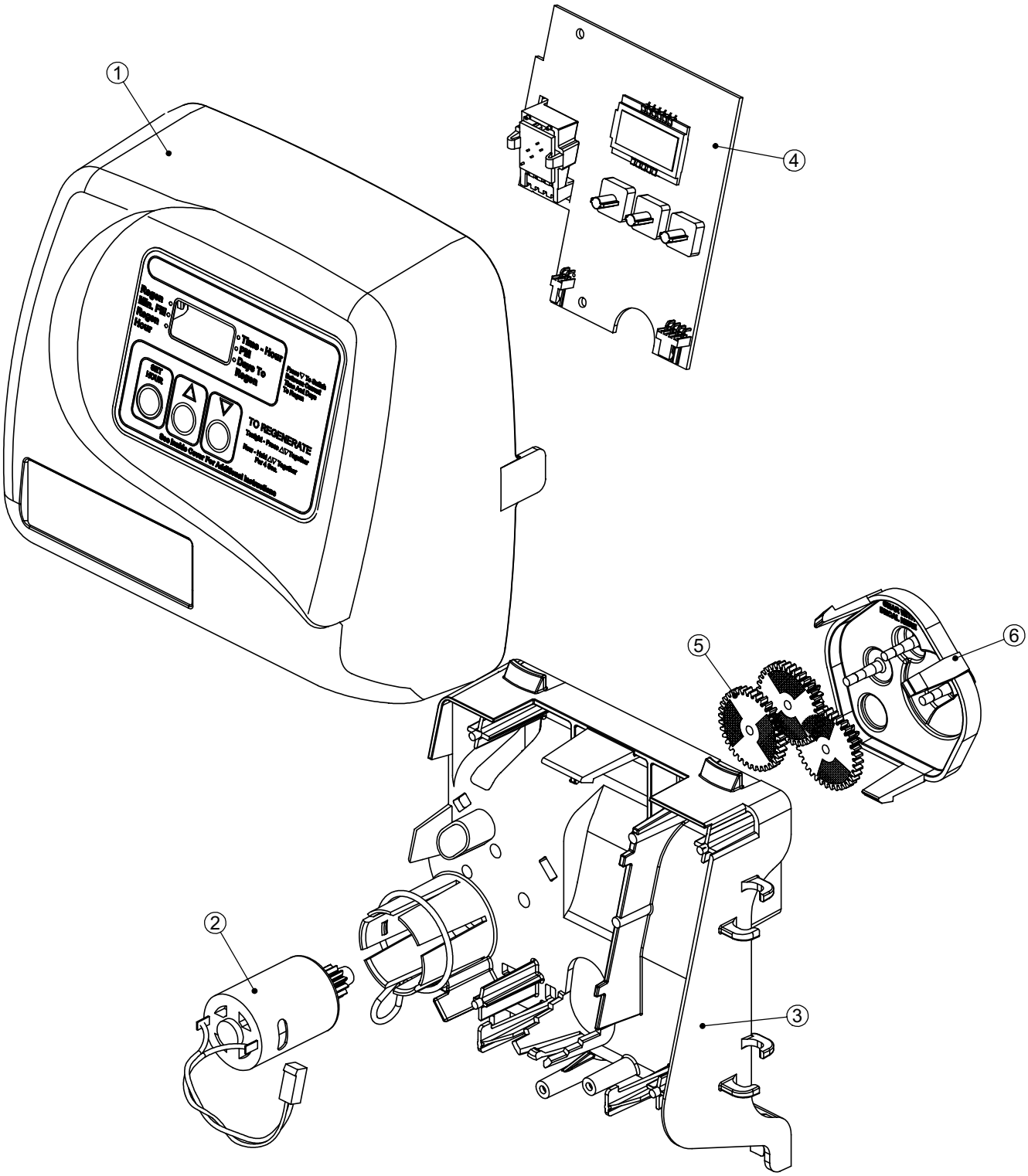

Drive Cap Assembly, Downflow Piston, Upflow Piston, Regenerant Piston and Spacer Stack Assembly

Drawing No.	Order No.	Description	Quantity
1	V3005	WS1 Spacer Stack Assembly	1
2	V3004	Drive Cap ASY	1
3	V3135	O-ring 228	1
4	V3011	WS1 Piston Downflow ASY	1
5	V3174	WS1 Regenerant Piston	1
6	V3180	O-ring 337	1

Note: The regenerant piston is not used in backwash only applications.

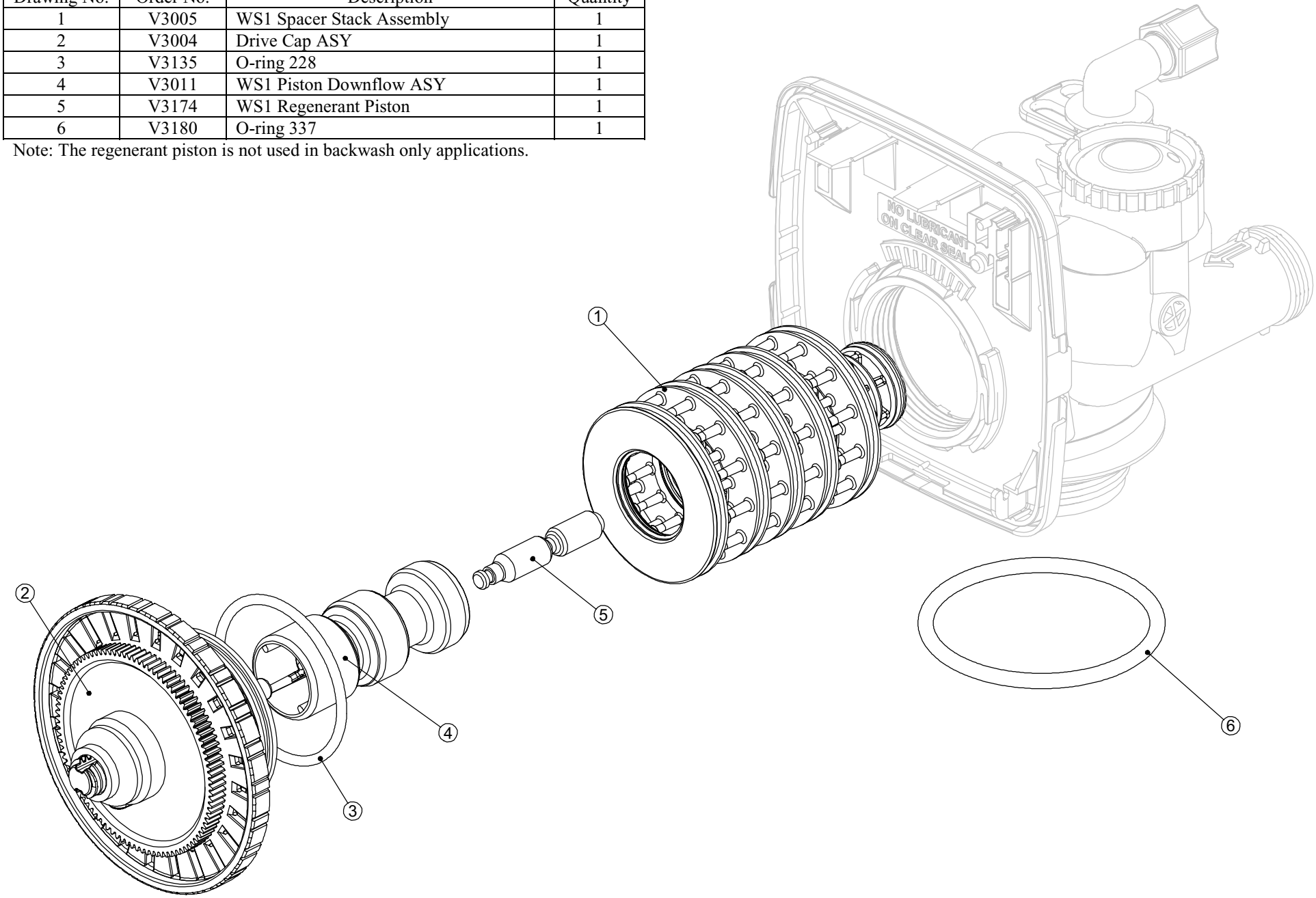

Injector Cap, Injector Screen, Injector, Plug and O-Ring

Drawing No.	Order No.	Description	Quantity
1	V3176	Injector Cap	1
2	V3152	O-ring 135	1
3	V3177	Injector Screen	1
4	V3010-1Z	WS1 Injector ASY Z Plug	1
5	V3010-1A	WS1 INJECTOR ASY A BLACK	1
	V3010-1B	WS1 INJECTOR ASY B BROWN	
	V3010-1C	WS1 INJECTOR ASY C VIOLET	
	V3010-1D	WS1 INJECTOR ASY D RED	
	V3010-1E	WS1 INJECTOR ASY E WHITE	
	V3010-1F	WS1 INJECTOR ASY F BLUE	
	V3010-1G	WS1 INJECTOR ASY G YELLOW	
	V3010-1H	WS1 INJECTOR ASY H GREEN	
	V3010-1I	WS1 INJECTOR ASY I ORANGE	
	V3010-1J	WS1 INJECTOR ASY J LIGHT BLUE	
	V3010-1K	WS1 INJECTOR ASY K LIGHT GREEN	
Not Shown	V3170	O-ring 011	*
Not Shown	V3171	O-ring 013	*

*The injector plug and the injector each contain one 011 (lower) and 013 (upper) o-ring.

Note: For downflow, injector is located in the down hole and injector plug in the up hole. For a filter that only backwashes, injector plugs are located in both holes, and regenerant piston must be removed.

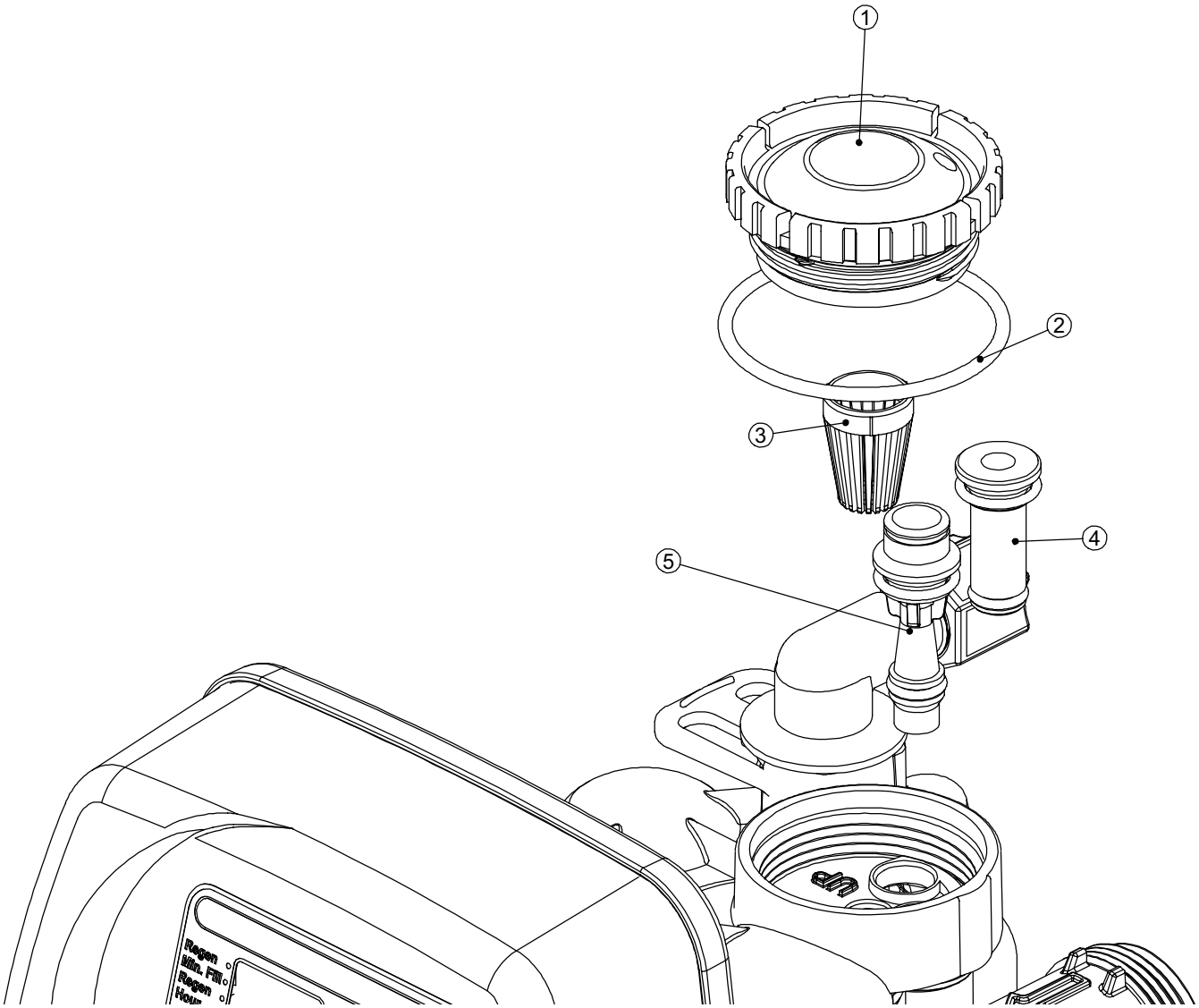

Refill and Refill Port Plug

Drawing No.	Order No.	Description	Quantity
1	V3195-01	WS1 Refill Port Plug ASY	This part is required for backwash only systems
2	H4615	Elbow Locking Clip	1
3	JCP-P-6	Polytube insert 3/8	1
4	JCPG-6PBLK	Nut 3/8	1
5	H4613	Elbow Cap 3/8	1
6	V3163	0-ring 019	1
7	V3165-01*	WS1 RFC Retainer ASY	1
8	V3182	WS1 RFC	1
Not Shown	H4650	Elbow ½” with nut and insert	Option

*Assembly includes WS1 RFC.

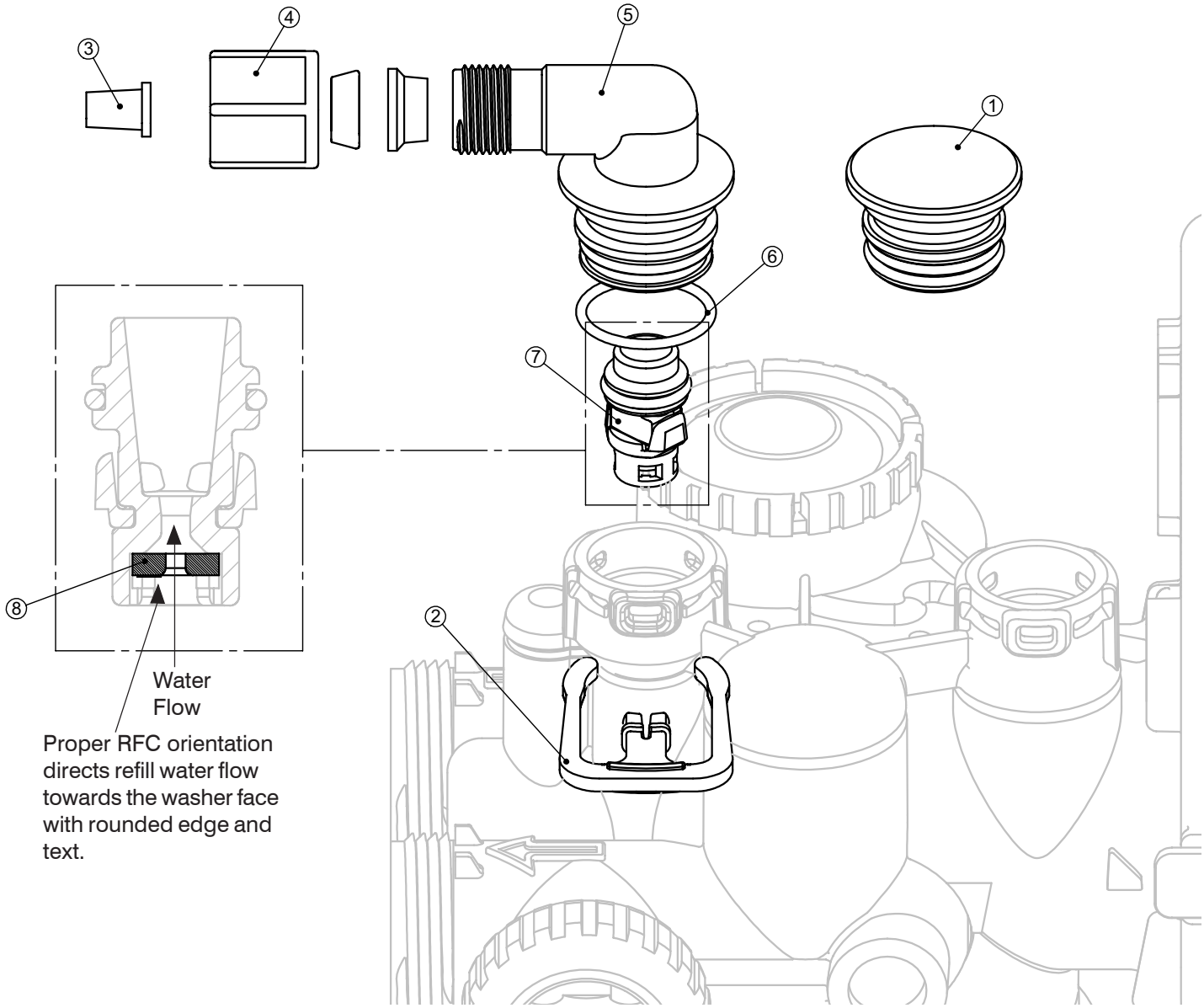

Drain Line – 3/4”

Drawing No.	Order No.	Description	Quantity
1	H4615	Elbow Locking Clip	1
2	PKP10TS8-BULK	Polytube insert 5/8	Option
3	V3192	WS1 Nut ¾ Drain Elbow	Option
4	V3158-01	WS1 Drain Elbow ¾ Male ASY	1
5	V3163	0-ring 019	1
6	V3159-01	WS1 DLFC Retainer ASY	1
7	V3162-007	WS1 DLFC 0.7 gpm for 3/4	One DLFC must be used if ¾” fitting is used
	V3162-010	WS1 DLFC 1.0 gpm for 3/4	
	V3162-013	WS1 DLFC 1.3 gpm for 3/4	
	V3162-017	WS1 DLFC 1.7 gpm for 3/4	
	V3162-022	WS1 DLFC 2.2 gpm for 3/4	
	V3162-027	WS1 DLFC 2.7 gpm for ¾	
	V3162-032	WS1 DLFC 3.2 f gpm or 3/4	
	V3162-042	WS1 DLFC 4.2 gpm for 3/4	
	V3162-053	WS1 DLFC 5.3 gpm for 3/4	
	V3162-065	WS1 DLFC 6.5 gpm for 3/4	
	V3162-075	WS1 DLFC 7.5 gpm for 3/4	
	V3162-090	WS1 DLFC 9.0 gpm for 3/4	
	V3162-100	WS1 DLFC 10.0 gpm for 3/4	

Valves are shipped without drain line flow control (DLFC) – install DLFC before using. Valves are shipped without ¾” nut for drain elbow (polytube installation only) and 5/8” polytube insert (polytube installation only).

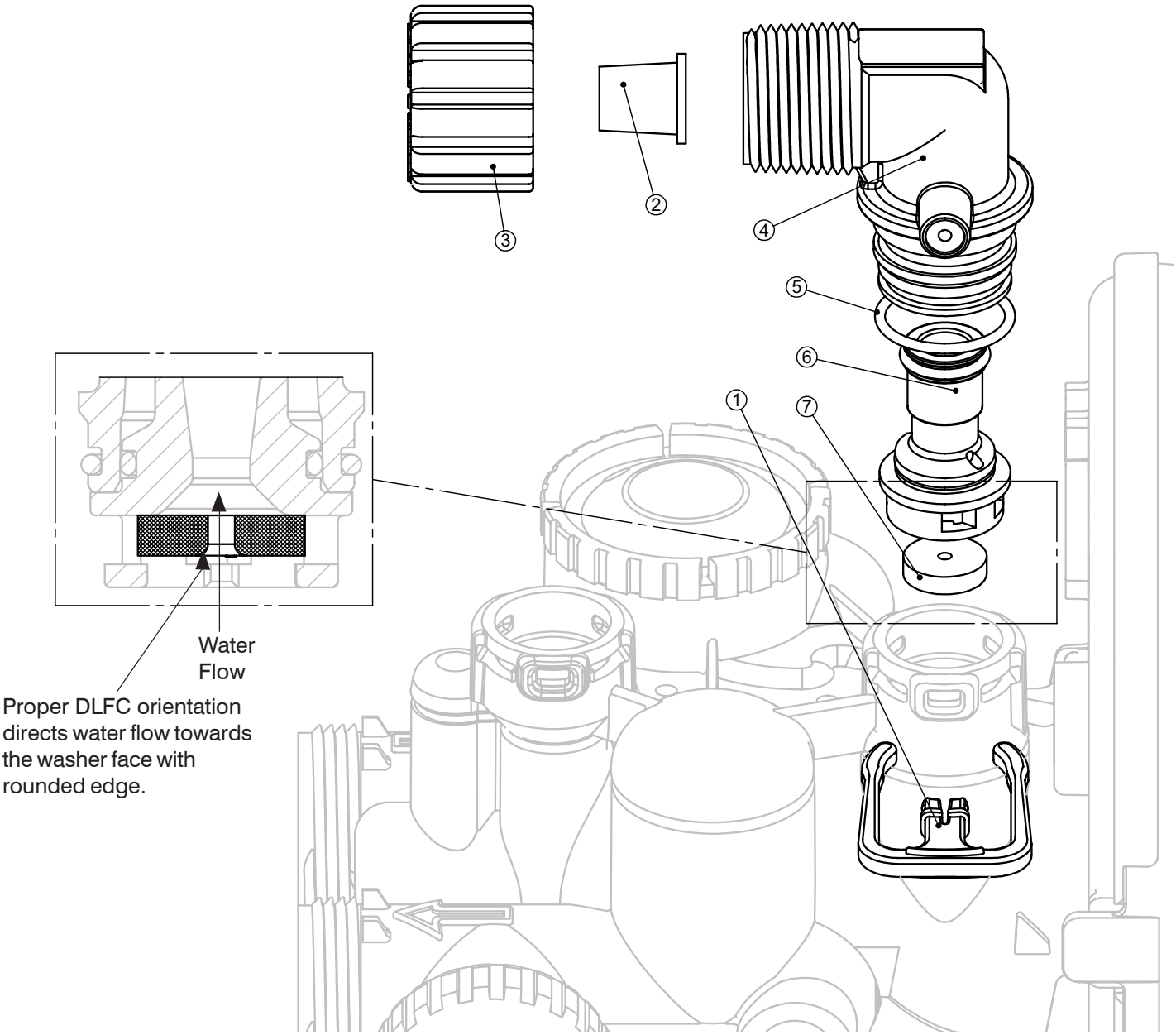

Drain Line – 1”

Drawing No.	Order No.	Description	Quantity
1	H4615	Elbow Locking Clip	1
2	V3008-02	WS1 Drain FTG 1 Straight	1
3*	V3166	WS1 Drain FTG Body 1	1
4*	V3167	WS1 Drain FTG Adapter 1	1
5*	V3163	0-ring 019	1
6*	V3150	WS1 Split Ring	1
7*	V3151	WS1 Nut 1" QC	1
8*	V3105	O-ring 215	1
9	V3190-090	WS1 DLFC 9.0 gpm for 1	One DLFC must be used if 1” fitting is used
	V3190-100	WS1 DLFC 10.0 gpm for 1	
	V3190-110	WS1 DLFC 11.0 gpm for 1	
	V3190-130	WS1 DLFC 13.0 gpm for 1	
	V3190-150	WS1 DLFC 15.0 gpm for 1	
	V3190-170	WS1 DLFC 17.0 gpm for 1	
	V3190-200	WS1 DLFC 20.0 gpm for 1	
	V3190-250	WS1 DLFC 25.0 gpm for 1	

* Can be ordered as a set order number V3008-02, description: WS1 Drain FTG 1 Straight.

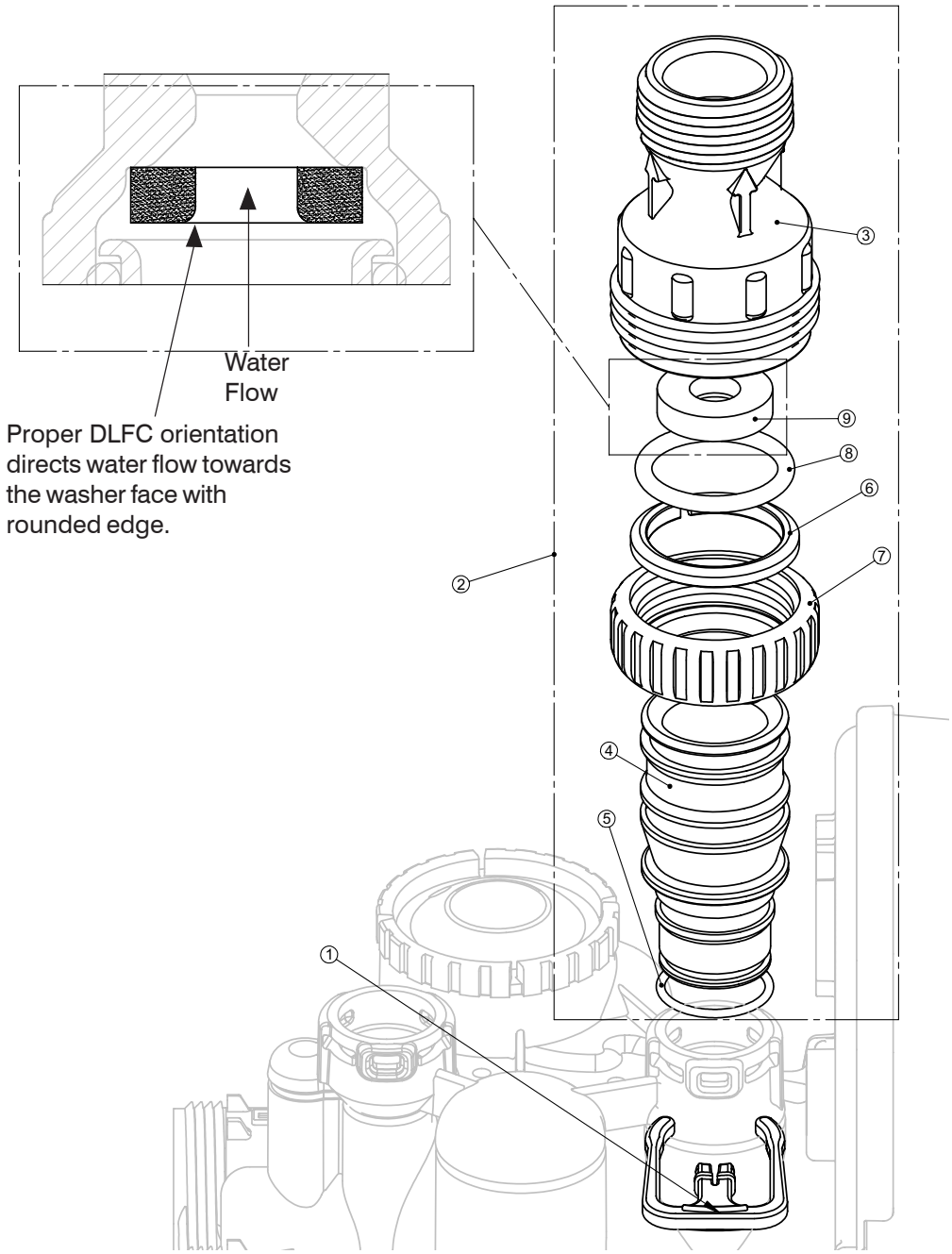

Meter Plug

Drawing No.	Order No.	Description	Quantity
1	V3151	WS1 Nut 1" QC	1
2	V3105	0-ring 215	1
3	V3003-01	WS1 Meter Plug ASY	1

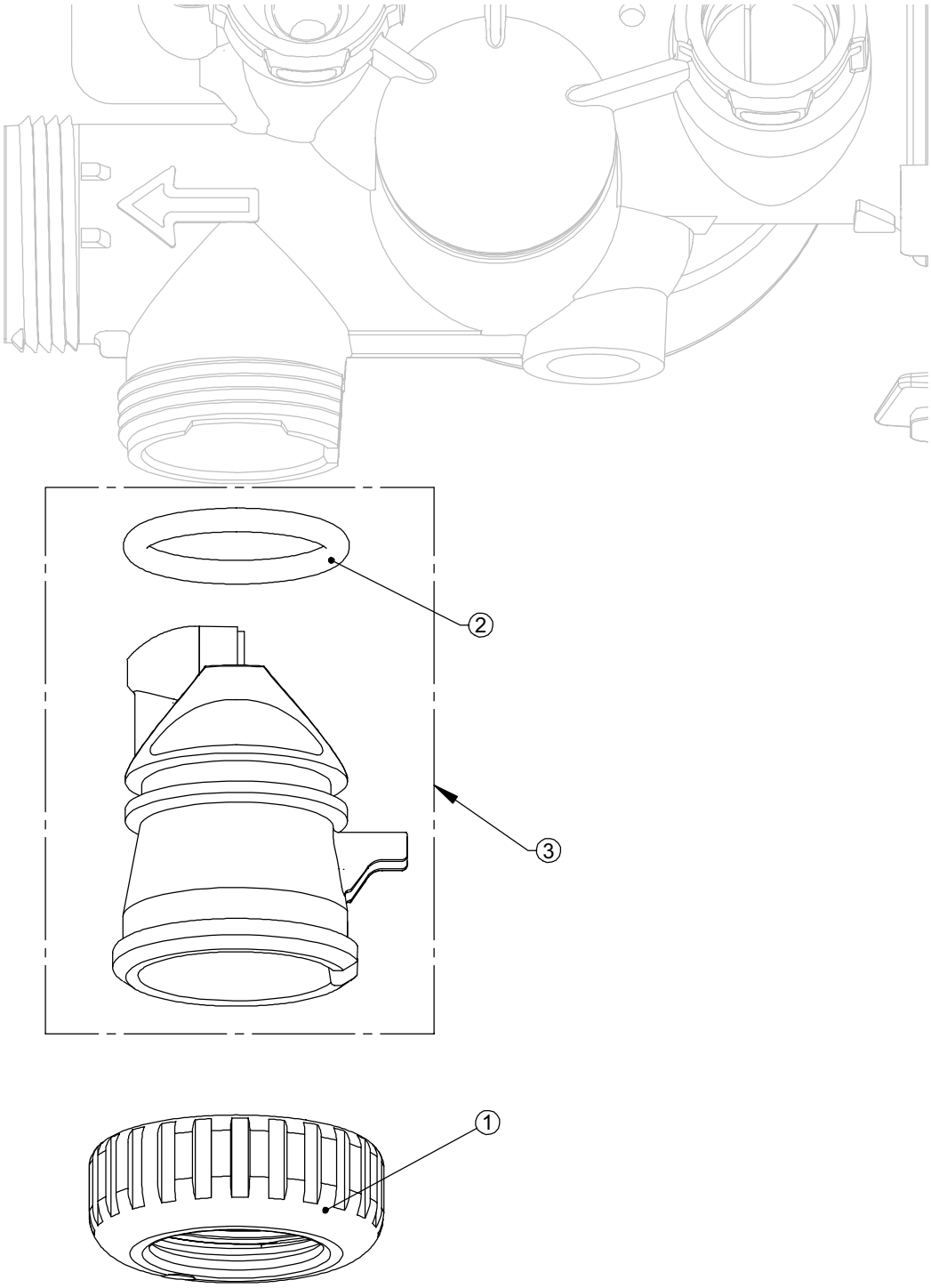

Installation Fitting Assemblies

Order No: **V3007**
Description: **WS1 Fitting 1” PVC Male NPT Elbow Assembly**

Drawing No	Order No.	Description	Quantity
1	V3151	WS1 Nut 1” Quick Connect	2
2	V3150	WS1 Split Ring	2
3	V3105	O-Ring 215	2
4	V3149	WS1 Fitting 1 PVC Male NPT Elbow	2

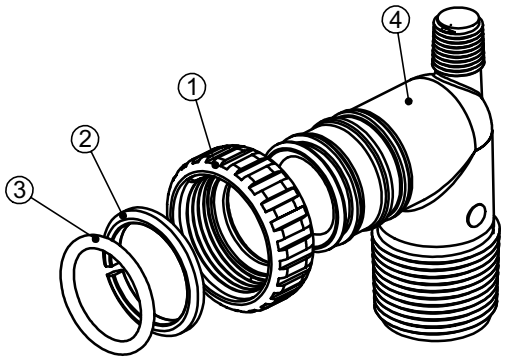

Order No: **V3007-01**
Description: **WS1 Fitting ¾” & 1” PVC Solvent 90° ASY**

Drawing No.	Order No.	Description	Quantity
1	V3151	WS1 Nut 1” Quick Connect	2
2	V3150	WS1 Split Ring	2
3	V3105	O-Ring 215	2
4	V3189	WS1 Fitting ¾&1 PVC Solvent 90	2

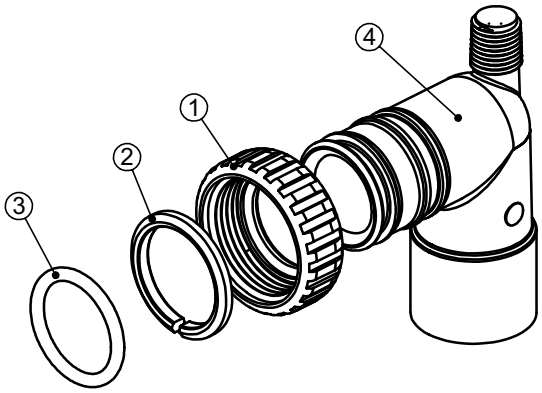

Order No: **V3007-02**
Description: **WS1 Fitting 1” Brass Sweat Assembly**

Drawing No.	Order No.	Description	Quantity
1	V3151	WS1 Nut 1” Quick Connect	2
2	V3150	WS1 Split Ring	2
3	V3105	O-Ring 215	2
4	V3188	WS1 Fitting 1 Brass Sweat	2

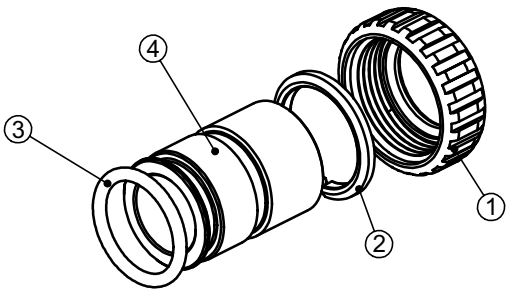

Order No: **V3007-03**
Description: **WS1 Fitting 3/4” Brass Sweat Assembly**

Drawing No.	Order No.	Description	Quantity
1	V3151	WS1 Nut 1” Quick Connect	2
2	V3150	WS1 Split Ring	2
3	V3105	O-Ring 215	2
4	V3188-01	WS1 Fitting ¾ Brass Sweat	2

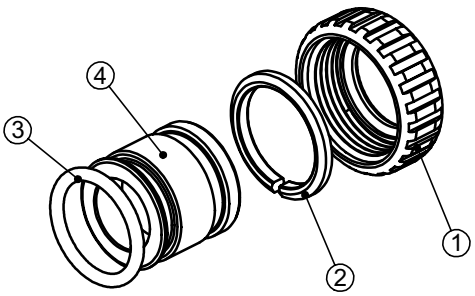

Bypass Valve

Drawing No.	Order No.	Description	Quantity
1	V3151	WS1 Nut 1” Quick Connect	2
2	V3150	WS1 Split Ring	2
3	V3105	O-Ring 215	2
4	V3145	WS1 Bypass 1” Rotor	2
5	V3146	WS1 Bypass Cap	2
6	V3147	WS1 Bypass Handle	2
7	V3148	WS1 Bypass Rotor Seal Retainer	2
8	V3152	O-ring 135	2
9	V3155	O-ring 112	2
10	V3156	O-ring 214	2

(Not Shown) Order No. V3191-01, Description: WS1 Bypass Vertical Adapter Assembly

Order No.	Description	Quantity
V3151	WS1 Nut 1” Quick Connect	2
V3150	WS1 Split Ring	2
V3105	O-Ring 215	2
V3191-01	WS1 Bypass Vertical Adapter Assembly	2

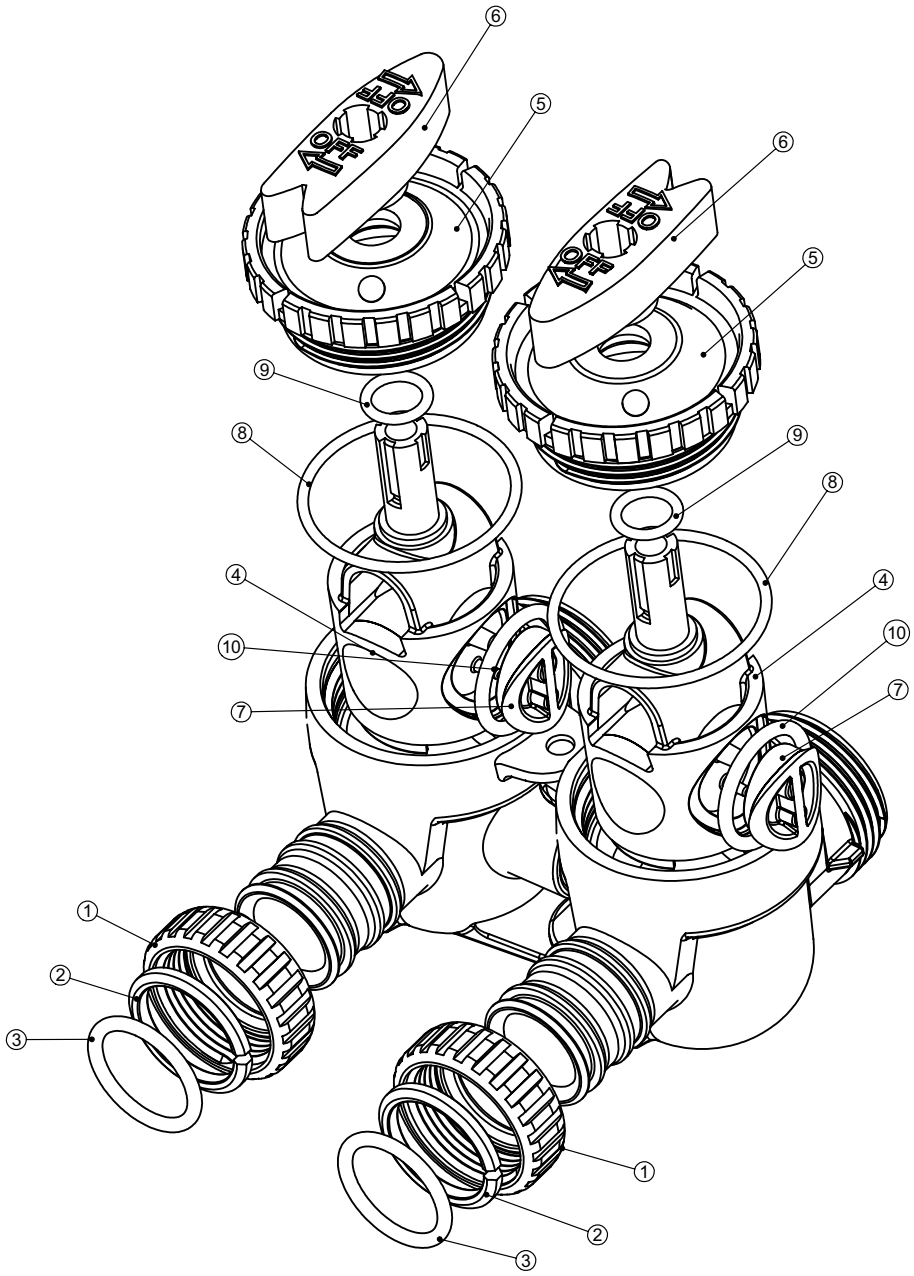

Service Wrench

Although no tools are necessary to assemble or disassemble the valve, the WS1 wrench (shown in various positions on the valve) may be purchased to aid in assembly or disassembly.

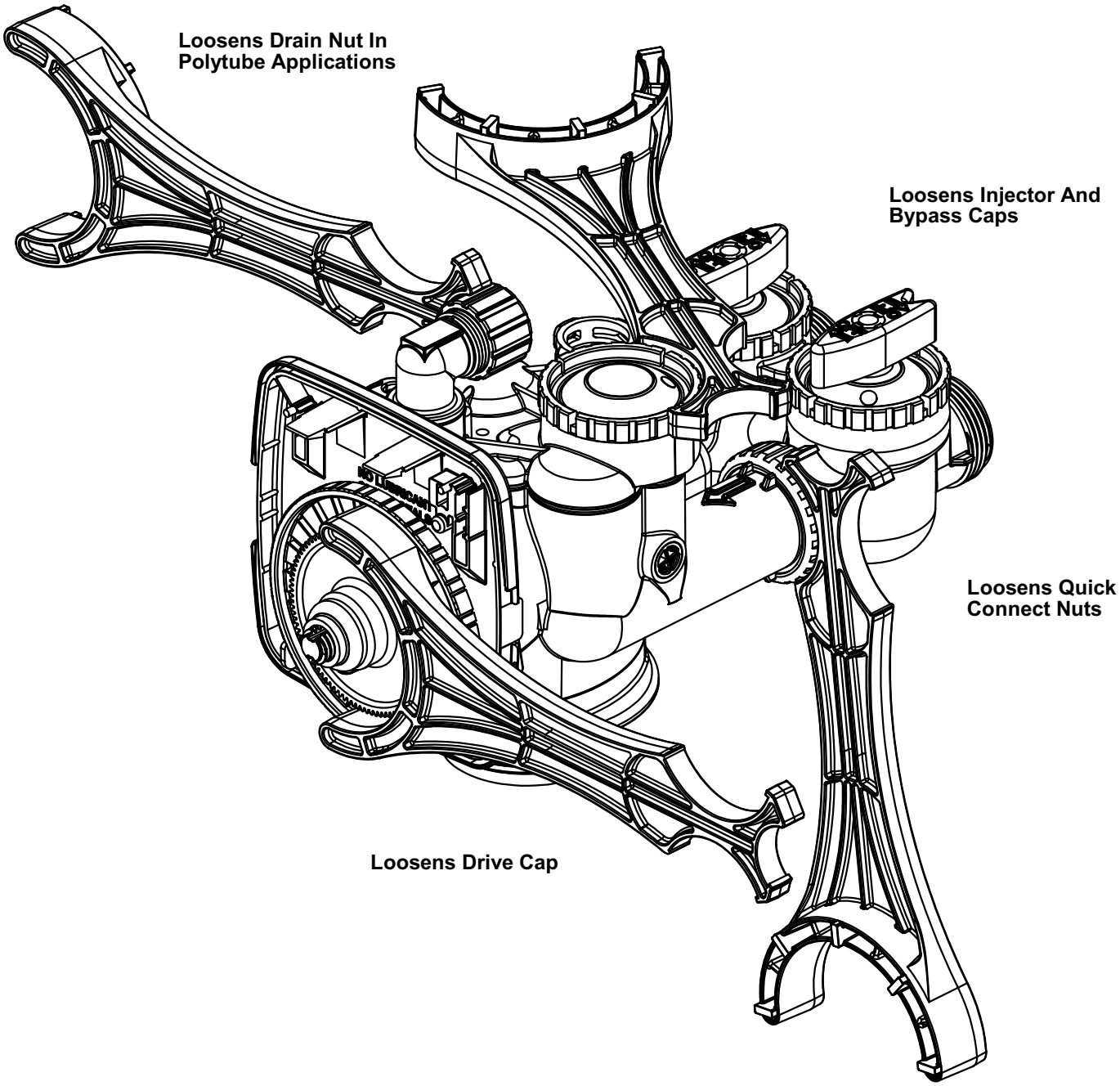

Service Instructions

Drive Assembly

Remove the valve cover to access the drive assembly.

Disconnect the power source plug (black wire) from the PC board prior to disconnecting the motor plug from the PC board. The motor plug connects to the two-pin jack on the left-hand side of the PC board. The power source plug connects to the four-pin jack.

The PC board can be removed separately from the drive bracket but it is not recommended. Do not attempt to remove the display panel from the PC board. Handle the board by the edges. To remove the PC board from the drive bracket, unplug the power and motor plugs from the PC board. Lift the middle latch along the top of the drive bracket while pulling outward on the top of the PC board. The drive bracket has one plastic pin that fits into the hole on the lower edge of the PC board. Once the PC board is tilted about 45° from the drive bracket it can be lifted off of the pin. To reinstall the PC board, position the lower edge of the PC board so that the hole in the PC board lines up with the plastic pin. Push the top of the PC board towards the valve. Align the upper hole on lefthand side of PC board with the pin and push in until the PC board snaps under the middle latch, weave the power wire into the holders and reconnect the motor and power plugs.

The drive bracket must be removed to access the drive cap assembly and pistons or the drive gear cover. It is not necessary to remove the PC board from the drive bracket to remove the drive bracket. To remove the drive bracket start by removing the plug for the power source. Unweave the wire from the side holders. Two tabs on the top of the drive back plate hold the drive bracket in place. Simultaneously lift the two tabs and gently ease the top of the drive bracket towards your body. The lower edge of the drive bracket has two notches that rest on the drive back plate. Lift up and outward on the drive bracket to disengage the notches.

To reassemble seat the bottom of the drive bracket so the notches are engaged at the bottom of the drive back plate. Push the top of the drive bracket towards the two latches. The drive bracket may have to be lifted slightly to let the threaded piston rod pass through the hole in the drive bracket. Maintain a slight engaging force on top of the drive bracket while deflecting the bracket slightly to the left by pressing on the side of the upper right corner. This helps the drive gears mesh with the drive cap assembly. The drive bracket is properly seated when it snaps under the latches on the drive back plate. If resistance is felt before latching, then notches are not fully engaged, the piston rod is not in hole, the power wire is jammed between the drive bracket and drive back plate, or the gear is not engaging the drive cap assembly.

To inspect drive gears, the drive gear cover needs to be removed. The drive gear cover is held in place on the drive bracket by three clips. The largest of the three clips is always orientated to the bottom of the drive bracket. Before trying to remove the drive gear cover, the drive bracket must be removed from the drive back plate. The drive gear cover can be removed from the drive bracket without removing the motor or the PC board. Simultaneously, push in and down on the large clip at the bottom and the clip on the left-hand side of the drive bracket behind the PC board. Keep your other fingers behind the drive gear cover so the drive gears do not drop on the ground.

Replace broken or damaged drive gears. Do not lubricate any of the gears. Avoid getting any foreign matter on the reflective coating because dirt or oils may interfere with pulse counting.

The drive gear cover only fits on one way, with the large clip orientated towards the bottom. If all three clips are outside of the gear shroud on the drive bracket the drive gear cover slips easily into place.

The drive bracket does not need to be removed from the drive plate if the motor needs to be removed. To remove the motor, disconnect the power and motor plugs from the jacks on the PC board. Move the spring clip loop to the right and hold. Rotate the motor at least a ¼ turn in either direction before gently pulling on the wire connectors to remove the motor. Pulling directly on the wires without rotating the motor may break the wires off the motor.

Replace the motor if necessary. Do not lubricate the motor or the gears. When reinstalling the motor gently turn the motor while inserting so that the gear on the motor meshes with the gears under the drive gear cover and the small plastic bulge engages one of the slots on the motor housing. Reconnect the motor plug to the two pronged jack on the lower left hand side of the PC board. If motor will not easily engage with drive gear when reinstalling, lift and slightly rotate motor before reinserting.

Replace the valve cover. After completing any valve maintenance, press and hold SET HOUR and DOWN buttons for 3 seconds or unplug power source jack (black wire) from the circuit board and plug back in. This resets the electronics and establishes the service piston position.

Drive Cap Assembly, Main Piston and Regenerant Piston

The drive assembly must be removed to access the drive cap assembly. The drive cap assembly must be removed to access the piston(s). The drive cap assembly is threaded into the control valve body and seals with an o-ring. To remove the drive cap assembly use the special plastic wrench or insert a ¼" to ½" flat bladed screwdriver into one of the slots around the top 2" of the drive cap assembly so it engages the notches molded into the drive back plate around the top 2" of the piston cavity. See Figure 5. The notches are visible through the holes. Lever the screwdriver so the drive cap assembly turns counter clockwise. Once loosened unscrew the drive cap assembly by hand and pull straight out.

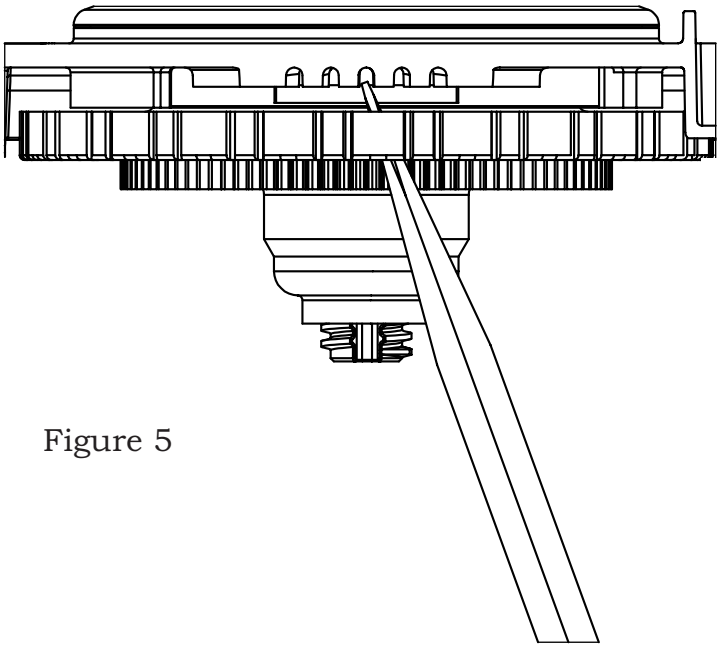

Figure 5

The drive cap assembly contains the drive cap, the main drive gear, drive cap spline, piston rod and various other parts that should not be dissembled in the field. The only replaceable part on the drive cap assembly is the o-ring. Attached to the drive cap assembly is the main piston and, if a regenerant is used, a regenerant piston.

The regenerant piston (the small diameter one behind the main piston) is removed from the main piston by unsnapping it from its latch. Chemically clean in dilute sodium bisulfite or vinegar or replace the regenerant piston if needed. To remove the main piston fully extend the piston rod and then unsnap the main piston from its latch by pressing on the side with the number. Chemically clean in dilute sodium bisulfite or vinegar or replace the main piston.

Reattach the main piston to the drive cap assembly. Reattach the regenerant piston (if needed) to the main piston. Do not lubricate the piston rod, main piston or regenerant piston. Lubricant will adversely affect the red or clear lip seals. Reinsert the drive cap assembly and piston into the spacer stack assembly and hand tighten the drive cap assembly. Continue to tighten the drive cap assembly using the special wrench or a screwdriver as a ratchet until the black o-ring on the spacer stack assembly is no longer visible through the drain port. Excessive force can break the notches molded into the drive back plate. Make certain that the main drive gear still turns freely. The exact position of the piston is not important as long as the main drive gear turns freely.

Reattach the drive assembly to the control valve and connect all plugs. After completing any valve maintenance, press and hold SET HOUR and DOWN buttons for 3 seconds or unplug power source jack (black wire) from the circuit board and plug back in. This resets the electronics and establishes the service piston position.

Spacer Stack Assembly

To access the spacer stack assembly remove the drive assembly, drive cap assembly and piston. The spacer stack assembly can be removed easily without tools by using thumb and forefinger. Inspect the black o-rings and red or clear lip seals for wear or damage. Replace the entire stack if necessary. The spacer stack assembly has been 100% tested at the factory to insure proper orientation of one way seals. Do not disassemble the stack.

The spacer stack assembly may be chemically cleaned (dilute sodium bisulfite or vinegar) or wiped with a soft cloth.

The spacer stack assembly can be pushed in to the control valve body bore by hand. Since the spacer stack assembly can be compressed it is easier to use a blunt object (5/8" to 1-1/8" in diameter) to push the center of the assembly into the control valve body. The assembly is properly seated when at least four threads are exposed (approximately 5/8"). Do not force the spacer stack assembly in. The control valve body bore interior can be lubricated with silicone to allow for easy insertion of the entire stack. Do not use silicone or any other type of lubricant on the red or clear lip seals or the piston.

Reattach the drive cap assembly and piston(s) and the drive assembly.

After completing any valve maintenance, press and hold SET HOUR and DOWN buttons for 3 seconds or unplug power source jack (black wire) from the circuit board and plug back in. This resets the electronics and establishes the service piston position.

Injector Cap, Screen, Injector Plug and Injector

Unscrew the injector cap and lift off. Loosen cap with special plastic wrench or pliers if necessary. Attached to the injector cap is a screen. Remove the screen and clean if fouled.

The plug and/or injector can be pried out with a small screwdriver. The plug can be wiped clean. If the plug leaks replace the entire plug. The injector consists of a throat and a nozzle. Chemically clean the injector with vinegar or sodium bisulfite. The holes can be blown out with air. Both pieces have small diameter holes that control the flow rates of water to insure that the proper concentration of regenerant is used. Sharp objects, which can score the plastic, should not be used to clean the injector. Scoring the injector or increasing the diameter of the hole could change the operating parameters of the injector.

Two holes are labeled DN and UP. Check for compliance with one of the following:

a. for down flow systems, the appropriate size injector is located in the "DN" hole, a plug is in the "UP" hole and that the piston is a combination of the down flow main piston and the regenerant piston; or
b. for backwash only systems, a plug is in the "DN" hole and in the "UP" hole, and that the piston only has a down flow main piston (the regenerant piston must be removed) and a plug is in the refill flow control position.

Push the plug(s) and/or injectors firmly in place, replace the screen and hand tighten the injector cap.

Refill Flow Control Assembly or Refill Port Plug

To clean or replace the refill flow control, pull out the elbow-locking clip and then pull straight up on the elbow. Replace the elbow locking clip in the slot so that it is not misplaced. Twist to remove the white flow control retainer. The flow control can be removed by prying upward through the side slots of the retainer with a small blade flat screwdriver.

Chemically clean the flow control or the white flow control retainer using dilute sodium bisulfite or vinegar. Do not use a wire brush. If necessary, replace the flow control, o-ring on the flow control retainer, or the o-ring on the elbow.

Reseat the flow control so the rounded end is visible in the flow control. Reseat the white flow control retainer by pushing the retainer into the elbow until the o-ring seats. Remove locking clip, push down on elbow to reseat and insert locking clip.

Do not use Vaseline, oils, or other unacceptable lubricants on o-rings. A silicon lubricant may be used on the o-ring on the elbow or the white retainer.

Meter Plug

This control valve does not come equipped with a meter, instead a plug is installed. The plug should not need to be serviced.

To remove the meter plug assembly, unscrew the meter cap on the left side of the control valve. Pliers may be used to unscrew the nut if necessary.

With the nut removed, a slot at the top of the meter plug is visible. Twist a flat blade screwdriver in the slot between the control valve body and the meter plug. When the meter plug is part way out it is easy to remove the meter plug from the housing.

Do not use a wire brush to clean. Wipe with a clean cloth or chemically clean in dilute sodium bisulfite or vinegar.

Do not use Vaseline, oils, or other unacceptable lubricants on the o-ring. A silicon lubricant may be used on the black o-ring.

Reinsert the meter plug into the side slot. Hand tighten the nut. Do not use a pipe wrench to tighten nut.

Bypass Valve

The working parts of the bypass valve are the rotor assemblies that are contained under the bypass valve caps. Before working on the rotors, make sure the system is depressurized. Turn the red arrow shaped handles towards the center of the bypass valve and back to the arrow direction several times to ensure rotor is turning freely.

The nuts and caps are designed to be unscrewed or tightened by hand. If necessary a pliers can be used to unscrew the nut or cap. Do not use a pipe wrench to tighten or loosen nuts or caps. Do not place screwdriver in slots on caps and/or tap with a hammer. To access the rotor, unscrew the cap and lift the cap, rotor and handle out as one unit. Twisting the unit as you pull it out will help to remove it more easily. There are three o-rings: one under the rotor cap, one on the rotor stem and the rotor seal. Replace worn o-rings. Clean rotor. Reinstall rotor.

When reinstalling the red arrow handles be sure that:

1. O-rings on both rotors face to the right when being viewed from the front of the control valve when the handle pointers are lined up with the control valve body arrows; or
2. Arrows point toward each other in the bypass position.

Since the handles can be pulled off, they could be accidentally reinstalled 180°° from their correct orientation. To install the red arrow handles correctly, keep the handles pointed in the same direction as the arrows engraved on the control valve body while tightening the bypass valve caps.

After completing any valve maintenance, press and hold SET HOUR and DOWN buttons for 3 seconds or unplug power source jack (black wire) from the circuit board and plug back in. This resets the electronics and establishes the service piston position.

Table 6
Troubleshooting Procedures

Problem	Possible Cause	Solution
1. Timer does not display time of day	a. Transformer unplugged	a. Connect power
	b. No electric power at outlet	b. Repair outlet or use working outlet
	c. Defective transformer	c. Replace transformer
	d. Defective PC board	d. Replace PC board
2. Timer does not display correct time of day	a. Switched outlet	a. Use uninterrupted outlet
	b. Power outage	b. Reset time of day
	c. Defective PC board	c. Replace PC board
3. Control valve regenerates at wrong time of day	a. Power outages	a. Reset control valve to correct time of day
	b. Time of day not set correctly	b. Reset to correct time of day
	c. Time of regeneration incorrect	c. Reset regeneration time
4. E1, E2 or E3 E1 - Unable to recognize start of regeneration E2 – Unexpected stall E3 – Motor ran to long, timed out trying to reach the next cycle position or trying to reach home position	a. Control valve has just been serviced	a. Press SET HOUR and DOWN for 3 seconds or unplug power source jack (black wire) from the circuit board and plug back in to reset control valve
	b. Foreign matter is lodged in control valve	b. Check piston and spacer stack assembly for foreign matter
	c. High drive forces on piston	c. Replace piston(s) and spacer stack assembly
	d. Control valve piston not in home position	d. Press SET HOUR and DOWN for 3 seconds or unplug power source jack (black wire) from the circuit board and plug back in to reset control valve
	e. Motor not inserted fully to engage pinion, motor wires broken or disconnected, motor failure	e. Check motor and wiring. Replace motor if necessary
	f. Drive gear label dirty or damaged, missing or broken gear	f. Replace or clean drive gear
	g. Drive bracket incorrectly aligned to back plate	g. Reseat drive bracket properly
	h. PC board is damaged or defective	h. Replace PC board
	i. PC board incorrectly aligned to drive bracket	i. Ensure PC board is correctly snapped on to drive bracket
5. Control valve stalled in regeneration	a. Motor not operating	a. Replace motor
	b. No electric power at outlet	b. Repair outlet or use working outlet
	c. Defective transformer	c. Replace transformer
	d. Defective PC board	d. Replace PC board
	e. Broken drive gear or drive cap assembly	e. Replace drive gear or drive cap assembly
	f. Broken piston retainer	f. Replace drive cap assembly
	g. Broken main or regenerant piston	g. Replace main or regenerant piston
6. Control valve does not regenerate automatically when UP and DOWN buttons are depressed and held	a. Transformer unplugged	a. Connect transformer
	b. No electric power at outlet	b. Repair outlet or use working outlet
	c. Broken drive gear or drive cap assembly	c. Replace drive gear or drive cap assembly
	d. Defective PC board	d. Replace PC board
7. Control valve does not regenerate automatically but does when UP and DOWN buttons are depressed	a. Defective PC board	a. Replace PC board
	b. Set-up error	b. Check control valve set-up procedure

APPENDIX B

GAC TREATMENT SYSTEM OPERATION, MONITORING, & MAINTENANCE DATA COLLECTION FORM

Highway 260 and Main WQARF
Wellhead Treatment Operation and Maintenance Form

Address:	Operator:	Date:

Time On-Site:	Time Off-Site
Totalizer On-Site:	Totalizer Off-Site:

Pressure Readings			
Filter/Vessel	**Upstream Pressure (psi)**	**Downstream Pressure (psi)**	**Difference (psi)**
Pressure Tank			
Pre-Sediment Filter			
Lead GAC Vessel			
Lag GAC Vessel			
Post-Sediment Filter			
Flow during current pressure readings (gpm):		Flow during previous pressure readings (gpm):	

Sediment Filters			
Filter	**Filter Changed?**	**Date of Previous change**	**Notes (discolored, damaged, buid-up, etc.?)**
Pre-Sediment Filter	Yes / No		
Post-Sediment Filter	Yes / No		

GAC Vessels					
Vessel	**Carbon Changed?**	**Date of Previous change**	**Manual Backflush Performed?**	**Date of Previous Backflush**	**Notes**
Lead GAC	Yes / No		Yes / No		
Lag GAC	Yes / No		Yes / No		
Is automatic backflush enabled?_____ If so, at what time interval?_____days _____ a.m/p.m					

Samples			
Location	**Sample ID**	**Time**	**Analysis**
Influent			
Midpoint			
Effluent			

Notes:

APPENDIX C

SPECIFIC PROPERTY WELLHEAD TREATMENT SYSTEM INFORMATION

Appendix C contains information specific to individual wellhead treatment systems and is intended to be updated when an existing system is altered or a new system is added to the Site.

Appendix C was last updated on: August 31, 2021.

A total of 11 GAC wellhead treatment systems have been installed on private wells within the Site as of the last update (above).

Appendix C is organized into the following subsections:

- C.1 – GAC Treatment System Locations
- C.2 – GAC Treatment System Components
- C.3 – GAC Treatment System OMM Schedule
- C.4 – GAC Treatment System Flow Diagrams
- C.5 – GAC Treatment System Installation Description

APPENDIX C.1

GAC TREATMENT SYSTEM LOCATIONS

property

GAC treatment location

0 250 500

SCALE IN FEET

N

HYDRO GEO CHEM, INC.

GAC TREATMENT SYSTEM LOCATIONS
HIGHWAY 260 & MAIN ST WQARF SITE
COTTONWOOD, AZ

Approved	Date	Author	Date	File Name	Figure
AJB	09/02/21	MRW	09/02/21	20170180351G	2

APPENDIX C.2

GAC TREATMENT SYSTEM COMPONENTS

Appendix C.2
GAC Treatment System Components
Highway 260 and Main WQARF Site
Cottonwood, Arizona

Carbon Treatment System Address	GAC Treatment Installation Date	Ultima GAC Tank Size	GAC Type and Mesh Size	GAC Amount (cf)	Water Meter (totalizer)	Size/Brand of Sediment Filters	Notes
830 S. Oasis Drive (PW-37)	Initial: 6/1/2018 Replacement: 11/14/2019	10" x 54" with a 35" bed depth	50% CS-HAC 12 x 40 mesh/50% coal anthracite 0.6-0.8 mm mesh	1.5 cf total each tank; 0.75 cf of each GAC type	Neptune T-10 NSF61 5/8" x 3/4" installed 3/2/20	pre 2.5" x 20"; post 2.5" x 9.75" 30 µm and 20 µm polyester pleated filters	Water meter installed during GAC system installation. Water meter found to not be working on 11/15/19. Replaced 3/2/20
150 S. 17th Street (PW-5)	Initial: 6/13/2019 Replacement: 9/21/2019	10" x 54" with a 35" bed depth	50% CS-HAC 12 x 40 mesh/50% coal anthracite 0.6-0.8 mm mesh	1.5 cf total each tank; 0.75 cf of each GAC type	Water meter Neptune T-10 NSF61 5/8" x 3/4" installed 6/13/19.	pre 4.5" x 20" Big Blue; post 4.5" x 9.75" Big Blue; 20 µm polyester pleated filters	
150 S. 17th Street RO Filter	6/28/2019	NA	NA	NA	NA	RO filter - kitchen tap B&R Optima 7	ADEQ-installed RO system at kitchen tap.
117 S. 17th Street (PW-3)	1/24/2020	10" x 54" with a 35" bed depth	50% CS-HAC 12 x 40 mesh/50% coal anthracite 0.6-0.8 mm mesh	1.5 cf total each tank; 0.75 cf of each GAC type	Water meter Neptune T-10 1" installed 4/28/20	pre and post (both) 4.5" x 20" Big Blue (Watts) 20 µm polyester pleated filters	
845 S. Oasis Drive (PW-39)	2/6/2020	10" x 54" with a 35" bed depth	50% CS-HAC 12 x 40 mesh/50% coal anthracite 0.6-0.8 mm mesh	1.5 cf total each tank; 0.75 cf of each GAC type	Water meter Neptune T-10 1" installed 4/28/20	pre and post (both) 4.5" x 20" Big Blue (Watts) 20 µm polyester pleated filters	
2501 E. State Route 89A (TTRV Park) (PW-55)	4/20/2020	21" x 62" with a 35" to 40" bed depth	50% CS-HAC 12 x 40 mesh/50% coal anthracite 0.6-0.8 mm mesh	7 cf total; 3.5 cf each GAC	Water meter WM-NLC-150 1-1/2" (lead free, potable) installed 4/20/20	pre and post (both) 4.5" x 20" Big Blue (Watts) 20 µm polyester pleated filters	
840 S. Oasis Drive (PW-38)	8/13/2020	10" x 54" with a 35" bed depth	50% CS-HAC 12 x 40 mesh/50% coal anthracite 0.6-0.8 mm mesh	1.5 cf total each tank; 0.75 cf of each GAC type	Water meter Neptune T-10 1" installed 8/13/2020	pre and post (both) 4.5" x 20" Big Blue (Watts)	
133 S. 17th Street (PW-4)	3/10/2021	10" x 54" with a 35" bed depth	50% CS-HAC 12 x 40 mesh/50% coal anthracite 0.6-0.8 mm mesh	1.5 cf total each tank; 0.75 cf of each GAC type	Water meter Neptune T-10 1" installed 3/10/2021	pre 4.5" x 20" Big Blue; post 4.5" x 10" Big Blue (Watts)	
2460 E. Cottonwood Street (PW-85)	3/11/2021	10" x 54" with a 35" bed depth	50% CS-HAC 12 x 40 mesh/50% coal anthracite 0.6-0.8 mm mesh	1.5 cf total each tank; 0.75 cf of each GAC type	Water meter Neptune T-10 1" installed 3/11/2021	pre and post (both) 4.5" x 20" Big Blue (Watts)	
2680 E. Cottonwood Street (PW-86)	3/17/2021	10" x 54" with a 35" bed depth	50% CS-HAC 12 x 40 mesh/50% coal anthracite 0.6-0.8 mm mesh	1.5 cf total each tank; 0.75 cf of each GAC type	Water meter Neptune T-10 1" installed 3/17/2021	pre and post (both) 4.5" x 10" Big Blue (Watts)	
2215 E. Aspen Street (PW-16)	3/18/2021	10" x 54" with a 35" bed depth	50% CS-HAC 12 x 40 mesh/50% coal anthracite 0.6-0.8 mm mesh	1.5 cf total each tank; 0.75 cf of each GAC type	Water meter Neptune T-10 1" installed 3/19/2021	pre 4.5" x 20" Big Blue; post 4.5" x 10" Big Blue (Watts)	
1748 Sawmill Road (PW-91)	5/25/2021	10" x 54" with a 35" bed depth	50% CS-HAC 12 x 40 mesh/50% coal anthracite 0.6-0.8 mm mesh	1.5 cf total each tank; 0.75 cf of each GAC type	Water meter Neptune T-10 1" installed 5/25/2021	pre 4.5" x 20" Big Blue; post 4.5" x 10" Big Blue (Watts)	

Notes:

Aquasana GAC tanks installed on 6/1/2018 for 830 Oasis, then switched to Ultima tanks due to pressure issue

Aquasana GAC tanks installed on 6/13/2019 for 150 S. 17th St; kitchen faucet RO system installed on 6/28/19; 1" piping + sediment filters installed on 7/23/19, then switched to Ultima tanks due to pressure issue

cf = cubic feet

mm = millimeter

µm = micrometer

CS-HAC = coconut shell-high activated carbon

GAC = granular activated carbon

NA = not available

PW = private well

TTRV = Turquoise Triangle RV Park

APPENDIX C.3

GAC TREATMENT SYSTEM OMM SCHEDULE

Appendix C.3
GAC Treatment System OMM Schedule
Highway 260 and Main WQARF Site
Cottonwood, Arizona

Carbon Treatment System Address	GAC Midpoint Sampling				GAC Influent Sampling				GAC Effluent Sampling				Revers Osmosis Filter Sampling				Sediment Pre- & Post-Filter Inspection				Collect Pressure Gauge readings				Anticipated GAC Changeout (lead vessel)
	Q1	Q2	Q3	Q4	Q1	Q2	Q3	Q4	Q1	Q2	Q3	Q4	Q1	Q2	Q3	Q4	Q1	Q2	Q3	Q4	Q1	Q2	Q3	Q4	
830 S Oasis Drive (PW-37)	X	X	X	X	X	X	X	X	X	X	X	X					X	X	X	X	X	X	X	X	Every 2 years
150 S 17th Street (PW-5)													X		X										Annually
117 S 17th Street (PW-3)	X	X	X	X	X	X	X	X	X	X	X	X					X	X	X	X	X	X	X	X	Every 2 years
845 S Oasis Drive (PW-39)	X	X	X	X	X	X	X	X	X	X	X	X					X	X	X	X	X	X	X	X	Every 2 years
2501 E. State Route 89A (TTRV Park) (PW-55)	X	X	X	X	X	X	X	X	X	X	X	X					X	X	X	X	X	X	X	X	Annually
840 S Oasis Drive (PW-38)	X	X	X	X	X	X	X	X	X	X	X	X					X	X	X	X	X	X	X	X	Every 2 years
133 S. 17th Street (PW-4)	X	X	X	X	X	X	X	X	X	X	X	X					X	X	X	X	X	X	X	X	Every 2 years
2460 E. Cottonwood Street (PW-85)	X	X	X	X	X	X	X	X	X	X	X	X					X	X	X	X	X	X	X	X	Every 2 years
2680 E. Cottonwood Street (PW-86)	X	X	X	X	X	X	X	X	X	X	X	X					X	X	X	X	X	X	X	X	Every 2 years
2215 E. Aspen Street (PW-16)	X	X	X	X	X	X	X	X	X	X	X	X					X	X	X	X	X	X	X	X	Every 2 years
1748 Sawmill Road (PW-91)	X	X	X	X	X	X	X	X	X	X	X	X					X	X	X	X	X	X	X	X	Every 2 years

Notes:
GAC = granular activated carbon
PW = Private well

APPENDIX C.4

GAC TREATMENT SYSTEM FLOW DIAGRAMS

GAC Treatment System
830 S Oasis Dr

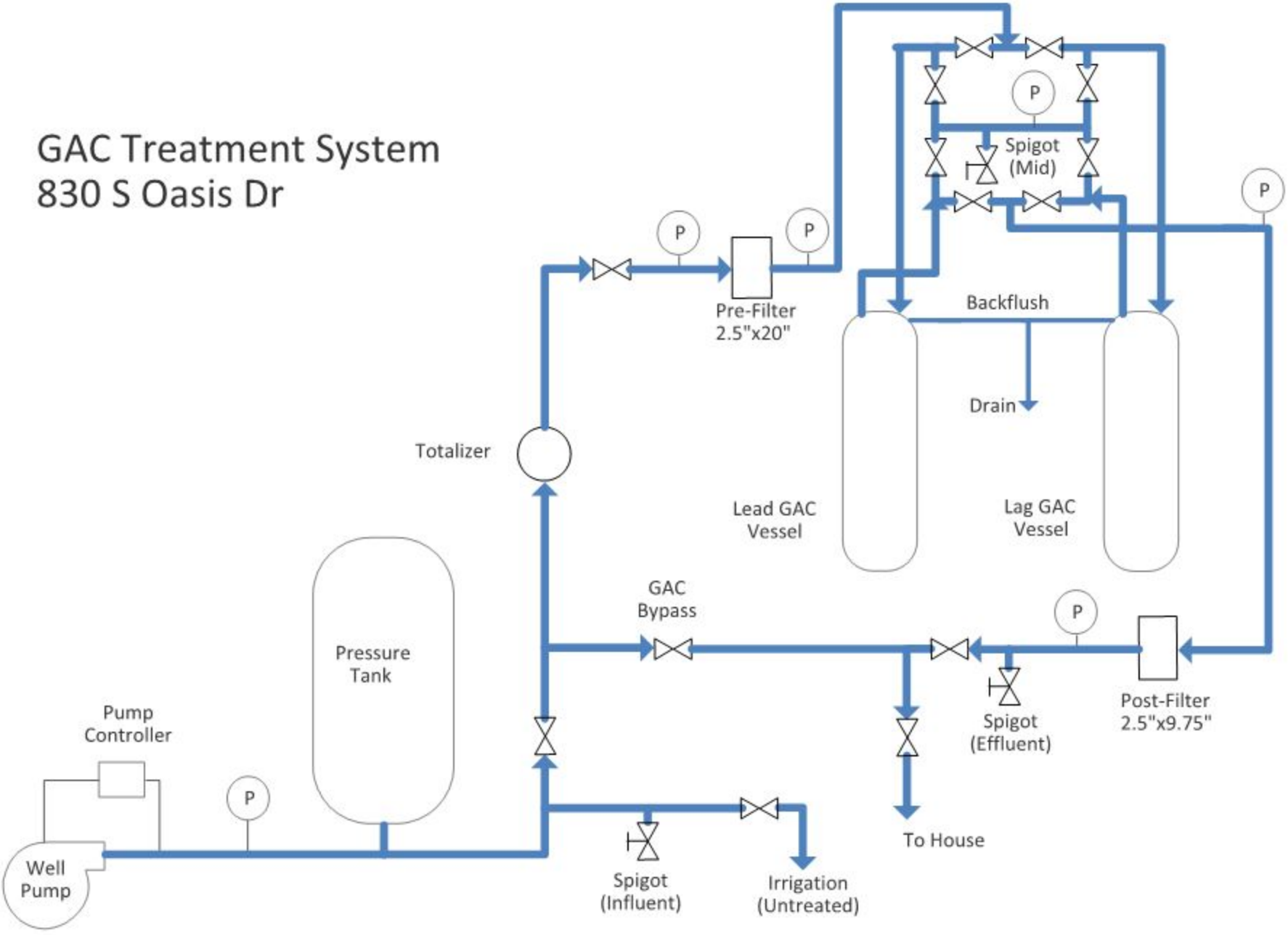

GAC Treatment System
150 S 17th St

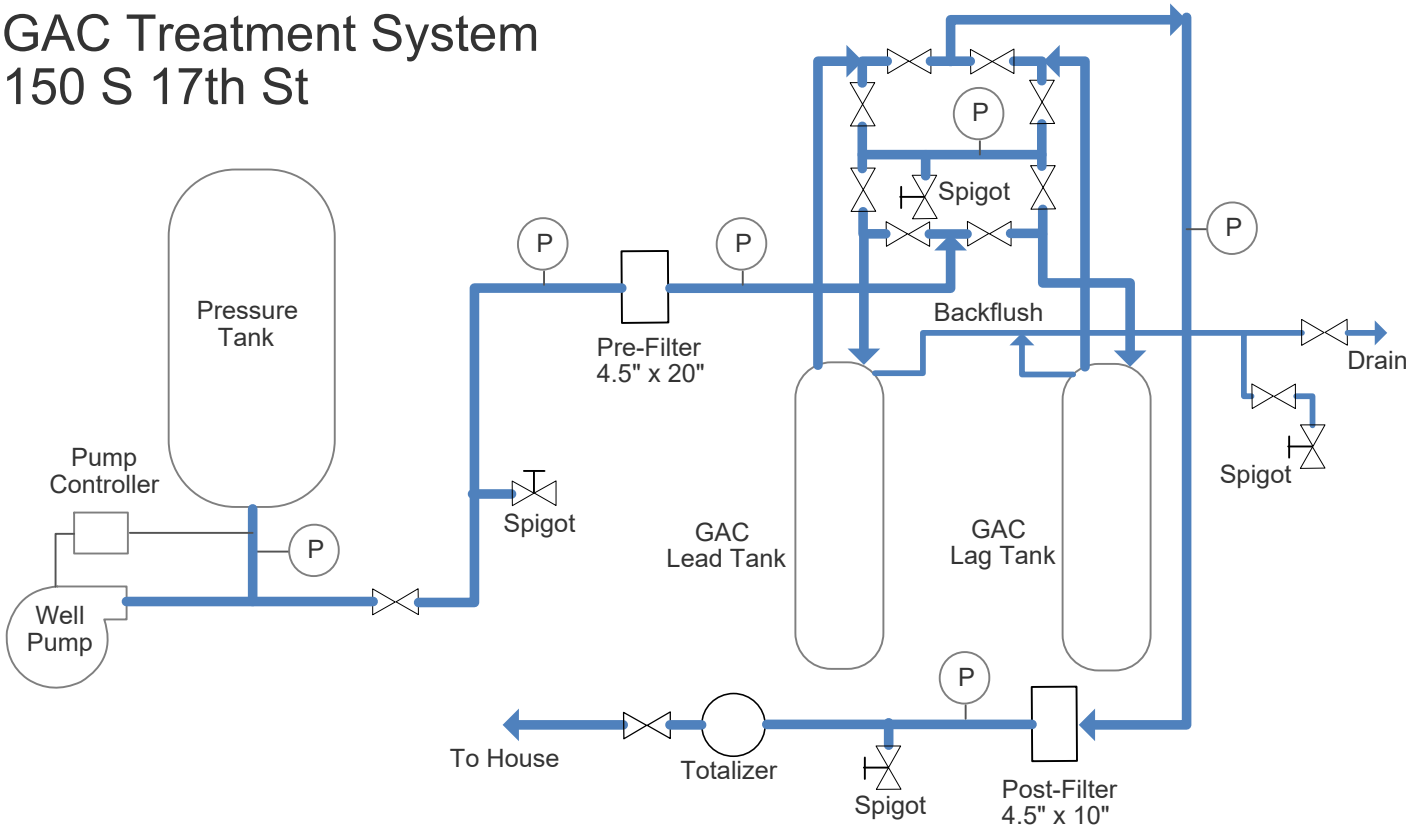

GAC Treatment System
117 S 17th St

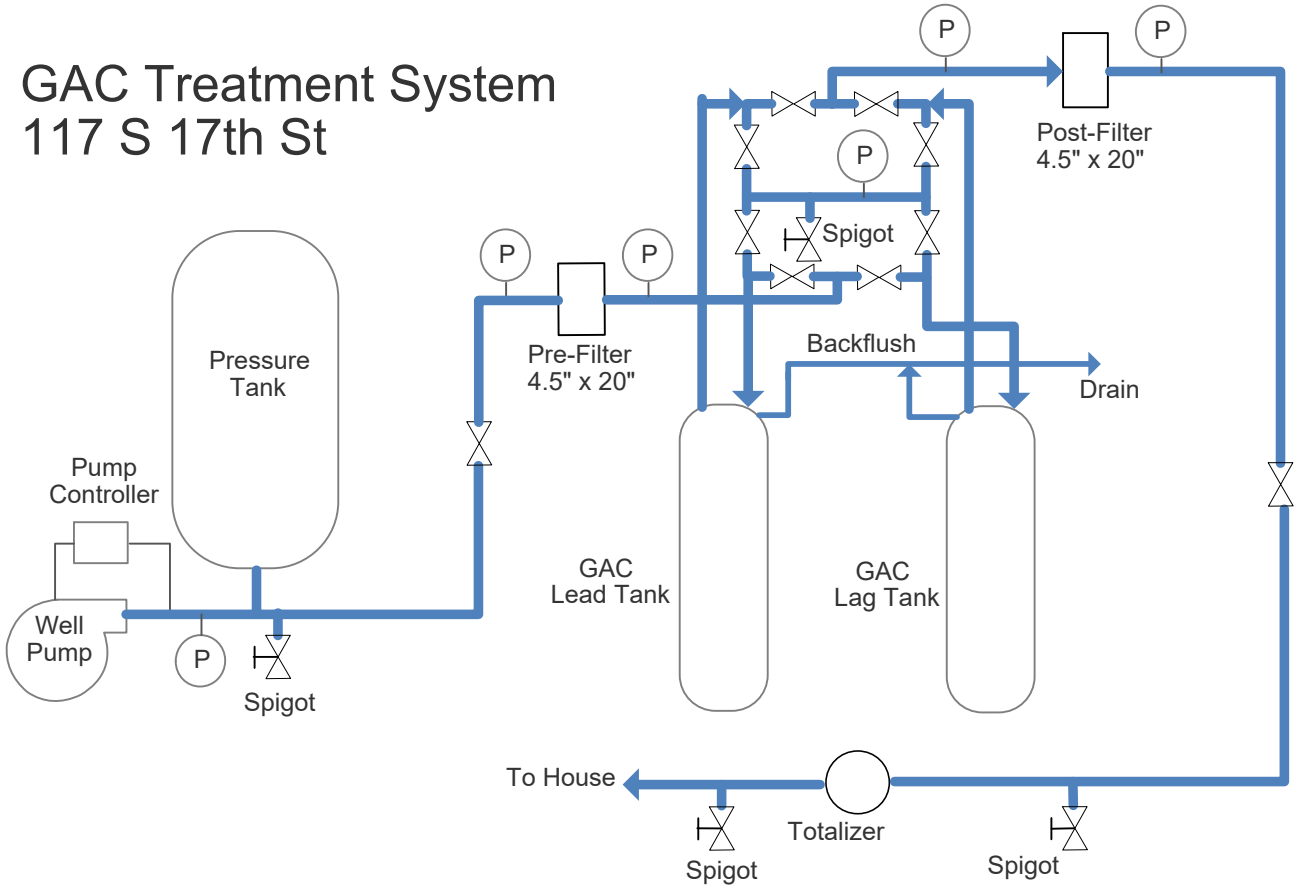

GAC Treatment System
845 S Oasis Dr

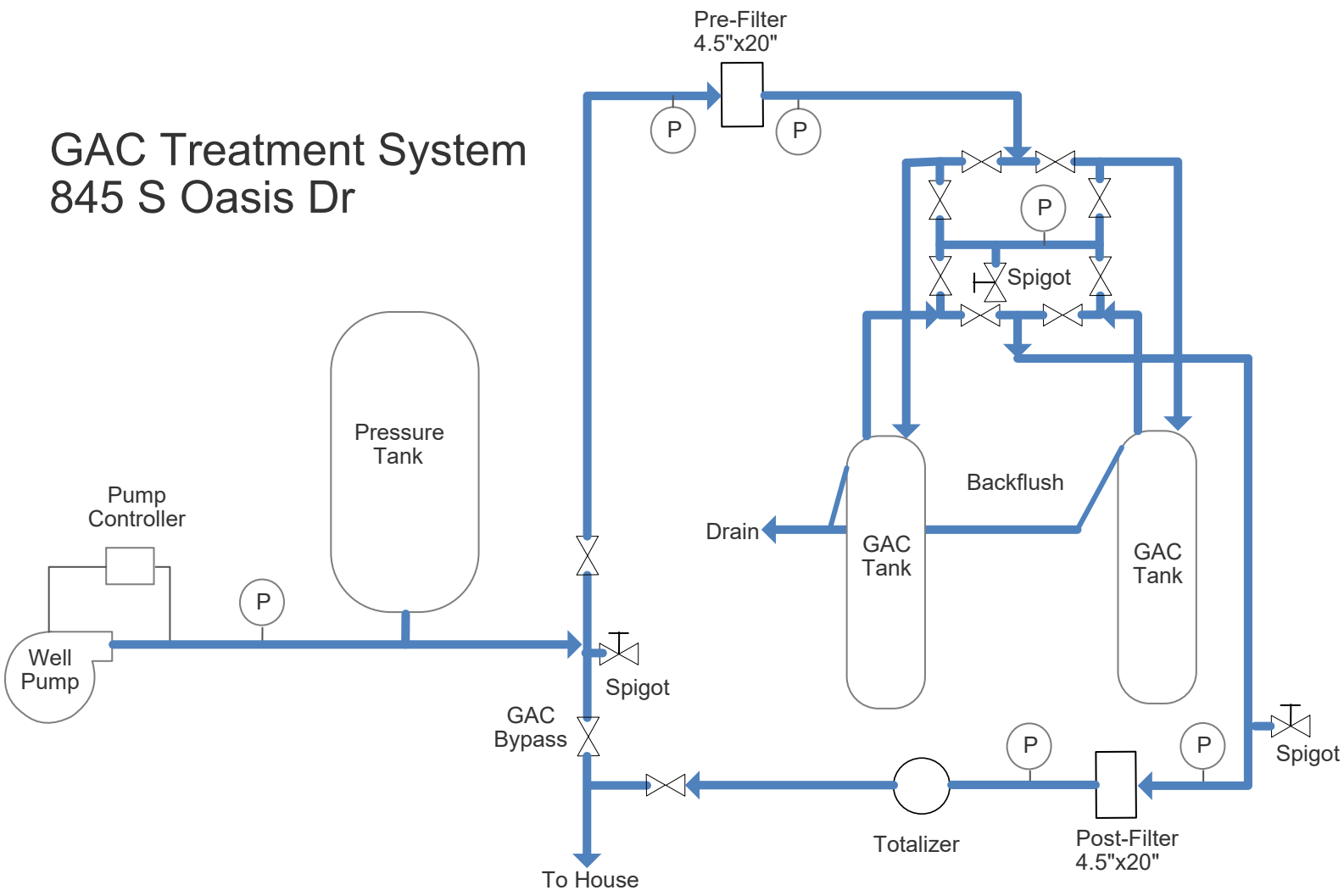

GAC Treatment System
2501 SR89A TTRV

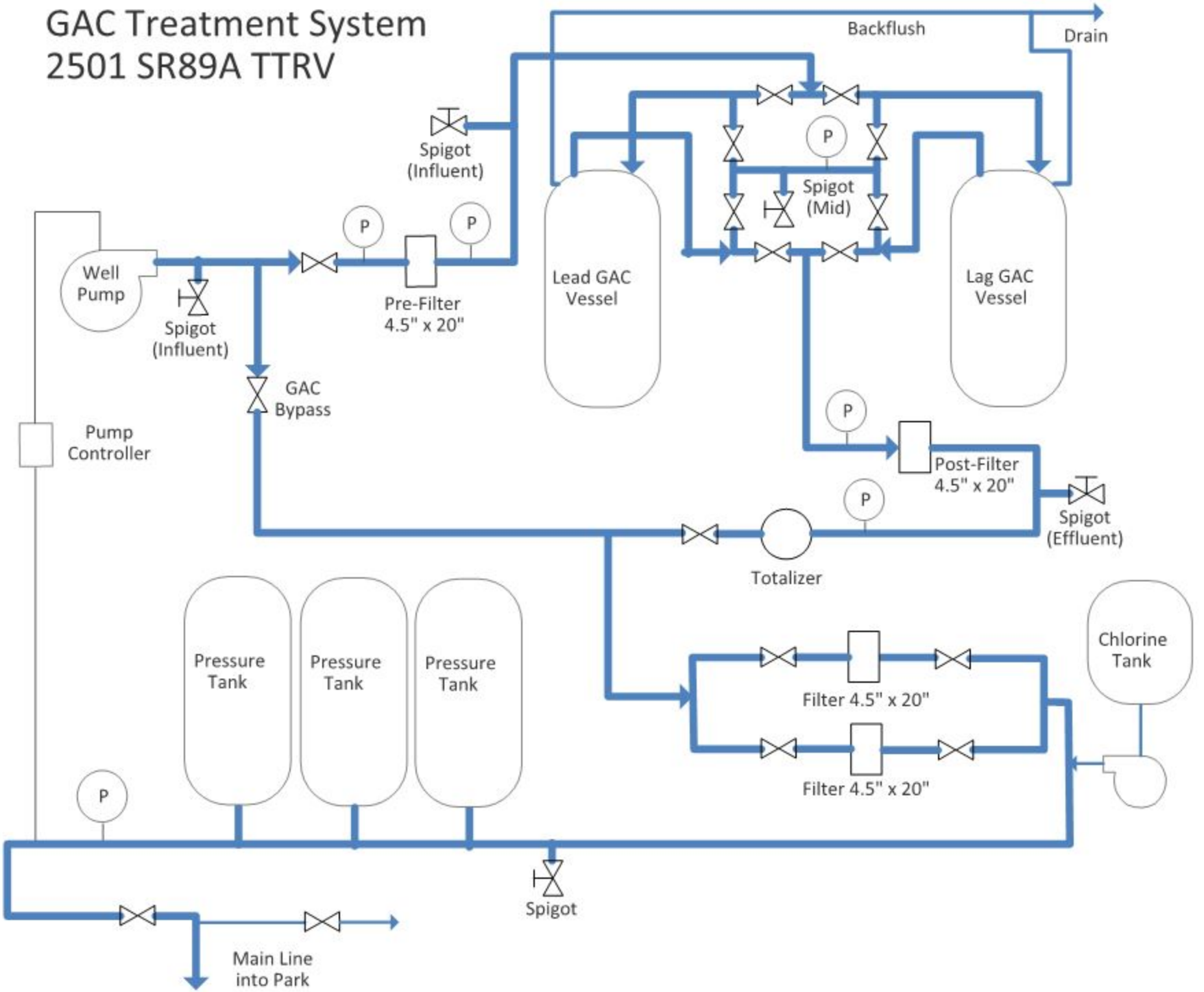

GAC Treatment System
840 S Oasis Dr

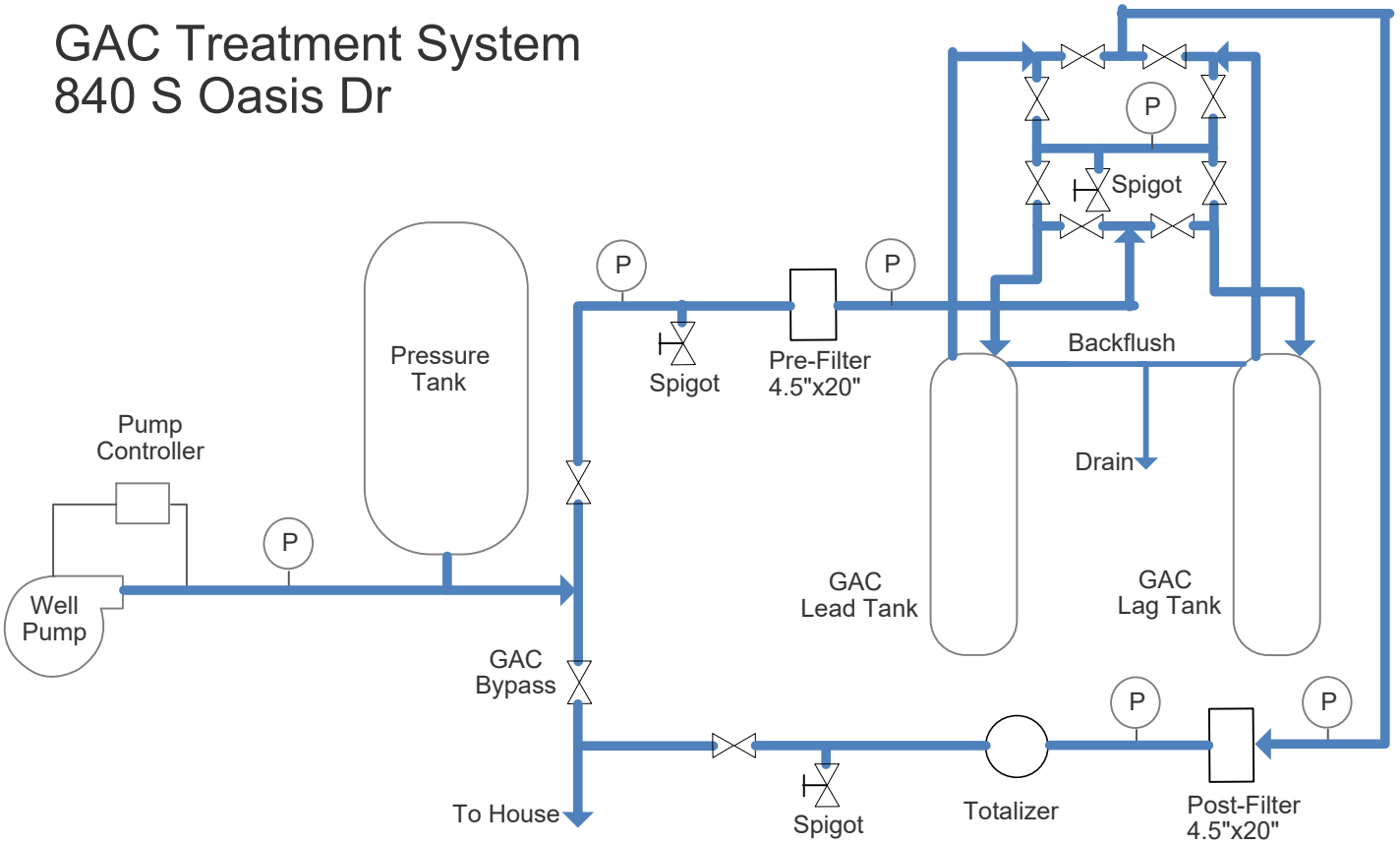

GAC Treatment System
133 S. 17th St

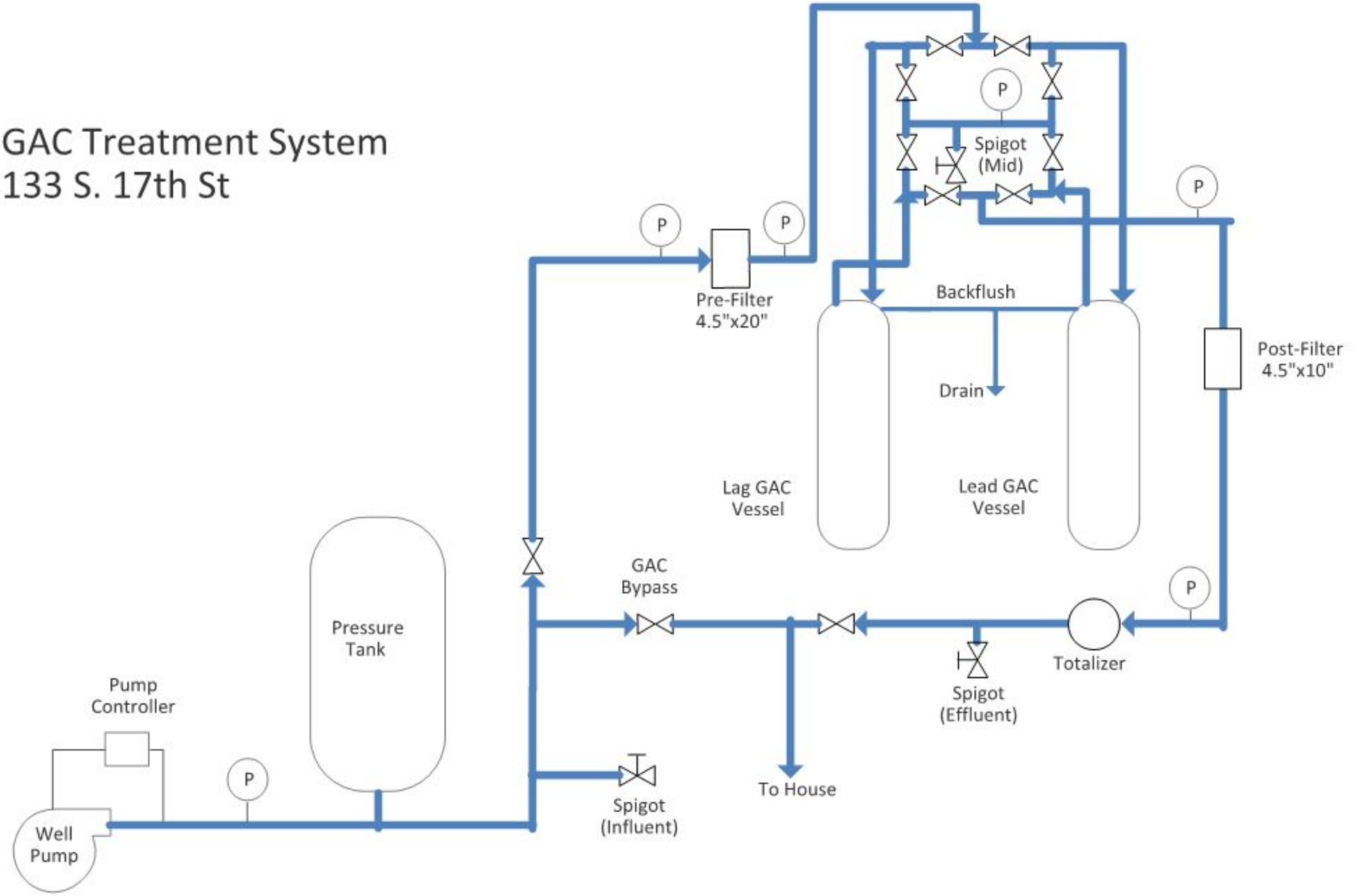

GAC Treatment System
2460 E. Cottonwood St

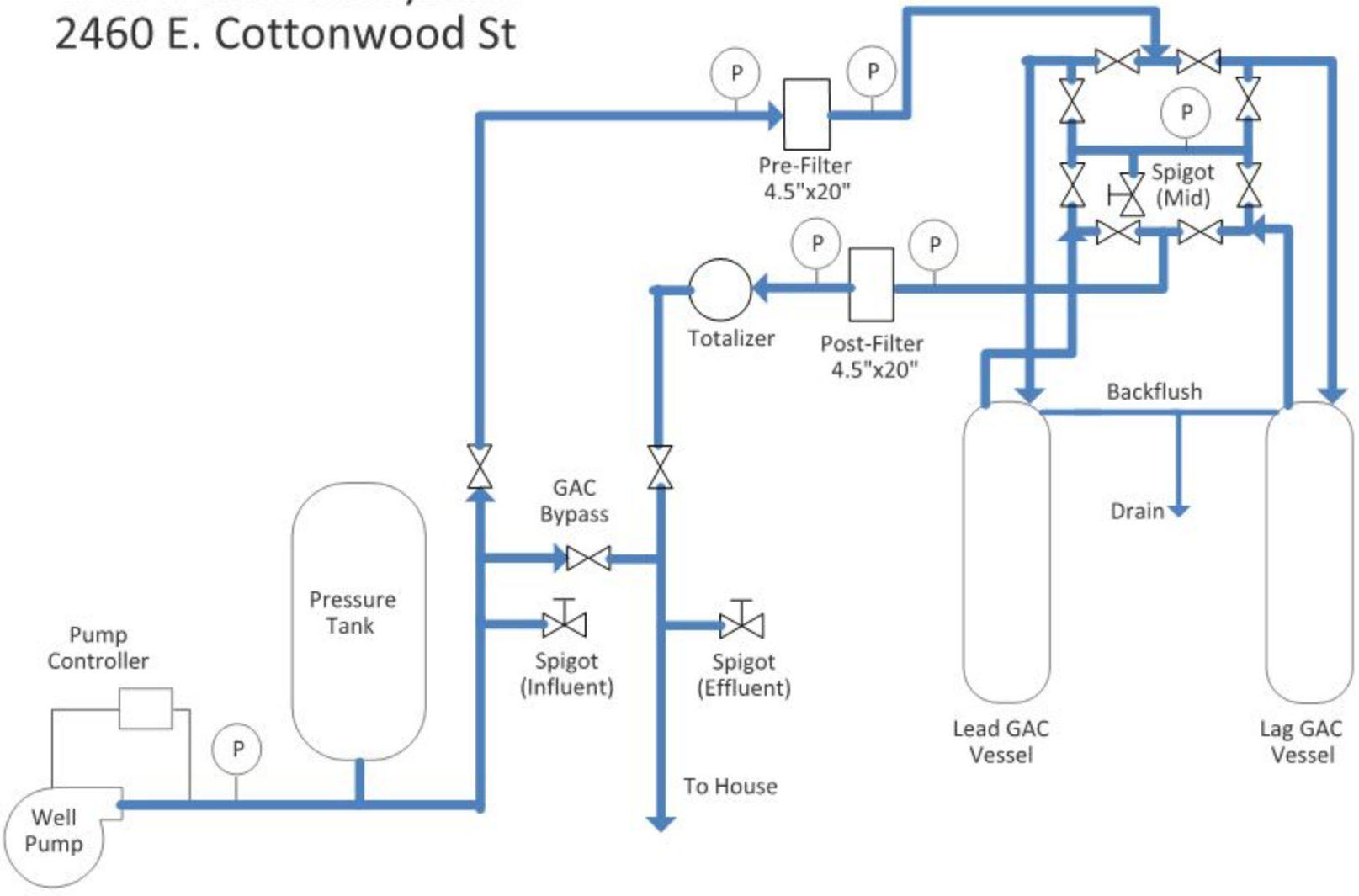

GAC Treatment System
2680 E. Cottonwood St

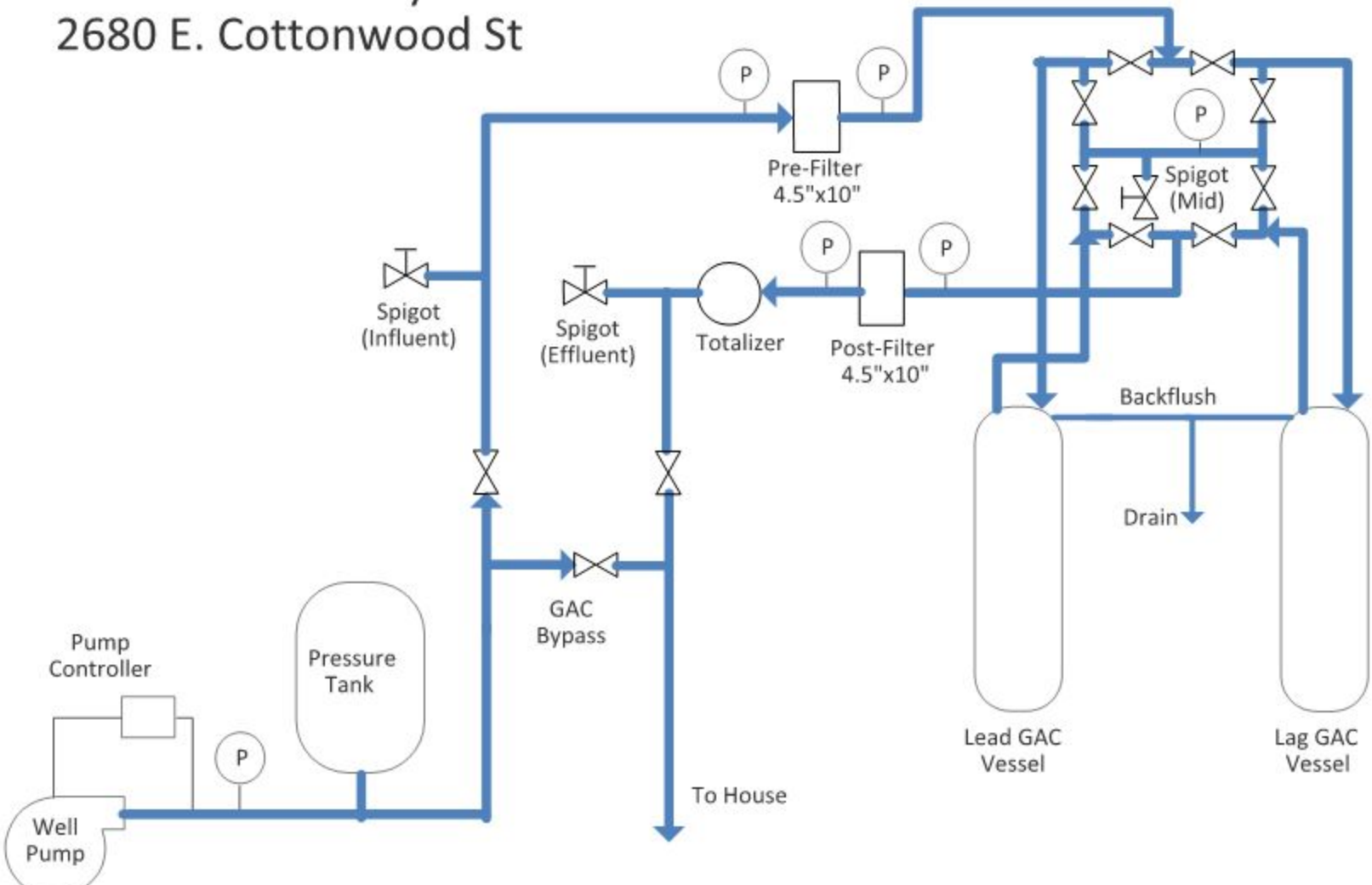

GAC Treatment System
2215 E. Aspen St

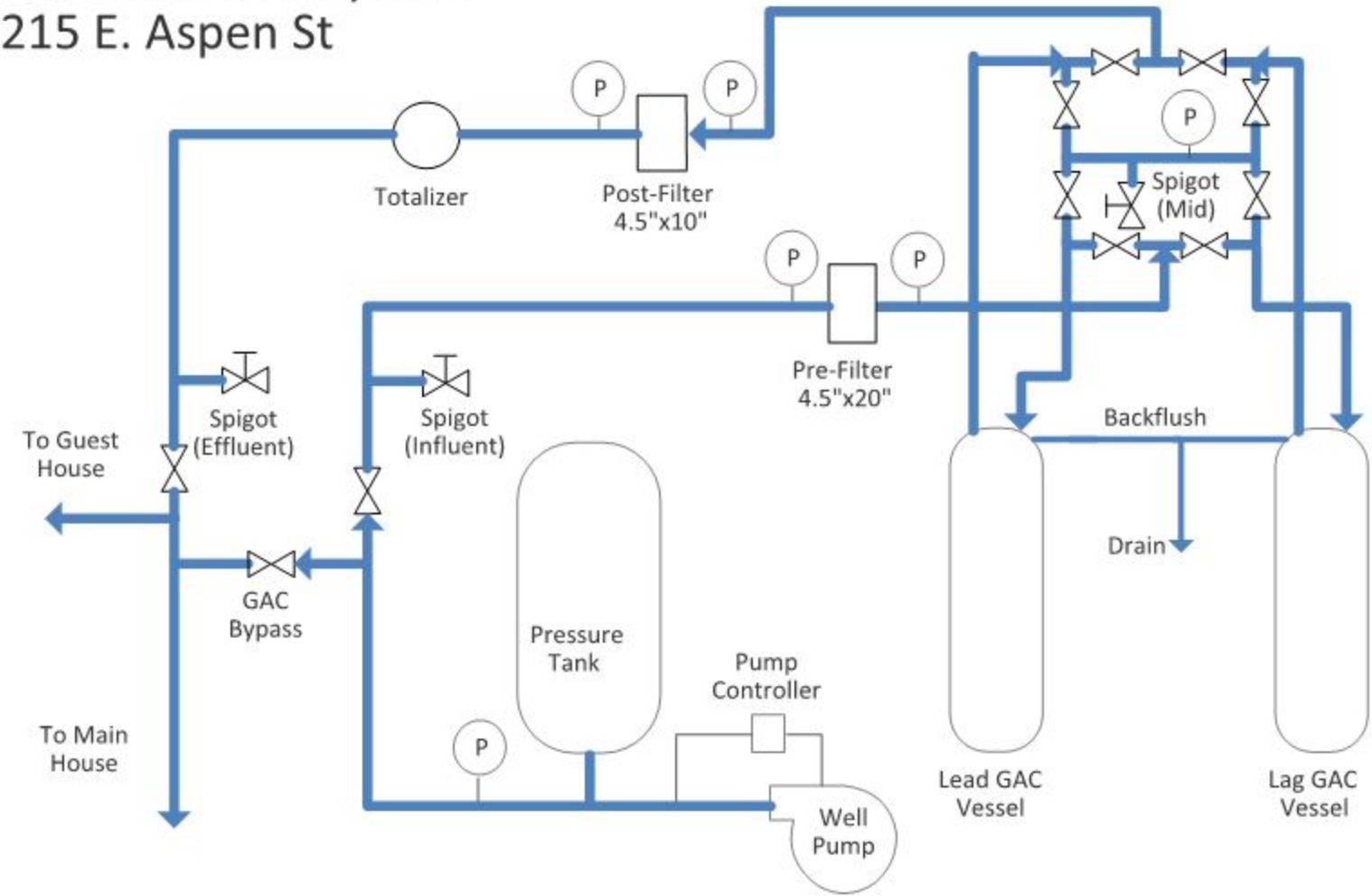

GAC Treatment System
1748 Sawmill Rd

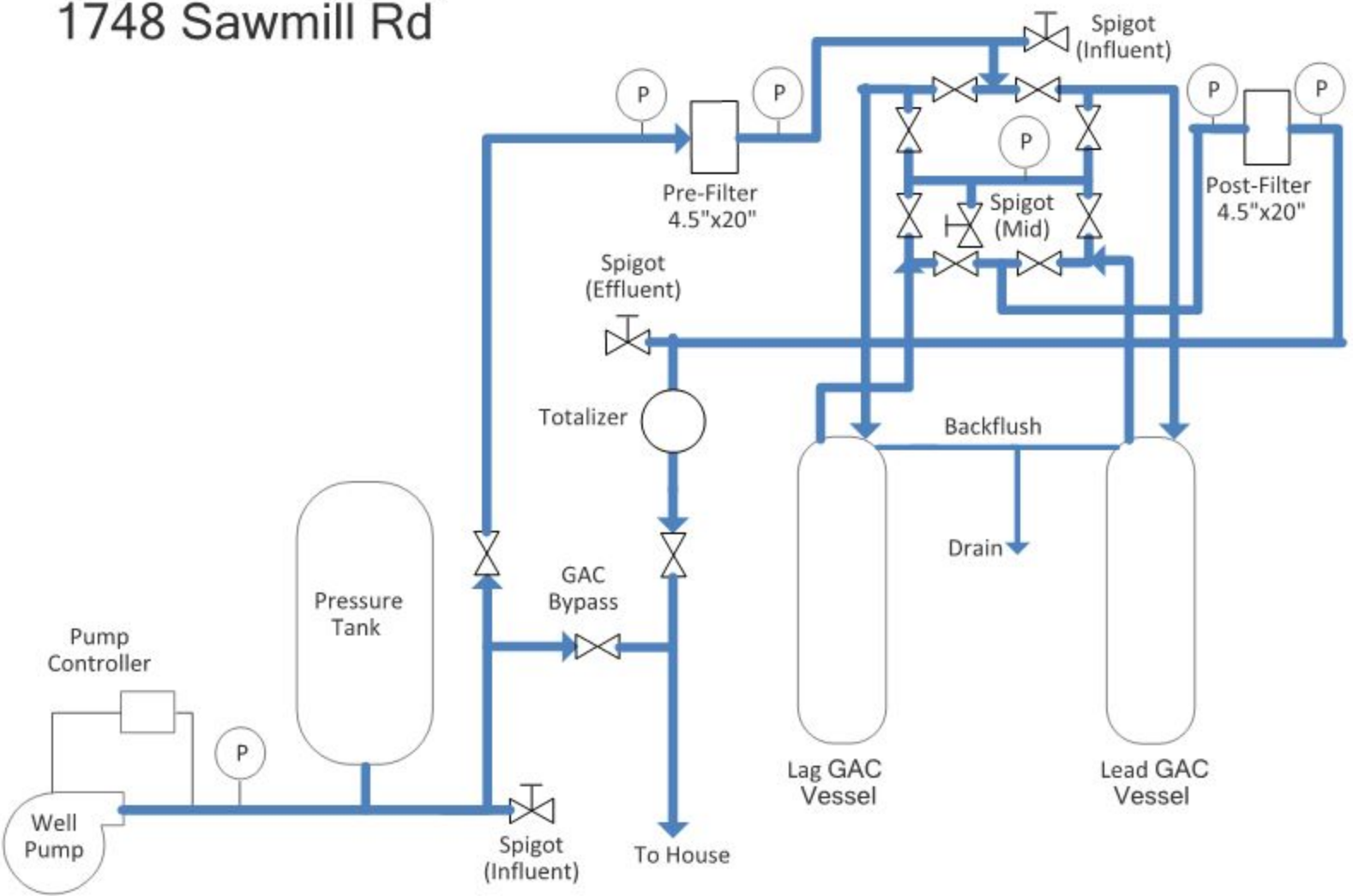

APPENDIX C.5

GAC TREATMENT SYSTEM INSTALLATION DESCRIPTIONS

PW-37 SYSTEM INSTALLATION

A wellhead treatment system was installed at the 830 S. Oasis Drive property within an existing pump house in November 2019, replacing an older treatment system installed in June 2018. The original GAC vessels were replaced with larger-diameter GAC vessels, as the previous system had exhibited significant pressure drops that inhibited adequate flow to the homeowner. The system was retrofitted in July 2020 to include a manifold for switching between lead/lag GAC vessels and pressure gauges between each sediment filter and GAC vessel.

The GAC treatment system design consists of a pressure tank with pump controller; GAC vessels with backflush control valves; backflush plumbing and drainage trench; sediment pre- and post-filters; sampling port spigots before, between, and after the GAC vessels; pressure gauges; and a water meter. The water meter is located after the pressure tank, followed by a 2.5-inch x 20-inch pre-filter and housing. Two 10-inch diameter x 54-inch Ultima vessels each contain 1.5 ft3 of GAC. The GAC vessels have a bed depth of 35 inches, to provide adequate space for bed expansion during backflush operation, and contain equal mixtures of coconut shell (CS-HAC, 12x40 mesh) and coal anthracite (14x30 mesh) GAC. Clack WST1C control valves are part of the GAC vessels for backflush operations; backflush plumbing runs underground and discharges to the sanitary sewer. A sampling port spigot is located between the lead and lag GAC vessels on the manifold. A 2.5-inch x 9.75-inch post-filter and housing are located downstream of the lag GAC vessel, followed by a sampling port spigot. As of June 2021, both the pre and post filters were replaced with 4.5-inch x 20-inch sediment filters. Pressure gauges are installed before and after each sediment filter and GAC vessel so that pressure drop can be monitored. The system has a GAC vessel bypass valve that routes water to the house, and also a bypass for irrigation. Two-way shutoff valves are located after the water meter and after the effluent sampling port spigot, so that the treatment system can be bypassed.

PW-5 SYSTEM INSTALLATION

A wellhead treatment system was installed at 150 S. 17th Street in September 2019, to replace a previous system installed in June 2019, and is contained within the existing pump house. The original system exhibited pressure drop problems, so a larger-diameter system is being used. A GAC vessel switching manifold and pressure gauges between each sediment filter and GAC vessel were added to the system in July 2020.

Two 10-inch diameter x 54-inch Ultima vessels are filled with equal mixtures of coconut shell (CS-HAC, 12x40 mesh) and coal anthracite (14x30 mesh), totaling 1.5 ft^3 of GAC, with GAC bed depths of 35 inches. As of May 2021, the GAC in both vessels was replaced with a coconut shell (AquaCarb 1230AWC). The vessels are installed in the treatment line downstream of the pressure tank. Clack WST1C control valves allow for backflush operations to the sanitary sewer through underground piping. A 4.5-inch x 20-inch pre-filter and housing is located before the lead GAC vessel; a 4.5-inch x10-inch post-filter and housing is located after the lag GAC vessel. A spigot is located in the plumbing just before the pre-filter so that untreated water can be sampled. A spigot is installed in between the GAC vessels, so that the lead GAC effluent can be sampled. A spigot is installed in the line after the post-filter, so that final treated effluent can be sampled, followed by a water meter. Shutoff valves are installed in the lines at locations after the pressure tank and after the water meter, so that flow through the system can be shut off, if needed. A reverse osmosis (RO) filter installed on the kitchen tap just after the GAC system in June 2019 is intended to remove any PCE contamination continuing to desorb from the water pipes between the GAC treatment system and the house at this location.

In addition to regular OMM sampling, samples should be collected from an untreated house tap and from the RO system at the kitchen tap at 150 S. 17th St until contaminants are no longer reported at the untreated house tap at concentrations greater than at the GAC effluent. The RO filter is not anticipated to need replacement, as contaminants at the untreated house tap have been at concentrations below AWQS.

PW-3 SYSTEM INSTALLATION

A wellhead treatment system was installed at 117 S. 17th Street in January 2020. During the system installation a new concrete pad, metal shed, electrical outlet, and pressure tank were installed. A GAC vessel switching manifold and pressure gauges between each sediment filter and GAC vessel were added to the system in July 2020. The pre-treatment water supply system consisted of a well and pump with a pressure tank on a small concrete slab in the yard.

After the January 2020 system installation, a metal shed sits on a concrete pad for housing the new treatment system and an electrical outlet from the house electrical panel for the backflush control valves. A new pressure tank is plumbed directly after the well pump. A sampling port spigot is installed near the pressure tank. A 4.5-inch x 20-inch pre-filter and housing are installed downstream of the pressure tank. Two 10-inch diameter x 54-inch Ultima vessels with Clack control valves are installed in series with a sampling port spigot in between. The vessels contain equal amounts of CS-HAC and anthracite GAC, totaling 1.5 ft3, and a bed height of 35 inches. Backflush plumbing runs underground and discharges to the sanitary sewer. A 4.5-inch x 20-inch post-filter and housing are installed following the GAC lag vessel. A sampling port spigot is installed following the post-filter. A water meter is installed after the sampling spigot. An additional spigot is plumbed in before the line goes underground to the house, for use by the well owner for irrigation. Shutoff valves are installed before the pre-filter and after the post-filter.

PW-39 SYSTEM INSTALLATION

A wellhead treatment system was installed in the garage of 845 S. Oasis Drive in February 2020. A GAC vessel switching manifold and pressure gauges between each sediment filter and GAC vessel were added to the system in July 2020.

Two 10-inch diameter x 54-inch Ultima vessels with Clack control valves are installed in series with a sampling port spigot in between. The vessels contain equal amounts of CS-HAC and anthracite GAC, totaling 1.5 ft3, and a bed height of 35 inches. A sampling port spigot is installed downstream of the pressure tank. A 4.5-inch x 20-inch pre-filter and housing are installed before the lead GAC vessel. Sampling port spigots are installed between the GAC vessels and after the lag GAC vessel. A 4.5-inch x 20-inch post-filter and housing are installed following the effluent sampling port spigot, and a water meter is installed following the post-filter. Shutoff valves are installed before the pre-filter and after the water meter. The existing shutoff valve serves as the GAC treatment system bypass valve. Backflush plumbing is installed and directed to a sanitary drain that exists in the garage.

PW-55 SYSTEM INSTALLATION

A wellhead treatment system was installed at 2501 E. State Route 89A (Turquoise Triangle RV Park) in April 2020. During the system installation a new concrete pad and metal shed were installed next to the existing pump house for use by the wellhead treatment system. A GAC vessel switching manifold and pressure gauges between each sediment filter and GAC vessel were added to the system in July 2020

The existing pump house contains a well pump, controller, two pre-filters in parallel configuration, a chlorinator, and three pressure tanks. An adjacent metal shed sits on a concrete pad next to the existing pump house for housing the new GAC treatment system. A water line from the well pump extends through the walls of the pump house and metal shed, where the two 21-inch diameter x 62-inch Ultima vessels with Clack control valves are installed. Each vessel has 7 ft3 of an equal mix of the two GAC types, filled to a bed height of 35 to 40 inches. A 4.5-inch x 20-inch pre-filter and housing are installed before a sampling port spigot in the line entering the lead GAC vessel. A sampling port spigot is installed between the GAC vessels. A 4.5-inch x 20-inch post-filter and housing are installed following the lag GAC vessel. A sampling port spigot is located after the post-filter and a water meter is located in the line before it's directed back into the pump house. Backflush plumbing runs underground and discharges to the sanitary sewer. Shutoff valves are installed on the lines going to and from the GAC system, on the inside of the pump house. Additionally, the GAC system influent and effluent lines are connected with a shutoff valve in between so the system can be bypassed.. Water leaving the GAC vessels at the TTRV Park gets chlorinated before filling the pressure tanks or serving the residents.

PW-38 SYSTEM INSTALLATION

A wellhead treatment system was installed at 840 S. Oasis Drive in August 2020. The system was installed in a small room in the residential garage and is plumbed into the existing supply line into the house.

Two 10-inch diameter x 54-inch Ultima vessels with Clack control valves are installed in series with a sampling port spigot in between. The vessels contain equal amounts of CS-HAC and anthracite GAC, totaling 1.5 ft3, and a bed height of 35 inches. The wellhead and pressure tank are located in a separate garage on the property. A sampling port spigot is installed in the line entering the small room that houses the GAC system. A pressure gauge is installed in this line and is followed by a 4.5-inch x 20-inch pre-filter and housing, with another pressure gauge following the pre-filter prior to a manifold used for switching flow between the GAC vessels. Water enters from the bottom of the manifold; each side of the manifold is plumbed into the inlet and outlet of the GAC vessels and water exits the manifold from the top. A pressure gauge and sampling port spigot are installed in the manifold between the GAC vessels and a pressure gauge is installed at the outlet of the manifold. A 4.5-inch x 20-inch post-filter and housing are installed following the pressure gauge with a final pressure gauge installed in the line after the post-filter, a water meter following the final pressure gauge and a sampling port spigot following the water meter. Pressure gauges, as described above, are installed before and after each sediment filter and GAC vessel, totaling five gauges. Shutoff valves are installed before and after the influent and effluent sampling port spigots, respectively and another shutoff valve allows the treatment system to be bypassed. Backflush plumbing is installed and directed to a sanitary drain within the room.

PW-4 SYSTEM INSTALLATION

A wellhead treatment system was installed at 133 S. 17th Street in March 2021. The system was installed in and next to the property owner's pump house (south side of the home) that houses the wellhead, pressure tank and supply line to the house. A Rubbermaid plastic toolshed was installed next to the pump house to contain the GAC vessels due to limited space in the pump house. A concrete pad was poured next to the pump house and the base of the plastic shed was secured to the pad with anchor bolts.

A GAC treatment system consisting of two B&R Industries 10-inch diameter by 54-inch Ultima vessels containing 50% coconut shell and 50% coal anthracite GAC with a 4.5-inch x 20-inch pre-GAC and a 4.5-inch x 10-inch post-GAC sediment filter was installed at the 133 S. 17th Street pump house on March 10, 2021. The sediment filters were mounted to studs in the pump house upstream and downstream of the GAC vessels. Three sampling ports, five pressure gauges, a totalizing flow meter and a lead/lag GAC vessel switching manifold were installed to perform sampling and O&M. A GAC system bypass line controlled by shutoff valves was also installed. The back-flush line was directed through the lower side of the plastic shed where a garden hose fitting was installed on the outer wall. The GAC system piping was insulated with pipe foam insulation wrapped in PVC tape.

PW-85 SYSTEM INSTALLATION

A wellhead treatment system was installed at 2460 E. Cottonwood Street in March 2021. The treatment system was installed in the property owner's pump house (north of the home) that houses the wellhead and pressure tank; the supply line into the house is buried next to the west side of the pump house, running south to the home.

A GAC treatment system consisting of two B&R Industries 10-inch diameter by 54-inch Ultima vessels containing 50% coconut shell and 50% coal anthracite GAC with 4.5-inch x 20-inch pre-GAC and post-GAC sediment filters was installed at the 2460 E. Cottonwood Street pump house starting on March 11, 2021. The sediment filters were mounted to the walls in the pump house upstream and downstream of the GAC vessels. Three sampling ports, five pressure gauges, a totalizing flow meter and a lead/lag GAC vessel switching manifold were installed to perform sampling and O&M. A GAC system bypass line controlled by shutoff valves was also installed. The original supply line from the wellhead to the house was buried along the west side of the pump house. The pressure tank was housed in the pump house and connected to the buried supply line at a single point. The buried supply line was excavated and replumbed to the GAC system effluent line. The replumbed lines are above ground and allowing water to pass through or bypass the treatment system via accessible shutoff valves. The back-flush line was installed within a trench running south from the west side of the pump house and past the west side of the home to a sanitary drain near the front of the house.

PW-86 SYSTEM INSTALLATION

A wellhead treatment system was installed at 2680 E. Cottonwood Street in March 2021. The treatment system was installed in the property owner's pump house, a small room attached to the east side of the house. The pump house houses the wellhead, above-grade well pump, 42-gallon pressure tank and supply line to the house.

A GAC treatment system consisting of two B&R Industries 10-inch diameter by 54-inch Ultima vessels containing 50% coconut shell and 50% coal anthracite GAC with 4.5-inch x 10-inch pre-GAC and post-GAC sediment filters was installed at the 2680 E. Cottonwood Street pump house on March 17, 2021. Shelving in the room had to be removed to make space for the install. Due to limited space, the smaller 4.5-inch x 10-inch sediment filters were used for both pre- and post-GAC filtration. Three sampling ports, five pressure gauges, a totalizing flow meter and a lead/lag GAC vessel switching manifold were installed to perform sampling and O&M. A GAC system bypass line controlled by shutoff valves was also installed. The back-flush line was installed inside the pump house with a garden hose fitting on the end and hangs between the GAC vessels.

PW-16 SYSTEM INSTALLATION

A wellhead treatment system was installed at 2215 E. Aspen Street in March 2021. The treatment system was installed in the property owner's guest house (approximately 250' south of the paved Aspen St., immediately north of the tennis courts), which houses the pressure tank. The wellhead is located between the guest house and main house on the north side of the eastern edge of the tennis court. The guest house and main house shared a single line that moved water to both houses in parallel prior to system installation. During installation, the shared supply line was replumbed such that water was directed from the well through the treatment system prior to entering separate, parallel supply lines to the guest and main houses. The original, buried supply line to the main house is still used, but is now plumbed into the effluent of the treatment system. The connection between the original plumbing and new plumbing is buried adjacent to the wellhead.

A GAC treatment system consisting of two B&R Industries 10-inch diameter by 54-inch Ultima vessels containing 50% coconut shell and 50% coal anthracite GAC with a 4.5-inch x 20-inch pre-GAC and a 4.5-inch x 10-inch post-GAC sediment filter was installed at the 2215 E. Aspen Street guest house on March 18, 2021. The sediment filters were mounted on the guest house walls upstream and downstream of the GAC vessels. Three sampling ports, five pressure gauges, a totalizing flow meter and a lead/lag GAC vessel switching manifold were installed to perform sampling and O&M. A GAC system bypass line controlled by shutoff valves was also installed. The back-flush line was routed through the south wall of the guest house to a newly installed garden hose fitting mounted on the outer wall.

PW-91 SYSTEM INSTALLATION

A wellhead treatment system was installed at 1748 Sawmill Road in May 2021. The treatment system was installed in the property owner's barn (northeast of the main house) that houses the pressure tank. The wellhead is located between the barn and main house. A platform and mounting system were installed to support the GAC vessels and plumbing due to a sloped foundation and lack of infrastructure for support. The sediment filters, manifold and totalizer were mounted to the support system, and the GAC vessels were places on a leveled platform to counter the sloped floor of the barn.

A GAC treatment system consisting of two B&R Industries 10-inch diameter by 54-inch Ultima vessels containing 50% coconut shell and 50% coal anthracite GAC with 4.5-inch x 20-inch pre-GAC and post-GAC sediment filters was installed in the 1748 Sawmill Road barn and completed on May 25, 2021. Three sampling ports, five pressure gauges, a totalizing flow meter and a lead/lag GAC vessel switching manifold were installed to perform sampling and O&M. A GAC system bypass line controlled by shutoff valves was also installed. The back-flush line was routed through the south wall of the guest house to a newly installed garden hose fitting. All of the GAC system piping was insulated with pipe insulation foam and wrapped in PVC wrap tape.