ARCADIS Design & Consultancy for natural and built assets

Universal Propulsion Company, Inc.

GROUNDWATER ALTERNATIVE GW-2 TREATMENT PLANT DESIGN BASIS

Former UPCO Facility

Phoenix, Arizona

March 2018

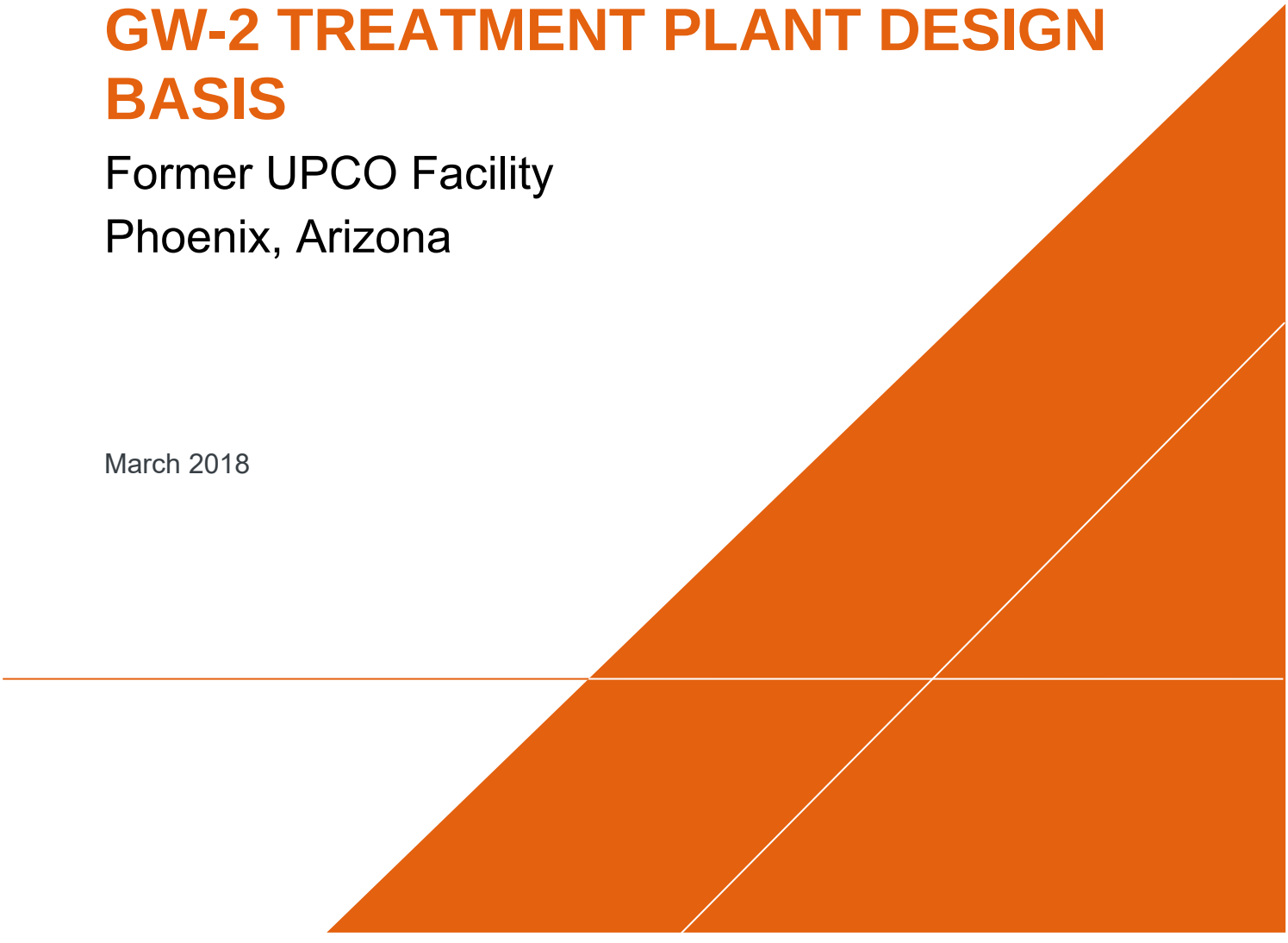

GROUNDWATER ALTERNATIVE GW-2 TREATMENT PLANT DESIGN BASIS

Former UPCO Facility
Phoenix, Arizona

Michael P. Nesky, P.E.
Principal Environmental Engineer

Justin Provolt, P.E.
Project Chemical Engineer

Scott B. Murphy, P.E. – WI
Technical Expert

Prepared for:
Universal Propulsion Company, Inc.

Prepared by:
Arcadis U.S., Inc.
410 N. 44th Street
Suite 1000
Phoenix
Arizona 85008
Tel 602 438 0883
Fax 602 438 0102

Our Ref.:
03994018.0025

Date:
March 2018

This document is intended only for the use of the individual or entity for which it was prepared and may contain information that is privileged, confidential and exempt from disclosure under applicable law. Any dissemination, distribution or copying of this document is strictly prohibited.

CONTENTS

Acronyms and Abbreviations iv

1 Introduction 1-1

2 General Design Considerations 2-1

3 Treatment Goals 3-1

4 Groundwater Model 4-1

5 Bioreactor Pilot Test 5-1

6 Groundwater Conveyance 6-1

6.1 Remediation Well Design 6-1

6.2 Groundwater Extraction and Conveyance 6-2

7 Groundwater Treatment Plant 7-1

7.1 Overview 7-1

7.2 Liquid-Phase Granular-Activated Carbon 7-1

7.3 Bioreactor Treatment 7-4

7.3.1 System Design 7-4

7.3.2 Bioreactor Nutrient Addition and pH Control 7-7

7.3.3 Bioreactor Media and Bed Height Control 7-8

7.4 Multi-Media Filtration 7-9

7.5 Ion Exchange 7-11

7.6 Treated Water Injection 7-13

8 Ancillary Processes 8-1

8.1 System Pumps 8-1

8.2 Backwash and Solids Management 8-4

8.3 Flow Equalization 8-5

8.4 Compressed Air 8-6

8.5 Instrumentation and Control 8-7

8.6 Heating, Ventilation, and Air Conditioning 8-7

8.7 Fire Protection 8-8

8.8 Grounding 8-8

8.9 Cathodic Protection 8-9

8.10 Secondary Containment 8-9
8.10.1 Building Foundation 8-10
8.10.2 Chemical Storage 8-10
8.10.3 Floor Sumps 8-10
8.11 Hazardous Area Classification Evaluation 8-11
8.12 Eyewash and Safety Shower 8-11
9 References 9-1

TABLES

Table 1. Site Groundwater Cleanup Standards 3-1
Table 2. Well Selection for Modeling Groundwater Alternative GW-2 4-1
Table 3. Remediation Well Screen Intervals and Depth to Groundwater 6-2
Table 4. Extraction Well Flow Rates 6-3
Table 5. Influent Water Quality – LGAC Design 7-2
Table 6. Liquid-Phase Granular-Activated Carbon Design Parameters 7-3
Table 7. Bioreactor Projected Influent and Effluent Water Quality 7-4
Table 8. Bioreactor Design Parameters 7-6
Table 9. Bioreactor Projected Influent Metals Chemistry 7-7
Table 10. Bioreactor pH Adjustment and Nutrient Addition Design Parameters 7-8
Table 11. Multi-Media Filtration Design Parameters 7-10
Table 12. Ion Exchange Influent and Projected Effluent Water Quality 7-12
Table 13. Ion Exchange Design Parameters 7-13
Table 14. Injection Well Flow Rates 7-14
Table 15. Injection Well Drop Tube and Check Valve Design Parameters 7-14
Table 16. Pump Sizing Design Parameters 8-2
Table 17. Backwash Conditioning Tank Sizing and Sludge Volume 8-4
Table 18. Flow Equalization Design Parameters 8-6
Table 19. Compressed Air Design Parameters 8-6
Table 20. Secondary Containment Design Parameters 8-9

FIGURES

Figure 1	UPCO Site Plan
Figure 2	Overall Project Site Plan

APPENDICES (ON CD)

Appendix A	Hydraulic Calculations and System Curve Analysis
Appendix B	HDPE Specifications and Pressure Testing Procedures
Appendix C	MAG 2018 Specification 601
Appendix D	MAG 2018 Specifications 728
Appendix E	Bill of Materials
Appendix F	Equipment Cut Sheets
Appendix G	Controls Interlock Table
Appendix H	HVAC Specifications
Appendix I	Structural Specifications

DESIGN DRAWINGS

G-1	Cover Page
C-1 to C-10	Civil Drawings
M-1 to M-9	Mechanical Drawings
H-1 to H-7	Heating, Ventilation, and Air Conditioning (HVAC) Drawings
PFD	Process Flow Diagram
P-1 to P-11	Piping and Instrumentation Diagrams
E-1 to E-10	Electrical Drawings
S-1 to S-8	Structural Drawings

ACRONYMS AND ABBREVIATIONS

ADEQ	Arizona Department of Environmental Quality
Alternative GW-2	Groundwater Alternative GW-2
AOP	advanced oxidation process
Arcadis	Arcadis U.S., Inc.
bgs	below ground surface
btoc	below top of casing
btu	British thermal unit
$CaCO_3$	calcium carbonate
CAO	corrective action objective
cfm	cubic feet per minute
CMI Work Plan	Corrective Measures Implementation Work Plan
CMS Report	Corrective Measures Study Report
COC	constituent of concern
design basis	Groundwater Alternative GW-2 Treatment Plant Design Basis
EBCT	empty bed contact time
Envirogen	Technologies, Inc.
FBR	fluidized bed bioreactor
ft^2	square foot
ft^3	cubic foot
GAC	granular-activated carbon
gpd	gallons per day
gpm	gallons per minute
GWTP	Groundwater Treatment Plant
HCO_3	bicarbonate
HDPE	high-density polyethylene
HMI	Human-Machine Interface
HRT	hydraulic residence time
Hz	hertz
IEX	ion exchange

in	inch
lbs	pounds
LGAC	liquid-phase granular-activated carbon
mg/L	milligrams per liter
ND	non-detect
NEC	National Electrical Code
NFPA	National Fire Protection Association
O&M	operation and maintenance
ORP	oxidation-reduction potential
PEMB	pre-engineered metal building
PFD	process flow diagram
PLC	programmable logic controller
psf	pounds per square foot
psi	pounds per square inch
PVC	polyvinyl chloride
SCADA	supervisory control and data acquisition
Site	former Universal Propulsion Company, Inc. facility at 25401 North Central Avenue in Phoenix, Arizona
TBD	to be determined
TOC	total organic carbon
TSS	total suspended solids
UPCO	Universal Propulsion Company, Inc.
V	volt
VFD	variable frequency drive
°F	degrees Fahrenheit
µg/L	micrograms per liter

1 INTRODUCTION

Arcadis U.S., Inc. (Arcadis) has prepared this Groundwater Alternative GW-2 Treatment Plant Design Basis (design basis) for a proposed Groundwater Treatment Plant (GWTP) to be located at the former Universal Propulsion Company, Inc. (UPCO) facility at 25401 North Central Avenue in Phoenix, Arizona (Site; **Figure 1**). In accordance with the Arizona Hazardous Waste Management Act Permit for the Site, a Corrective Measures Study Report (CMS Report; Arcadis 2015) was developed and submitted to the Arizona Department of Environmental Quality (ADEQ) on October 30, 2015. The CMS Report presents the development, evaluation, and recommendation of a corrective measures alternative – Groundwater Alternative GW-2 (Alternative GW-2) – for constituents of concern (COCs) present in groundwater at concentrations above the ADEQ-approved Site groundwater cleanup standards.

The purpose of this design basis is to establish the basis for the engineering design of a full-scale groundwater treatment system at the Site. Consistent with the CMS Report (Arcadis 2015) and the Corrective Measures Implementation Work Plan (CMI Work Plan; Arcadis 2016), UPCO is planning to design and install a treatment system to treat perchlorate, 1,4-dioxane, and 1,1-dichloroethene in groundwater at the Site. Bench-scale testing was performed to evaluate and select the perchlorate treatment technology: anoxic biological treatment within a fluidized bed bioreactor (FBR). Field-scale pilot testing was conducted to evaluate treatment performance and injection well performance, to develop full-scale design criteria, and to obtain an understanding of operational and maintenance challenges. This design basis describes the pilot test results, pump test results, modeling outputs, treatment objectives, extracted water quality, treated water quality, solids management, and other key criteria used in sizing equipment and processes for the proposed system.

To address COC concentrations exceeding cleanup standards in the bedrock aquifer source area of the Site, remedial Alternative GW-2 includes groundwater extraction, ex-situ pretreatment of groundwater containing 1,4-dioxane and 1,1-dichloroethene with liquid granular activated carbon, treatment of groundwater containing perchlorate with an anoxic FBR, and reinjection of treated groundwater. Groundwater extraction, ex-situ treatment, and reinjection into the bedrock aquifer around the periphery of the perchlorate groundwater plume will remove constituent mass and provide hydraulic control of the plume. Additionally, groundwater extraction and reinjection within the bedrock aquifer source area will increase flushing through the source area, thereby increasing the constituent mass removal rate and decreasing the time to achieve the groundwater cleanup standards.

2 GENERAL DESIGN CONSIDERATIONS

The GWTP is proposed to be located at 25401 North Central Avenue in Phoenix, Arizona, on Parcel APN 210-14-050, which is owned by UPCO (**Figure 2**). The location is optimal for the GWTP because it is centrally located within the proposed extraction and injection well field, which minimizes conveyance piping installation. In addition, the parcel has an access road that extends around the proposed plant location, making vehicular access safe and efficient. The GWTP will be inclusive of the extraction and injection wells, conveyance piping, the treatment building, and treatment equipment and appurtenances. Groundwater conveyance piping, electrical power conduits, and control conduits will be consolidated in common trenches to the extent possible to minimize construction costs. Where possible, trenches for groundwater conveyance piping and conduits are proposed to be located within previously disturbed areas (e.g., within existing roadways, previous building locations) at the Site on Parcel APN 210-14-050 (**Figure 2**) to minimize construction activities in vegetated areas and preserve flora and fauna.

3 TREATMENT GOALS

The primary objective of the GWTP is to provide hydraulic capture and treat extracted water to achieve the Site groundwater cleanup standards before reinjection to flush contaminant mass toward the extraction well network. The ADEQ-approved Site groundwater cleanup standards for the COCs, as established in the CMI Work Plan (Arcadis 2016), are listed in **Table 1**.

Table 1. Site Groundwater Cleanup Standards

Constituent	Groundwater Cleanup Standard (µg/L)
Perchlorate	14
1,4-Dioxane	3.5
1,1-Dichloroethene	7

Note:
µg/L = micrograms per liter

Perchlorate is the primary COC considered for this treatment system design. The maximum concentration of perchlorate in groundwater at the Site was detected in extraction well IW-1 in April 2017 at approximately 71,300 µg/L. As discussed in Section 7.3.1, treatment system design is based on a blended influent perchlorate concentration of 10,000 µg/L.

1,4-Dioxane has been detected in only one well, MW-20; therefore, groundwater from this well will be pretreated separately from other groundwater sources for removal of 1,4-dioxane before treatment of perchlorate via the FBR, as described in Sections 7.1 and 7.2.

Although 1,1-dichloroethene is listed as a COC for the Site, the highest concentration detected was 7.1 µg/L in 2016 in well PW-1, which only slightly exceeds the cleanup standard of 7 µg/L. In January 2017, the 1,1-dichoroethene concentration in well PW-1 was 3 µg/L. This design assumes that the 1,1-dichoroethene concentration in groundwater from PW-1 will remain below the cleanup standard, and therefore, no treatment of groundwater from PW-1 will be required. In the unlikely event that the 1,1-dichoroethene concentration trend were to unexpectedly increase during remedy implementation, PW-1 could be connected to the liquid-phase granular-activated carbon (LGAC) pre-treatment system as an extraction well with anticipated flow rate of 5 gallons per minute (gpm). The design anticipates this potential remedy adjustment by incorporating infrastructure and operational flexibility necessary to handle this contingency. Furthermore, 1,1-dichoroethene is incorporated into the design basis as a minor influent concentration parameter for certain unit processes.

4 GROUNDWATER MODEL

As described in the UPCO Supplemental Groundwater Pre-Design Study Summary Report (Arcadis 2014), the ability of existing well infrastructure at the Site to recirculate groundwater within the contaminated groundwater zone and to hydraulically control the groundwater plume was numerically modeled and validated with several multi-day extraction and injection tests. Wells IW-1, EW-1, MW-20, and EW-2 were selected as extraction wells, and wells IW-3, MW-11, MW-5, RW-1, and RW-2 were designated as injection wells, including the addition of newly proposed injection well RW-3 (**Table 2**). The resultant simulation supported the use of the existing wells as proposed and established the basis for the extraction and injection flow rates.

Table 2. Well Selection for Modeling Groundwater Alternative GW-2

Extraction Well	Simulation Extraction Rate (gpm)	Injection Well	Simulation Injection Rate (gpm)
IW-1	4	RW-1	3
EW-1	6	RW-2	2
MW-20	4	MW-5	8
EW-2	20	MW-11	5
		IW-3	16
		RW-3	3

The remedial strategy employs the injection and extraction wells as identified in **Table 2** and can be optimized over time to enhance perchlorate mass removal while concurrently flushing the impacted aquifer with treated water. A minimum groundwater extraction flow rate of 34 gpm and an injection flow rate of 37 gpm were used in modeling plume control and flushing of the aquifer. The basis of design verifies a range of operation that includes these extraction and injection flow rates. For ease of design, 35 gpm was chosen as the nominal extraction and injection flow rates, with a maximum treatment capacity of 75 gpm.

The extraction well configuration and flow rates were determined based on four key considerations:

1. Identification of existing wells that can be used to minimize new infrastructure costs.
2. Ability to obtain property access for well installation (identifying areas where well installation would not be feasible).
3. Utilizing the naturally occurring hydraulic gradient and maintaining hydraulic capture of groundwater containing perchlorate at concentrations exceeding the corrective action objective (CAO).
4. Maximizing mass recovery by extracting from high-concentration areas within the plume.

Injection well configurations and rates were determined based on four key considerations:

1. Identification of existing wells that can be used to minimize new infrastructure costs.

2. Locating perimeter wells to hydraulically constrain groundwater containing perchlorate within the bedrock aquifer to prevent further migration.
3. Selection of interior injection well locations to encourage groundwater flow in stagnant areas identified during modeling, and that may develop during remedy operation, and to manage hydraulic gradients to flush contaminants toward extraction wells, while not compromising hydraulic capture of groundwater.
4. Utilization of wells that enhance pore flushing within the bedrock aquifer in areas with high concentrations of perchlorate in groundwater.

The extraction and injection well locations provide the optimal configuration of existing wells in accessible areas. The numerical model may be periodically updated during remedy operation to better reflect existing conditions and evaluate optimization. Although the groundwater model is very beneficial in the initial design phase and optimization evaluation, the operational data will be the primary tool to evaluate remedy performance. During operation of remedial Alternative GW-2, remedial performance data will be used to further validate the current numerical model for the Site. The validated numerical model will then be used to assist in decision-making for optimization of remedial performance. Details regarding use of the numerical model with remedial performance data will be presented in the Operation, Maintenance, and Monitoring Plan for the GWTP.

5 BIOREACTOR PILOT TEST

A pilot-scale FBR was designed and operated to degrade perchlorate concentrations representative of anticipated full-scale concentrations. The pilot test was intended to demonstrate successful biological treatment of perchlorate at the Site location in an arid desert climate.

The pilot test provided the following information, which was used to inform the full-scale design:

- The FBR effectively treated perchlorate concentrations representative of full-scale design to below site-specific treatment standards.
- Biological proliferation was slower than expected when using methanol as a carbon source (electron donor); therefore, acetic acid will be utilized as the carbon source at full-scale to take advantage of its enhanced reaction kinetics and reduced health and safety considerations (non-flammable in dilute form to be used in design).
- Relatively poor perchlorate treatment performance during biological startup continued until low residual levels of ammonia, phosphate, and total organic carbon (TOC) were established in the bioreactor effluent.
- Biological seeding and batch startup were initially attempted and resulted in elevated total suspended solids (TSS) generation due to suspended growth biomass washout during the batch cycling process. Continuous flow biological seeding and startup were then attempted and resulted in successful biological acclimation.
- Effective secondary perchlorate treatment is a requirement when performing initial startup activities; ion exchange (IEX) filtration proved to be an effective solution for perchlorate removal at the pilot scale.
- Bag filtration (10 micron) successfully removed suspended solids before IEX and groundwater reinjection. Due to the poor scalability of bag filtration used during the pilot test and higher anticipated full-scale flow rates, an alternative filtration system is necessary at full-scale.
- Reinjection flow rates were successfully controlled with manual valve throttling and multiple inline check valves installed on the injection drop pipe. This simple approach proved to be successful in maintaining positive injection pressure and adequately controlling the reinjection process.

6 GROUNDWATER CONVEYANCE

The design provides as much flexibility as possible to allow extraction wells to be used as injection wells and vice versa, if necessary, to facilitate recirculation of groundwater to further optimize aquifer flushing. Injection drop pipes and extraction well pumps would need to be removed/installed at alternate wells to modify extraction and injection.

The design incorporates infrastructure, equipment, and processes to allow for operational flexibility to adjust flow rates from extraction wells and into injection wells to facilitate optimization of aquifer flushing and restoration. For groundwater extraction, the design provides flow rate adjustment capability by using a variable frequency drive (VFD) on each of the extraction pump motors. Each extraction pump VFD speed control loop will be informed via flow rate (pulse transmitting flow totalizer) and programmed to target the desired individual extraction flow rate. For treated water injection, the design provides flow rate adjustment capability by using a VFD on the injection pump motor, combined with manually adjustable diaphragm valves, and pressure regulators on each individual injection well conveyance line. The injection pump's VFD control loops will be informed via pressure (pressure transmitter) and programmed to target the desired injection manifold pressure.

6.1 Remediation Well Design

Existing groundwater wells will be modified at the wellhead and incorporated into the design as injection and extraction wells in accordance with the CMS Report and the CMI Work Plan (Arcadis 2015, 2016, respectively). Existing wells IW-1, IW-3, EW-1, EW-2, RW-1, and RW-2 are 5-inch-diameter (4.767-inch inside-diameter) wells, with Schedule 80 polyvinyl chloride (PVC) riser and 0.05-inch slot-sized stainless-steel wire-wrap screens. Well MW-20 is a 5-inch-diameter (4.767-inch inside-diameter) well, with Schedule 80 PVC riser and a Schedule 80 PVC slotted (0.05-inch slot size) screen. Wells MW-5 and MW-11 are 4-inch-diameter (4.026-inch inside-diameter) wells, with Schedule 40 PVC riser and Schedule 40 PVC slotted (0.02-inch slot size) screen. Well PW-1 is a 6.25-inch-diameter well, with steel riser and round-cut-slotted steel screen. The well screen intervals and depths to groundwater are identified in **Table 3** and their locations are shown on **Figure 2**.

Proposed well RW-3 will be constructed at the approximate location depicted on **Figure 2**, and will be screened in the bedrock layer with a screened interval length of approximately 75 to 80 feet. Final depth of well construction and screen interval depend on the results of borehole geophysical data to be collected during installation. Well construction will consist of drilling a 10-inch-diameter borehole using a conventional air-rotary method and installing a 5-inch-diameter Schedule 80 PVC casing. A 20-foot section of low carbon steel conductor casing will be grouted in place to provide a surface seal and prevent collapse of the borehole during drilling. The screened interval will consist of wire-wrapped stainless-steel screening material, with Schedule 80 PVC casing to the surface.

Table 3. Remediation Well Screen Intervals and Depth to Groundwater

Well ID	Total Casing Depth	Top Screen Interval	Bottom Screen Interval	Depth to Groundwater	Drawdown	Mounding
Extraction Wells	**(feet bgs)**	**(feet bgs)**	**(feet bgs)**	**(feet btoc)**	**(feet)**	**(feet)**
IW-1	335	250	335	248.57	1-40	
EW-1	300	250	300	247.6	1-25	
MW-20	290	235	285	233.84	1-25	
EW-2	305	210	305	213.21	1-20	
PW-1[a]	500	420	480	212.32	1-10	
Injection Wells	**(feet bgs)**	**(feet bgs)**	**(feet bgs)**	**(feet btoc)**	**(feet)**	**(feet)**
RW-1	340	265	340	258.83		5-25
RW-2	332	252	332	263.28		20-100
MW-5	285	230	280	246.80		1-20
MW-11	315	260	310	259.19		1-25
IW-3	255	180	255	222.00		0.5-10
RW-3[b]	400	330	400	211.00		1-30

Notes:
bgs = below ground surface
btoc = below top of casing measuring point
a = Potential future extraction well, if necessary
b = Well not yet installed

6.2 Groundwater Extraction and Conveyance

Groundwater will be extracted using electric submersible pumps. The extraction well pumps were initially sized based on the conditions of each individual well. Characteristics include depth of well casing, depth to groundwater, distance from the GWTP, conveyance piping material, conveyance piping diameter, and design flow rate. **Appendix A** provides the summary of hydraulic analysis calculations and system curve analysis for these pumps.

Extraction well design details are provided in **Table 3** above.

Extracted water will be pumped to the GWTP via high-density polyethylene (HDPE) conveyance lines. To ensure piping integrity, HDPE conveyance lines will be installed, and pressure tested as explained in **Appendix B**. Well locations are shown on Figure 2. Depth of burial will be adjusted to maintain a minimum of 2.5 feet of cover over electrical conduit to meet applicable codes. **Appendix C** and **Appendix D** provide trench excavation, backfilling, compaction and controlled low-strength material specifications. Extracted

water conveyance lines will have a minimum diameter of 2 inches for ease of pipe cleaning. The current design also includes a capped threaded connection point on the extraction wellhead piping for future installation of a vacuum relief valve if extraction wells are converted to injection wells in the future. Arcadis is opposed to the installation of air relief valves in the extraction well vaults due to the common failure of leaking air relief valves. It is common for air relief valves to leak due to scaling or valve seat blockage when extracting groundwater. Instead, Arcadis plans to use the sample ports as manual air relief valves during startup and shutdown activities, and will incorporate these procedures into the system operation and maintenance manual. Extraction well pumps are designed with integral check valves that prevent water falling back down the well and causing an increase of vacuum. Thus, installation of vacuum relief valves in extraction wellhead piping is not necessary.

The anticipated flow rates from each extraction well based on the groundwater model are summarized in **Table 4**.

Table 4. Extraction Well Flow Rates

Well ID	Flow Rate (gpm)
IW-1	4
EW-1	6
MW-20	5[a]
EW-2	20
Total	**35**[b, c]

Notes:
[a] Model flow rate for MW-20 was 4 gpm.
[b] Model total flow rate was 34 gpm.
[c] Excludes flow rate of 5 gpm for potential future extraction well PW-1.

7 GROUNDWATER TREATMENT PLANT

7.1 Overview

The nominal treatment system flow rate for the basis of design is 35 gpm, with a maximum treatment capacity of 75 gpm.

As discussed in Section 3, 1,4-dioxane has been detected in only one well, MW-20; therefore, groundwater from this well will be pretreated separately from other groundwater sources for removal of 1,4-dioxane before treatment of perchlorate via the FBR. Specifically, the 1,4-dioxane unit process (LGAC) will be sized according to a nominal flow rate of 5 gpm for MW-20. Separate pretreatment of groundwater from MW-20 allows for smaller vessel sizing and less frequent carbon replacement, reducing capital, and operation and maintenance (O&M) cost. The LGAC design incorporates a maximum hydraulic capacity of 10 gpm to allow for future expansion and treatment of 1,1-dichoroethene in groundwater from well PW-1, if necessary.

The process flow diagram (PFD) for the treatment system is included as sheet PFD in the attached design drawings. The primary unit processes described in this basis of design include groundwater extraction, groundwater conveyance, flow equalization, LGAC filtration, (for pretreatment of 1,4-dioxane from well MW-20), bioreactor treatment (perchlorate removal), multi-media filtration (TSS removal), IEX (perchlorate polishing), and groundwater reinjection. A bill of materials list is provided in **Appendix E**.

As discussed in Section 7.3, an anoxic FBR is the primary technology for perchlorate treatment. Fluidized bed bioreactors are a type of ex-situ biological treatment technology used to biologically degrade organic constituents in groundwater. In fluidized bed systems, inert media with a large surface area are placed within the bioreactor vessel. Large surface area media can achieve high biomass concentrations, resulting in short hydraulic retention times compared to conventional suspended growth systems.

As explained in Section 7.5, the design utilizes IEX as the primary perchlorate treatment during initial biological startup of the bioreactor, temporary treatment in the event of extended biological system upset, and at the tail end of the lifecycle operation of the remedy when perchlorate concentrations into the biological bioreactor are less than approximately 250 µg/L, in association with specific reductions in other oxyanions (e.g., sulfate, nitrate, carbonates).

7.2 Liquid-Phase Granular-Activated Carbon

As indicated previously, detected concentrations of 1,4-dioxane in extracted groundwater from well MW-20 exceed the Site cleanup standard. No other wells onsite contain 1,4-dioxane concentrations exceeding the Site cleanup standard. The maximum 1,4-dioxane concentrations are expected to be 20 µg/L, and the nominal flow rate for basis of design is 5 gpm, with a maximum flow rate of 10 gpm. This design uses LGAC filtration upstream of the bioreactor to pretreat 1,4-dioxane in extracted groundwater from MW-20. Based on the chemical properties of 1,4-dioxane, it has a low adsorption capacity. This is a challenge that can become exacerbated in the presence of high concentrations of co-contaminants that readily sorb to LGAC (i.e., chlorinated solvents). However, given that the concentrations of other constituents that consume carbon (such as volatile organic compounds or TOC) are relatively low, LGAC offers a cost-

effective treatment solution compared to alternatives, such as an advanced oxidation process (AOP). While the Best Management Practice for ex-situ treatment of 1,4-dioxane is typically AOP, if placed upstream of the biological bioreactor, the effluent water chemistry of the AOP contains residual peroxide and other oxygen species that increase oxyanion loading to the biological bioreactor. This increases the required bed volume for effective treatment, resulting in a larger and costlier bioreactor. Furthermore, compared to the designed upstream LGAC life-cycle cost, the life-cycle cost of an upstream AOP would be slightly higher, but also adds system complexity, and adversely affects the bioreactor chemistry as stated above. Placing an AOP downstream of the bioreactor to avoid adversely affecting the bioreactor chemistry results in the need to treat the entire system flow rate of 35 gpm or more, which substantially increases the costs to implement AOP. Moreover, LGAC placed upstream of the bioreactor is the most cost-effective treatment for 1,4-dioxane removal, and is therefore, incorporated into the basis of design.

Because 1,4-dioxane concentrations in groundwater are approximately 20 µg/L and the extent of 1,4-dioxane in groundwater is localized within a relatively small portion of the bedrock aquifer near well MW-20, the remediation timeframe to achieve the 1,4-dioxane CAO is expected to be significantly shorter than the remediation timeframe to achieve the perchlorate CAO. Therefore, design of LGAC pretreatment for groundwater extracted from MW-20 assumes that pretreatment will not be necessary for the full duration of GWTP operation and incorporates a bypass loop to allow for direct treatment of groundwater from MW-20 by the FBR, if applicable. The bypass loop allows for decommissioning of the LGAC pretreatment system and continued treatment of groundwater from MW-20 without interruption to the remaining GWTP operations.

The general influent water quality data used to assess LGAC treatment are included in **Table 5**. Arcadis reviewed the water chemistry with Prominent Systems, Inc., who provided a computer model simulation to assess granular-activated carbon (GAC) consumption. The modeling output indicates that LGAC adsorption rates for 1,4-dioxane will not be adversely affected by the anticipated influent chemistry.

Table 5. Influent Water Quality – LGAC Design

Constituent	Site Cleanup Standard (mg/L)	Projected Influent Concentration (mg/L)	Basis
1,4-Dioxane	0.0035	0.020	Historical Sample Data
1,1-Dichloroethene	0.007	0.0071	Historical Sample Data
Perchlorate	0.014	0.35	Historical Sample Data
TOC	Not Applicable	ND	Historical Sample Data
Total Dissolved Solids	Not Applicable	330	Historical Sample Data
Chloride	Not Applicable	44	Historical Sample Data
Alkalinity	Not Applicable	160	

Notes:
$CaCO_3$ = calcium carbonate
mg/L = milligrams per liter
ND = non-detect

Design parameters for the LGAC system are presented in **Table 6**.

Table 6. Liquid-Phase Granular-Activated Carbon Design Parameters

Design Parameter	Value	Basis
Design Flow Rate	5 gpm	Groundwater Model
1,4-Dioxane Concentration	20 µg/L	Influent Water Quality Data
Empty Bed Contact Time	40 minutes	Vendor-Recommended 40 to 60 Minutes
Carbon Media Volume	26.70 ft^3	Calculation (per vessel)
Vessel Diameter	3 feet	Standard Available Size
Carbon Bed Height	3.78 feet	Calculation (per vessel)
LGAC Vessel Size	1,000 lbs	Desired Empty Bed Contact Time
Actual Hydraulic Loading	0.7 gpm/ft^2	Typical Range 3 to 8 gpm/ft^2
Number of LGAC Vessels	3	Desired Changeout Frequency, Optimized Carbon Usage
Treatment Capacity	1,930 bed volumes	Vendor Modeled
Time to Breakthrough	108 days	Treatment Capacity (two 1,000-pound vessels)
Backwash Loading Rate	5 gpm/ft^2	Typical Value, Vendor Recommended
Backwash Flow Rate	35 gpm	Calculation
Backwash Duration	10 minutes	Vendor Recommended, Typical Value
LGAC Carbon Type	12 x 40 mesh Coconut shell-based granular-activated carbon	Bench-Scale Testing and Vendor Recommendation
Maximum Working Pressure	60 psi	Vendor Specifications
Vessel Material	Epoxy-coated steel	Compatibility

Notes:
ft^3 = cubic feet
gpm/ft^2 = gallons per minute per square foot
µg/L = micrograms per liter
lbs = pounds
psi = pounds per square inch

The LGAC system incorporates three adsorbers, including lead, intermediate, and lag vessels. Lead and lag positions can be reversed such that the lag vessel can become the new lead position, while the intermediate vessel does not change position. Each vessel will contain 1,000 lbs of carbon media, and carbon changeouts will occur when 1,4-dioxane concentrations detected in the effluent of the intermediate vessel are approximately 10% of the influent concentration. Carbon changeout will replace

the media within the lead and intermediate vessel (two-vessel changeout), and manifold valving will be adjusted to reverse the lead and lag positions. This method allows for effective use of carbon media and reduces overall media changeout cost. Breakthrough monitoring at the LGAC vessels will be performed as the system is placed online to better quantify the site-specific changeout frequency.

An additional consideration for vessel sizing is associated with the preference to increase the time between changeouts. It is important to recognize that at low influent flow rates (e.g., less than 1.5 gpm/ft^2 of vessel cross-sectional area), the potential exists for high-flow-through channels to form, which can result in early breakthrough in the carbon bed. When designing the LGAC process to treat 1,4-dioxane, it can be challenging to obtain a balance between optimal empty bed contact time (EBCT) and typical hydraulic loading ranges. The design focuses on maximizing EBCT to increase 1,4-dioxane removal efficiency and includes LGAC backwashing functionality to remove high-flow-through channels if they form.

Consideration was given to incorporating an additional equalization tank, transfer pump, and associated controls into the process flow to allow for collection of extracted groundwater (e.g., in a 500-gallon tank) and periodic transfer through the LGAC vessels at a flow rate that would minimize the potential formation of high-flow-through channels (e.g., 20 to 25 gpm). However, the benefits of reducing the risk of channeling do not outweigh the additional system complexity associated with introducing a batching operation into the design.

7.3 Bioreactor Treatment

7.3.1 System Design

Arcadis has compiled historical groundwater sampling data, as well as sampling data collected for the bioreactor pilot test to develop an understanding of influent water quality as it relates to the selected bioreactor treatment technologies and treatment objectives. The FBR projected influent water chemistry and cleanup standards are included in **Table 7**.

Table 7. Bioreactor Projected Influent and Effluent Water Quality

Constituent	Groundwater Cleanup Standard (mg/L)	Projected Influent Concentration (mg/L)	Projected Effluent Concentration (mg/L)	Basis
Perchlorate	0.014	10	ND	Pilot Test and Vendor Model
1,4-Dioxane	0.0035	ND	ND	Weighted Average by Blending and LGAC Treatment of MW-20
1,1-Dichloroethene	0.007	ND	ND	Historical Sample Data Pilot Test

Constituent	Groundwater Cleanup Standard (mg/L)	Projected Influent Concentration (mg/L)	Projected Effluent Concentration (mg/L)	Basis
Dissolved Oxygen	Not Applicable	8.0	ND	Pilot Test and Vendor Model
pH	6.5-8.5	7.5	7.5	Pilot Test and Vendor Model
Nitrate	10	2.0	ND	Pilot Test and Vendor Model
Sulfate	Not Applicable	6.4	6.4	Pilot Test and Vendor Model
TSS	Not Applicable	5.0	10	Pilot Test and Vendor Model
TOC	Not Applicable	ND	5	Pilot Test and Vendor Model
Total Alkalinity (as HCO_3)	Not Applicable	150	150	Pilot Test and Vendor Model
Ammonia Nitrogen (as Ammonium)	Not Applicable	ND	1	Pilot Test and Vendor Model
Total Phosphate	Not Applicable	ND	1	Pilot Test and Vendor Model

Notes:
HCO3 = bicarbonate

Arcadis has developed a design basis for the FBR vessel based on pilot test results and previous experience in the design and operation of these types of systems. That design basis has been compared to vendor modeling for an FBR system. In this case, Envirogen Technologies, Inc. (Envirogen) was used for comparison purposes. Envirogen has more than 40 FBR installations across the United States related to perchlorate treatment. **Table 8** provides a comparison between the Arcadis design basis and the vendor model.

The maximum hydraulic treatment capacity of the FBR system is 75 gpm. Pump hydraulics and head-loss calculations have been developed using that capacity. The FBR design for this project was based on a flow rate of 35 gpm at concentrations of dissolved oxygen, nitrate-nitrogen, and perchlorate up to 8.0 mg/L, 2.0 mg/L, and 10 mg/L, respectively. If the flow rate is increased to 75 gpm (and the nitrate and dissolved oxygen remain as the constant values) shown above, it will be possible to still treat between 5 to 10 mg/L of perchlorate with the proposed FBR. At the upper range of perchlorate loading (i.e., 8 to 10 mg/L), with or without constant dissolved oxygen and nitrate concentrations, the secondary IEX treatment will be required.

Table 8. Bioreactor Design Parameters

Design Parameter	Arcadis Model	Vendor Model	Basis
Design Flow Rate (gpm)	35	35	Groundwater Model
Maximum Flow Rate (gpm)	75	75	Future Expansion
TOC:Perchlorate Ratio	2.0	1.2	Previous Experience
Perchlorate (lbs/day)/Media (100 cubic feet)	1.5	1.8	Previous Experience
TOC:N:P Ratio	100:5:1	100:5:1	Typical Value
Perchlorate (mg/L)	10	10	Historical Sample Data
Perchlorate (lbs/day)	4.2	4.2	Calculation
TOC (lbs/day)	8.4	5	Calculation
Nitrogen (lbs/day)	0.42	0.25	Calculation
Phosphorous (lbs/day)	0.08	0.05	Calculation
Unexpanded Media Depth (feet)	5.0	4.0	Required Media Volume for Complete Treatment
Expanded Media Depth (30%) (feet)	6.5	5.2	Pilot Test and Vendor Model
HRT (minutes)	61	49	Previous Experience and Vendor Model
Bioreactor Dimensions (diameter x height)	7.5 feet x 12 feet	7.5 feet x 16 feet	Required Media Volume for Complete Treatment, Nominal Vendor Size

Notes:
HRT = hydraulic residence time
lbs/day = pound per day
N = nitrogen
P = phosphorus

Biological proliferation was slower than expected when using methanol as a carbon source during the pilot study; therefore, acetic acid will be utilized as the carbon source at full-scale to take advantage of its enhanced reaction kinetics (Arcadis 2017). When modeling with acetic acid, the bioreactor size can be reduced due to enhanced kinetics and/or biomass characteristics (e.g., consistency of biofilms, tendency to form pin floc or discrete particles), which will reduce full-scale bioreactor cost. Building permitting through the City of Phoenix will also constrain the maximum allowable height of the bioreactor and equipment building. A comparison of the proposed design to the vendor model indicates comparable bioreactor size requirements and nutrient demand.

As shown in **Table 9**, historical data indicate low metals concentrations in groundwater. Although inorganics were considered in the design, no significant metal precipitation was observed during the pilot test. Therefore, Arcadis does not expect significant inorganic solids precipitation to occur in the biological treatment process.

Table 9. Bioreactor Projected Influent Metals Chemistry

Constituent	Projected Influent Concentration (mg/L)	Basis
Arsenic	0.026	Historical Sampling Data
Barium	0.1	Historical Sampling Data
Cadmium	0.0012	Historical Sampling Data
Calcium	40.0	Historical Sampling Data
Chromium	0.012	Historical Sampling Data
Iron	0.2	Historical Sampling Data
Lead	0.005	Historical Sampling Data
Magnesium	13.1	Historical Sampling Data
Manganese	0.015	Historical Sampling Data
Mercury	0.0002	Historical Sampling Data

7.3.2 Bioreactor Nutrient Addition and pH Control

Pilot test results demonstrated relatively poor perchlorate treatment performance until a low residual level of ammonia was established in the FBR effluent. Low residual amounts of ammonia, phosphate, and TOC in the form of acetic acid will be targeted to promote biological growth: <1 mg/L ammonia nitrogen as nitrogen (NH4-N), <1 mg/L phosphate as phosphorous (PO4-P), and <5 mg/L TOC. Nitrogen and phosphorus will be supplied via separate feeds (e.g., urea as the nitrogen source, and phosphoric acid as the phosphorus source) to minimize excess nutrients in the injectate. The bulk biological process is anoxic; therefore, nitrification of organoamines or ammonia is not a concern.

As shown in **Table 10**, chemical storage totes and dedicated chemical metering pumps are sized using an initial ratio of 100:5:1 ratio for TOC:nitrogen:phosphate and will be provided to inject each chemical into the FBR recirculation line.

Based on the potential loads of oxyanions for this application, using a starting ratio of 100:5:1 for TOC: nitrogen:phosphate is appropriate. The nutrient residuals will be monitored in the field, and adjustments will be made to prevent nutrient residual concentrations from exceeding the target values as the biomass inventory becomes established and steady-state operations are achieved.

Extracted groundwater total alkalinity and pH are anticipated to be 150 mg/L and neutral, respectively. Because biological reduction of nitrate and perchlorate adds alkalinity to the system, the vendor's standard FBR system design is furnished with a pH control system to facilitate addition of acid to maintain pH conditions that meet discharge limits. However, pH control was not needed during pilot testing and is not expected to be necessary at full-scale operation due to the relatively high alkalinity (i.e., buffering capacity) present in the groundwater.

Bioreactor design parameters for pH adjustment and nutrient addition are provided in **Table 10**.

Table 10. Bioreactor pH Adjustment and Nutrient Addition Design Parameters

Design Parameter	Flow Rate[a] (gallons/day)	Loading Rate[b] (lbs/day)	Tank Size (gallons)	Basis
TOC	3	10.8	55	Vendor-Modeled, 50% Acetic Acid
Nitrogen	0.05	0.5	55	Vendor-Modeled, 40% Urea Solution
Phosphorus	0.008	0.1	55	Vendor-Modeled, 75% Phosphoric Acid
pH Control	TBD	TBD	55	No pH Control Needed during Pilot Test, 37% Hydrochloric Acid

Notes:
[a] Based on feed chemical (e.g., 50% Acetic Acid)
[b] Based on design parameter (e.g., TOC)
TBD = to be determined (pH control likely unnecessary)

7.3.3 Bioreactor Media and Bed Height Control

Based on the consistent fluidization properties and cost, use of uniformly graded sand media was an off-the-shelf solution for the pilot test. Based on the relatively low oxyanion loading (dissolved oxygen, nitrate, and perchlorate), Arcadis recommends a specific type of GAC for use in the full-scale FBR that has a higher surface area than sand. This material has a precise hardness, porosity, iodine value, specific density, and sieve proportion needed for effective fluidization. The interstitial porosity provides the advantage of enhanced fix film attachment and improved treatment kinetics at a lower loading, while also offering the benefit of some level of adsorption of TOC to serve as a reserve of electron donor should the feed of electron donor be interrupted.

The bed height control and biomass separation system will use compressed air to control fluidized bed height. During the manual wasting process, biomass is separated from the fluidization media and conveyed out of the system via the bioreactor effluent. This type of biomass separation system has been successfully deployed by Envirogen in more than 40 FBR perchlorate treatment plants over the past 20 years without adversely affecting perchlorate removal (Envirogen). The air that is fed through the biomass separator quickly bubbles out the top of the vessel, so the opportunity for dissolution of the 21% oxygen is reduced significantly because of the very short residence time. In addition, the volume of air supplied to an anoxic system is small, so there is minimal opportunity for the minor increase of dissolved oxygen to adversely affect the oxidation-reduction potential (ORP) to trend toward oxidizing conditions. Finally, the operation of the biomass separators is typically intermittent (depending on bed growth), and operates at the top of the reactor to further limit oxygen transfer. However, should dissolved oxygen from the biomass separation system unexpectedly affect the ORP within the reactor adversely, nutrient and chemical injection rates can be easily changed to optimize the ORP and maintain adequate perchlorate removal.

According to the FBR vendor, Envirogen, FBR bed fluidization and bed height control is as follows:

- Within the FBR process, excess biomass is produced as a byproduct of the microbial mediated oxidation-reduction reaction using the electron donor (i.e., acetic acid) and electron acceptor (oxygen, nitrate-N, and perchlorate). The biomass will accumulate on the FBR media causing the fluidized bed height to increase. The inlet of the biomass separator device is located at the top of the FBR at a set height below the water/media interface to remove the excess biomass accumulation on the media. The biomass separator lifts media from near the top of the fluidized media bed using an air lift tube fed by compressed air. Media with attached biomass and water is directed through the lift tubes into the mixing chamber located at the water surface. Both lifting, and mixing are controlled by manually adjusting the air flow to the biomass separator. The media and biomass are separated in the mixing chamber though the air agitation. With the detached media and biomass then dropping back into the water, the lighter biomass exits with the FBR effluent and the media falls back downward in the vessel (as it has a higher specific density). The biomass separator is generally operated continuously.
- Under certain conditions, the biomass growth does not occur at the top of the media bed, but closer to the bottom. In this event, an in-bed eductor cleaning system is implemented to control the fluidized bed height. The in-bed eductor provides highly pressurized water that agitates the lower sections of the bed and separates the media from the biomass via shearing effects, reducing media bed height. The media remains in the vessel while the biomass floats out with the FBR effluent. The in-bed cleaning using the eductor is manually operated and is conducted as needed.
- The FBR fluidization pump is used to fluidize reactor media and expand the bed height of the media. Fluidization of the media bed evenly distributes nutrients and substrate to promote biological treatment. When the media bed is properly expanded, treatment efficiency improves due to increases in the biologically active bed volume and media bed surface area.

7.4 Multi-Media Filtration

Multi-media filtration is provided ahead of the IEX vessels. IEX influent specification requires filtration of suspended solids to less than 10 microns. Multi-media filtration is an effective technology to filter suspended solids to less than 5 microns and is less intensive from an O&M standpoint than alternatives, such as bag or cartridge filtration. The purpose of the vessels is to remove particles that can foul the resin bed and lead to unacceptable operating pressures in the vessels. While pilot test results demonstrate successful removal of solids produced in the biological process using a 10-micron bag filter, treated water from the bioreactor in the full-scale design will be filtered using a multi-media filter due to its ability to filter particles down to 5 microns. The design flow rate for the multi-media filtration system are a nominal flow rate of 35 gpm and a maximum flow rate of 75 gpm. The multi-media filtration design parameters are provided in **Table 11**.

Based on prior experience and vendor modeling, the expected TSS production from the bioreactor effluent will result in a concentration of 3 to 5 mg/L. Combining the historical groundwater monitoring TSS extraction of 5 mg/L and a bioreactor effluent TSS of 5 mg/L results in a steady-state design parameter of 10 mg/L as the multi-media filter influent TSS concentration. While this results in a nominal TSS concentration of 10 mg/L, experience with similar biological treatment systems have demonstrated that startup and upset conditions can result in a temporary bioreactor effluent TSS of up to approximately 50 mg/L. Therefore, the maximum TSS concentration used in the design of the multi-media filter is 50 mg/L to account for each of these operational conditions.

Table 11. Multi-Media Filtration Design Parameters

Design Parameter	Steady State	Startup/Upset	Basis
Design Flow Rate	35 gpm	35 gpm	Groundwater Model, 25 to 74 gpm Optimal Range Per Vendor
Maximum Flow Rate	75 gpm	75 gpm	Future Expansion, 98 gpm Maximum Flow Per Vendor (**Appendix F**)
Total Suspended Solids Concentration	10 mg/L	50 mg/L	Vendor-Modeled, Pilot Test Results
Design Hydraulic Loading	8 gpm/ft^2	8 gpm/ft^2	Typical Range 8 to 10 gpm/ft^2
Filtration Area Required	4.4 ft^2	4.4 ft^2	Calculation
Number of Vessels	1	1	Selected Based on Flow
Design Filter Bed Diameter	2.4 feet	2.4 feet	Calculation
Selected Filter Bed Diameter	2.5 feet	2.5 feet	Nominal Size, Vendor Specifications
Filtration Surface Area	4.9 ft^2	4.9 ft^2	Calculation
Actual Hydraulic Loading	7.1 gpm/ft^2	7.1 gpm/ft^2	Typical Range 5 to 15 gpm/ft^2
Backwash Loading Rate	15 gpm/ft^2	15 gpm/ft^2	Typical Value, Vendor Recommended
Backwash Flow Rate	74 gpm	74 gpm	Calculation
Backwash Duration	10 minutes	10 minutes	Vendor Recommended, Typical Value
Solids Loading to Backwash	2 lbs/ft^2	2 lbs/ft^2	Vendor Recommended, Typical Value
Solids Loading	4.2 lbs/day	21.0 lbs/day	Calculation
Solid Loading at Time of Backwash	9.8 lbs	9.8 lbs	Calculation
Backwash Frequency	2.3 days	0.5 days	Calculation
Daily Backwash Volume	317 gpd	1,585 gpd	Calculation
Filter Media	½-inch × ¾-inch crushed rock (2.5 ft^3) 1.45-millimeter garnet (2.5 ft^3) 0.35-millimeter garnet (7.5 ft^3) 0.75-millimeter anthracite (7.5 ft^3)	½-inch × ¾-inch crushed rock (2.5 ft^3) 1.45-millimeter garnet (2.5 ft^3) 0.35-millimeter garnet (7.5 ft^3) 0.75-millimeter anthracite (7.5 ft^3)	Vendor Specifications

Design Parameter	Steady State	Startup/Upset	Basis
Maximum Effluent Particle Size	5 microns	5 microns	Vendor Specifications
Maximum Working Pressure	100 psi	100 psi	Vendor Specifications
Vessel Material	Epoxy-coated steel	Epoxy-coated steel	Compatibility

Notes:
ft^2 = square feet
gpd = gallons per day

7.5 Ion Exchange

The primary means of treating perchlorate in extracted groundwater is the bioreactor. However, to establish a robust microbial population within the bioreactor, it is necessary to operate the bioreactor in forward flow for a period of 6 to 8 weeks, ramping up flow and loading to build up the inventory of biomass in the media bed. During this bioreactor startup period, perchlorate concentrations in the effluent from the bioreactor may not meet the cleanup standards. Therefore, IEX will be used to polish the bioreactor effluent during initial bioreactor startup.

Once the biological system is optimized and treatment objectives are met, process flow will bypass IEX treatment to minimize IEX loading and reduce changeout frequency. Additionally, it is important to acknowledge that all biological systems experience upsets during operation. Incorporating IEX into the design provides temporary treatment in the event of extended biological system upset, which will confirm that continued treatment system effluent objectives and groundwater capture are maintained.

Project experience and vendor modeling have shown that for perchlorate concentrations lower than 250 µg/L, in association with specific reductions in other oxyanions (e.g., sulfate, nitrate, carbonates), single pass IEX with perchlorate selective resin can be less costly to operate than a biological approach. However, biological treatment completely transforms the perchlorate into chloride ion; therefore, removing it as a potential issue for future concern. With IEX, the perchlorate is removed from the water and transferred to another medium (in this case resin). Once exhausted, the resin needs to be removed from the vessel, transported, and treated. Hence, the risks associated with cradle-to-grave issues must also be considered when evaluating operating costs and assessing technology comparisons. Due to high transportation and disposal costs for spent IEX resin, this technology is not considered feasible as a long-term strategy for the current perchlorate concentrations. However, the design utilizes IEX as the primary perchlorate treatment during initial biological startup, temporary treatment in the event of extended biological system upset, and at the tail end of lifecycle operation of the remedy.

At the tail end of the lifecycle operation of the remedy, IEX can be used as the primary treatment method as groundwater extraction and upgradient flushing reduce the perchlorate load to levels that are low enough for IEX to be more efficient and cost-effective than biological treatment. This adaptable design provides operational flexibility to quickly and easily adjust to inevitable lifecycle changes in groundwater chemistry or flow rate changes needed to optimize the remedy, and minimizes the potential for future capital outlay that would otherwise be required to reconfigure the treatment system. Furthermore, the adaptable design will increase operational uptime, which will in turn reduce the overall remedial time frame.

General water chemistry data used to design IEX treatment are included in **Table 12**.

Table 12. Ion Exchange Influent and Projected Effluent Water Quality

Constituent	Groundwater Cleanup Standard (mg/L)	Projected Influent Concentration (mg/L)	Projected Effluent Concentration (mg/L)	Basis
Perchlorate	0.014	10	ND	Pilot Test and Vendor Model
1,4-Dioxane	0.0035	ND	ND	Weighted Average by Blending and LGAC Treatment of MW-20
1,1-Dichloroethene	0.007	ND	ND	Historical Sample Data Pilot Test
Dissolved Oxygen	Not Applicable	8.0	ND	Pilot Test and Vendor Model
Nitrate	10	2.0	ND	Pilot Test and Vendor Model
Sulfate	Not Applicable	ND	ND	Pilot Test and Vendor Model
TSS	Not Applicable	ND	ND	Pilot Test and Vendor Model
TOC	Not Applicable	ND	ND	Pilot Test and Vendor Model
Total Alkalinity (as HCO_3)	Not Applicable	150	150	Pilot Test and Vendor Model
Ammonia Nitrogen (as Ammonium)	Not Applicable	1	1	Pilot Test and Vendor Model
Total Phosphate	Not Applicable	1	1	Pilot Test and Vendor Model

The IEX treatment proposed for this design includes four treatment vessels operated in series. The initial two vessels will be filled with a low-cost, high-capacity media (Resintech SBG1, or equivalent) that is able to remove perchlorate to concentrations of approximately 60 µg/L. The final two vessels will be filled with perchlorate-specific resin (Resintech SIR-110-HP, or equivalent) to polish the perchlorate leakage from the initial vessels. Both the SBG1 and SIR-110-HP vessels will be able to operate in lead/lag format, with the ability to swap lead/lag positioning with manual valve adjustments. The IEX design was optimized with vendor proprietary models to minimize usage of the higher-cost ion-specific media and provide the majority of treatment with the lower-cost media. IEX regeneration is not included in this design due to limited usage during initial biological startup and restart following upset events. While IEX is in operation, periodic analytical samples will be taken to provide performance monitoring and provide indication when media replacement is necessary.

No significant reduction in perchlorate removal efficiency or capacity was noted from vendor modeling with respect to the metal concentrations present in groundwater. Arcadis does not expect significant adverse effects to perchlorate removal with IEX with respect to metals present in groundwater.

The IEX design parameters are presented in **Table 13**.

Table 13. Ion Exchange Design Parameters

Design Parameter	Design Value	Basis
Flow Rate	35 gpm	Groundwater Model Flow Rate
Maximum Flow Rate	75 gpm	Future Expansion, Per Vendor
Perchlorate Concentration	10 mg/L	Initial Startup and Upset Concentration
Perchlorate Loading	4.2 lbs/day	Calculation
Vessel Diameter	4 feet	Vendor Specifications
Media Height	4 feet	Vendor Specifications
Media Volume	50 ft^3	Calculation
Empty Bed Contact Time	10.7 minutes (per vessel)	Vendor Specifications
Hydraulic Loading	2.8 gpm/ft^2	Vendor Recommended 1 to 20 gpm/ft^2
Number of IEX Vessels	4	Breakthrough Monitoring
Dewatered Media Weight	8,000 lbs	Vendor Specifications for 200 ft^3 in Four 2,000-lb Vessels
IEX Vessel Size	2,000 lbs	Based on Vendor and Nominal Sizes
SBG1 IEX Media Usage	29.4 ft^3 per month	Vendor-Modeled
SBG1 Changeout Frequency	3.4 months	Vendor-Modeled (two vessel changeouts)
SIR-110-HP IEX Media Usage	1.4 ft^3 per month	Vendor-Modeled
SIR-110-HP Changeout Frequency	3 years	Vendor-Modeled (one vessel changeout)
IEX Spent Media Profile	Non-hazardous	No Known Hazardous Constituents
IEX Vessel Material	Epoxy-coated Steel	Compatibility
Maximum Working Pressure	75 psi	Vendor Specifications

7.6 Treated Water Injection

Treated water will be injected by pumping water from the treated water effluent tank through an injection header at the GWTP and then to the injection wells via HDPE conveyance lines. Approximate well and conveyance piping layouts are shown on **Figure 2**. Anticipated flow rates into each injection well based on the groundwater model are summarized in **Table 14**.

Table 14. Injection Well Flow Rates

Well ID	Flow Rate (gpm)
RW-1	3
RW-2	2
MW-5	8
MW-11	5
IW-3	14
RW-3	3
Total	**35**

The total maximum injection flow rate has been designed as 75 gpm to allow operational flexibility and to accommodate potential expansion above the initial 35 gpm listed in **Table 14**. A VFD on the injection pump motor, combined with manually adjustable diaphragm valves and pressure regulators on each individual injection well conveyance line, will be used to target optimal flow rates and pressures for each injection well.

The rapid pressure drop through a single orifice near the bottom of a deep injection well can result in localized cavitation and subsequent release of gasses due to the rapid increase in velocity through the orifice and the corresponding drop in pressure. To maintain positive pressure during reinjection, the design incorporates multiple orifices (i.e., check valves) that are evenly spaced along the drop pipe of the injection well. Injection well check valve sizing calculations are included in **Table 15**.

Table 15. Injection Well Drop Tube and Check Valve Design Parameters

Design Parameter	RW-1	RW-2	MW-5	MW-11	IW-3	RW-3	Basis
Static Depth to Water	258.83 feet	263.28 feet	246.80 feet	259.19 feet	222.00 feet	211.00 feet	Groundwater Data
Well Total Depth	340 feet	332 feet	285 feet	315 feet	255 feet	400 feet	Well Construction
Drop Tube Length	300 feet	300 feet	250 feet	300 feet	250 feet	250 feet	Chosen based on Well Data
Drop Tube Diameter	1½ in	1½ in	1½ in	1½ in	1½ in	1½ in	Head-loss Calculations
Drop Tube Material	SCH. 80	SCH. 80	SCH. 80	SCH. 80	SCH. 80	SCH. 80	Pressure Requirement
Check Valve Spacing	50 feet	50 feet	50 feet	50 feet	50 feet	50 feet	Chosen Interval

Design Parameter	RW-1	RW-2	MW-5	MW-11	IW-3	RW-3	Basis
Number of Check Valves	6	6	5	6	5	5	Calculation
Check Valve Diameter	1½ in	1½ in	1½ in	1½ in	1½ in	1½ in	Head-loss Calculations
Check valve Cracking Pressure	20 psi	20 psi	20 psi	20 psi	20 psi	20 psi	Selected Based on Check Valve Spacing
Pressure Required to Fully Open Check Valve	60 psi	60 psi	60 psi	60 psi	60 psi	60 psi	Vendor Specification (3 x cracking pressure)
Required Drop Tube Pressure at Wellhead (to fully open check valves)	38 psi	38 psi	38 psi	38 psi	38 psi	38 psi	Vendor Specification (3 x cracking pressure - static head on top of check valves)
Maximum Pressure at Discharge of Drop Tube	168 psi	168 psi	146 psi	168 psi	146 psi	146 psi	Calculation[a]
Drop Tube Maximum Pressure Rating	470 psi	470 psi	470 psi	470 psi	470 psi	470 psi	Vendor Specification

Notes:
a Excludes back pressure due to injected water mounding
in = inch
SCH. = Schedule

Vertical 1.5-inch Schedule 80 PVC injection drop piping with a series of inline stainless-steel check valves within the well casing is designed to increase pressure loss and minimize siphoning. To overcome the cracking pressure of the inline check valves, the design is based on a goal of 30 to 40 psi of pressure within the injection piping at the wellhead, as successfully demonstrated during the pilot test. Vacuum release valves are incorporated into the injection piping at the wellhead to protect against siphoning.

Historical data show low metals concentrations in groundwater. Arcadis does not expect significant inorganic solids precipitation in or near the injection wells. Before reinjection, process water will be partially reaerated to match the oxic conditions of the aquifer. During the pilot test, partial reaeration of process water occurred when cascading water into the effluent equalization tank. Infrastructure will be installed to accommodate future addition of effluent tank aeration using compressed air, if cascading water is ineffective at attaining desired dissolved oxygen levels before reinjection.

Periodic injection well redevelopment will be a necessary component of long-term O&M activities to address the potential for biofouling. Redevelopment will typically incorporate bailing, surging, and/or jetting. Addition of biocide and low pH solutions may be required to restore hydraulic capacity. While the addition of disinfection may not be necessary to extend the interval between injection well redevelopment events, the design includes flexibility for future addition of inline disinfection downstream of the injection pump to potentially reduce injection well O&M needs. The need for this addition will be evaluated during initial operation of the system.

8 ANCILLARY PROCESSES

8.1 System Pumps

Hydraulic analysis and head-loss calculations were conducted to size the pump and conveyance line diameters. Head loss for each pump and respective conveyance line was calculated using the Hazen-Williams equation, and the pumps were sized to operate at 45 hertz (Hz) under design conditions. The process pumps were sized based on conditions from each unit process. Characteristics include length of conveyance piping, material of construction, pipe diameter, discharge elevation, and head loss through respective unit processes. **Appendix A** provides the summary of hydraulic analysis calculations and system curve analysis for the various pumps.

Once inside the GWTP, water will be conveyed to unit processes using inline vertical multi-stage pumps. The decision to utilize inline vertical multi-stage pumps was based on minimizing the footprint and because no alignment is required after installation. All pumps, except for the sump pumps will be equipped with VFDs. All buried conveyance piping outside of the treatment building will be HDPE, and all conveyance piping inside the treatment building will be Schedule 80 PVC.

The sump pumps were sized at 100 gpm to convey process waste from a critical failure of either a process line or storage tank to the influent equalization tank during an emergency. They are also sized to sufficiently convey wash-down water from maintenance activities to the influent equalization tank. Sizing conditions are summarized in **Table 16**.

Table 16. Pump Sizing Design Parameters

Pump ID	Description	Pump Type	Design Flow (gpm)	Head (psi)	Frequency (Hz)	Horsepower	Basis
P-101	EW-1 Extraction Pump	Submersible Multistage	6	123	49	3.0	Based on remediation well design, head-loss calculations
P-102	EW-2 Extraction Pump	Submersible Multistage	20	140	50	7.5	Based on remediation well design, head-loss calculations
P-103	IW-1 Extraction Pump	Submersible Multistage	4	129	50	3.0	Based on remediation well design, head-loss calculations
P-104	MW-20 Extraction Pump	Submersible Multistage	5	175	53	1.5	Based on remediation well design, head-loss calculations
P-003	GWTP Sump Pump	Submersible	105	16	60	1.5	Based on collection and conveyance of failure of tank or process pipe, head-loss calculations
P-004	FBR Sump Pump	Submersible	120	12	60	1.5	Based on collection and conveyance of failure of tank or process pipe, head-loss calculations
P-201	FBR Transfer Pump	Inline Vertical Multistage	75	24	45	5.5	Based on system design flow rate, head-loss calculations
P-211	Backwash Decant Pump	Inline Vertical Multistage	100	30	54	5.5	Based on maximum number of daily backwash wastes, head-loss calculations

Pump ID	Description	Pump Type	Design Flow (gpm)	Head (psi)	Frequency (Hz)	Horsepower	Basis
P-301	Fluidization Pump	Closed-Coupled Centrifugal	550	15	60	7.5	Bioreactor media properties, vendor provided
P-302	Integral Spare Fluidization Pump	Closed-Coupled Centrifugal	550	15	60	7.5	Bioreactor media properties, vendor provided
P-401	Filtration Transfer Pump	Inline Vertical Multistage	75	40	48	7.5	Based on system design flow rate and maximum head-loss through unit processes, head-loss calculations
P-501	Clean Backwash Pump	Inline Vertical Multistage	75	52	53	7.5	Based on vendor provided backwash requirements for the multimedia filter and LGAC filter, head-loss calculations
P-701	Injection Pump	Inline Vertical Multistage	75	67	51	7.5	Based on system design flow rate, head-loss calculations

8.2 Backwash and Solids Management

The multi-media filtration unit process automatically backwashes when associated differential high-pressure alarms are triggered. Backwash intervals will correspond with vendor recommendations and will be verified during initial operation to verify adequate removal of TSS. Additionally, during LGAC initial startup and periodic changeout, fine particles will be manually backwashed from each LGAC vessel before placing them into operation. Backwash water will be discharged to the backwash conditioning cone bottom tank. After a minimum of 8 hours of settling time has passed, the backwash decant pump will discharge the supernatant to the influent equalization tank for reprocessing.

The multi-media filtration design and backwash frequency design parameters are provided in **Table 11**. The backwash conditioning tank and sludge volume design parameters are provided in **Table 17**.

Table 17. Backwash Conditioning Tank Sizing and Sludge Volume

Design Parameter	Steady State	Startup/Upset	Basis
Daily Backwash Volume	317 gpd	1,585 gpm	Calculation
TSS Loading to Multimedia Filtration	10 mg/L	50 mg/L	Vendor-Modeled, Pilot Test Results
Total Tank Volume	13,000 gallons	13,000 gallons	Sludge Disposal Interval, Nominal Tank Size
Tank Diameter	12 feet	12 feet	Vendor Specification
Tank Height	20 feet	20 feet	Vendor Specification, Distance from Bottom of Cone to Top of Tank
Sidewater Depth	7 feet	7 feet	Sludge Disposal Interval, Sludge Disposal Volume
Tank Freeboard	2 feet	2 feet	Accommodate Tank Instrumentation
Maximum Sludge Height	11 feet	11 feet	Total Tank Height Less Freeboard and Sidewater
Maximum Sludge Volume	5,386 gallons	5,386 gallons	Calculation
Decant Pump Suction Height	12 feet	12 feet	1 foot above Maximum Sludge Height
Backwash Solids Content	1,590 mg/L	1,590 mg/L	Calculation
Settled Sludge Content	0.5%	0.5%	Project Experience
Hydraulic Detention Time	17 days	3 days	Calculation
Settled Sludge Production Rate	101 gpd	504 gpd	Calculation

LGAC backwash events are expected to be infrequent and are designed to improve functionality by removing media fines and reducing high-flow channels. The LGAC backwash system is a manual process that utilizes the clean backwash pump (P-501) to convey backwash water from the injection equalization tank (T-700) to the LGAC unit(s), and discharge wastewater to the backwash conditioning tank (T-210). Manual valving is provided to allow backwash of individual vessels by the operator. To perform changeout of LGAC, the vessels will be accessed from the driveway on the southern side of the FBR pad through a 12-foot-wide swing gate as shown on Sheet S-3 of the Design Drawings.

Periodic measurements of sludge depth will occur within both the backwash conditioning and bioreactor effluent tank. If the maximum allowable sludge depth is exceeded, a decant cycle of the tank will be initiated and the sludge will be removed via a vacuum truck and properly disposed offsite. The backwash conditioning tank design incorporates consideration of locally available sludge disposal methods. The maximum sludge volume was designed to be approximately 5,000 gallons due to local sludge hauling capacities of approximately 5,000 gallons. Sludge disposal intervals will also be optimized to manage sludge off-gassing and sludge transportation cost.

Solids produced from the biological system will not have hazardous characteristics, and listed hazardous constituents are not present in the system influent. Therefore, solids will be disposed as non-hazardous waste. Due to low anticipated sludge production and sludge disposal costs, capital investment of a sludge reduction technology has been excluded from the design.

8.3 Flow Equalization

Flow equalization tanks are designed to control and dampen variable flow rates into and out of each major unit process. Flow equalization allows unit processes, such as the FBR, to maintain consistent loading and in turn reduces the fluctuation of biological nutrient demand. Equalization tanks are sized to handle multiple flow inputs/outputs and to allow sufficient residence time for automated cycles to return to steady state. Flow equalization will be provided in three separate locations in the treatment system, including influent equalization, FBR effluent equalization, and injection equalization.

Tank levels will be maintained with control loops informing pumps equipped with VFDs and continuous tank level measurement with submersible pressure transmitters. The control loop setpoints of the flow equalization tanks consist of high-high, high, low, and low-low levels. The operational volume of the flow equalization tanks is defined as the volume between the high and low levels. The high-high and low-low levels are defined as the critical levels that will interlock connected process equipment as a safety measure to prevent damage to equipment. High and low levels are established as approximately 1,000 gallons below the tank overflow and approximately 1,000 gallons above the discharge.

The flow equalization tanks are sized to result in a HRT of approximately 40 to 60 minutes based on the operational volume to address operational difficulties associated with changes in flow and/or concentration load. The flow equalization tank schedule is summarized in **Table 18**.

Table 18. Flow Equalization Design Parameters

Tanks ID	Description	Tank Type	Total Volume (gallons)	Operational Volume (gallons)	HRT (minutes)
T-200	Influent Equalization	Flat Bottom HDPE	3,900	2,000	57
T-400	FBR Effluent Equalization	Cone Bottom HDPE	3,000	1,500	43
T-700	Injection Equalization	Flat Bottom HDPE	3,900	2,000	57

8.4 Compressed Air

The current equipment compressed air demand at the Site is 48 cubic feet per minute (cfm). The plant demand was based on compressed air demand from pneumatic control valves (16 cfm), FBR skid (12 cfm), operational plant air (10 cfm), and future expansion (10 cfm). A 77 cfm/125 psi compressor has been specified and is coupled with a refrigerated air dryer and filters to provide clean, dry air to air-driven equipment. The compressed air system was designed to operate at or less than 65% uptime. Due to the elevated ambient temperature of the Site location and potential system upgrades, the system was upsized. Minimizing compressor runtime will reduce preemptive equipment wear and reduce noise output to neighboring properties. This allows the compressor to operate within its operating temperature during the elevated ambient temperatures experienced at the Site. Air demand calculations are provided in **Table 19**.

Table 19. Compressed Air Design Parameters

Air Demand	Design Value	Basis
Pneumatic Actuated Valves	16 cfm	Calculation (assume 1.0 cfm/valve)
FBR Requirement	12 cfm	Vendor Specification
Operation and Maintenance Plant Air	10 cfm	Project Experience
Future Expansion	10 cfm	For Future
Actual Compressed Air Requirement	48 cfm	Calculation
Design Compressor Uptime	65%	Project Experience, Vendor Recommended
Design Compressed Air Requirement	74 cfm	Calculation
Air Compressor Size	77 cfm	Nominal Size
Air Compressor Pressure	125 psi	Nominal Size

8.5 Instrumentation and Control

The treatment system will incorporate a programmable logic controller- (PLC-) based supervisory control and data acquisition (SCADA) system. The SCADA system will provide monitoring, supervisory control, alarming, and data collection. Plant and remediation well processes, including pump and flow control, and bioreactor unit process control, will be programmed for automatic operation, with the ability to have manual control when necessary. Process pumps, equipment, and plant instrumentation will be monitored via the SCADA system. All SCADA information will be displayed on a Human-Machine Interface (HMI) and will be accessible remotely by an operator via a secured remote connection via cellular service (or satellite if needed).

Alarm interlocks based on the monitored process variables will be incorporated into the PLC program to enable automatic shutdown of pertinent equipment due to alarm conditions (e.g., low discharge flow, high discharge pressure, tank low/high levels, motor overload, high-level vault alarms). Critical alarm conditions will deactivate the entire system, requiring an operator to review the alarm log to determine the cause for system shutdown. Depending on the alarm condition, the system may be reset remotely after acknowledging the alarm. The controls interlock table is included in **Appendix G**. Other alarm conditions may require onsite attention by the operator before the system can be reactivated. The HMI of the SCADA system will include sufficient access to modify system setpoints, parameters, alarms limits, and indication of associated process variables and instruments. These data will also be available to the SCADA system for remote control, alarming, trending, archiving, and other related tasks.

The bioreactor system will have a dedicated remote PLC, and will be integrated into the SCADA and main PLC system for monitoring, control, and data collection via network connection. The SCADA system will have full access to all data and controls associated with the bioreactor system. No other remote PLC panels are anticipated.

8.6 Heating, Ventilation, and Air Conditioning

Design of heating and cooling air conditioning units is based on the following:

- The volume of the pre-fabricated building's main process area is 60,000 ft^3, with 24-foot walls:
  - Must maintain a minimum temperature of 65 degrees Fahrenheit (°F) during wintertime operation, assuming lowest ambient temperature of 40°F.
  - Must maintain maximum temperature of 90°F during summertime operation, assuming a maximum ambient temp of 110°F.
  - Minimize power load requirements of air conditioning unit designed to maintain a maximum temperature during "off-peak" summertime operation (<105°F, humidity 25% to 50%) and peak summertime operation (105°F to 115°F, humidity 20% to 50%) to minimize power usage.
  - Motor heat source within the process area was originally based on a total of 60 horsepower inside the building. As design progressed, a significant percentage of the motor horsepower was ultimately located outside the building, thereby eliminating it from the cooling load of the building.
- The volume of the pre-fabricated building's control room is 5,000 ft^3 with 8-foot walls:

- Must maintain minimum temperature of 75°F during wintertime operation, assuming lowest ambient temperature of 40°F.
- Must maintain maximum temperature of 75°F during summertime operation, assuming maximum ambient temperature of 115°F.

Based on the constraints listed above, the building's main process area will be cooled with heat-pump-type air conditioning packaged unit designed to maintain a maximum temperature during peak summertime operation of approximately 90°F and a minimum temperature during the coolest wintertime operation of approximately 65°F throughout the space. An evaporative cooling unit was considered because it uses significantly less electrical power than the heat pump because no compressors are required, which results in lower operational costs during summertime operation than use of a heat pump alone for cooling. However, evaporative cooling was eliminated because it requires a potable water source and there is no potable water at the Site. To establish cooling capacity requirements within the process area, the design incorporated cooling to accommodate the internal motor heat gains of the building, lighting heat gains, as well as heat transfer through the building envelope. To adequately maintain a 90°F temperature in the process room of the building, a packaged heat-pump-type air conditioning unit with a 5-ton cooling capacity and a heating capacity of 15,100 btu/hour is required.

Based on the constraints listed above, the building's control room will be cooled with a packaged heat-pump-type air conditioning unit designed to maintain an average temperature of approximately 75°F throughout the space during peak summertime and coolest wintertime operation. The packaged heat-pump-type air conditioning unit for the control room will have a 2-ton cooling capacity and a 12,900 btu/hour heating capacity.

These units will be located on concrete pads outside the building, with ductwork penetrating the building, main process area, and control room to distribute air. Supply grilles will be mounted directly to the ductwork, with integral balancing dampers to achieve consistent airflow at each grille. A return grille will be located on the exterior wall closest to the packaged air conditioning unit, with ductwork routed outside the building to the inlet of the unit. An intake hood on the unit will allow for code-required minimum fresh ventilation air. Exterior ductwork will be insulated with fiberglass insulation and an exterior aluminum jacketing to shield the ductwork/insulation from weather. Interior ductwork will be exposed and uninsulated. All ductwork will utilize galvanized steel.

Electrical data for the above-mentioned units is provided on the design drawings.

Appendix H provides HVAC specifications.

8.7 Fire Protection

Fire protection will consist of fire extinguishers and will meet City of Phoenix and local fire department requirements. Fire protection design details will be obtained during the building permitting process.

8.8 Grounding

The treatment plant will have a grounding electrode system designed in accordance with the 2017 National Electrical Code (NEC) and the 2013 City of Phoenix Building Construction Code. The grounding

electrode system will include a grounding ring installed around the building, with connections to the main disconnect and building steel, including other available electrode as required by code.

A ground resistance test will be required to confirm that the grounding electrode system has been properly installed. The test will be required no sooner than 48 hours after a rainfall, and will provide confirmation that the correct maximum resistance value allowable by NEC of 25 ohms has been achieved.

8.9 Cathodic Protection

The design does not include underground tanks or other appurtenances that require cathodic protection. Underground water conveyance piping is HDPE, which does not require cathodic protection. Additionally, remediation wells are constructed of stainless steel screens and PVC casing and do not require cathodic protection to meet their expected operational lifecycle. Therefore, no cathodic protection is necessary for this design.

8.10 Secondary Containment

Systems will be constructed with secondary containment to reduce the risk of untreated groundwater or chemical release. All secondary containment will be designed to contain 110% of the largest volume tank of untreated water in the contained area, considering the volume occupied by equipment inside the containment. The calculations for the secondary containment of the main process area and the FBR area are summarized in **Table 20**.

Table 20. Secondary Containment Design Parameters

Design Parameter	Process Room	FBR Pad	Basis
Largest Untreated Tank	Influent Equalization Tank	Fluidized Bed Reactor	Evaluation
Largest Untreated Tank Volume	3,900 gallons	5,000 gallons	Vendor Specification
Required Containment Volume	4,290 gallons	5,500 gallons	110% of Largest Untreated Volume
Secondary Containment Area	1,285 ft^2	1,175 ft^2	Calculation
Required Secondary Containment Height	5.4 in	7.5 in	Calculation
Design Secondary Containment Height	6 in	8 in	Selected Based on Required Height
Design Secondary Containment Volume	4,806 gallons	5,859 gallons	Calculation

8.10.1 Building Foundation

Secondary containment will be constructed within the treatment plant building (i.e., Process Room) and around the exterior FBR pad. An 8-inch curb around the perimeter and a sump will be provided as part of the building foundation. Tanks and equipment will be installed on concrete housekeeping pads unless independent foundations are warranted based on equipment weight or geotechnical recommendations. The treatment plant building will consist of a pre-engineered metal building (PEMB) with rigid clear span frames at approximately 20-foot spacing. Foundations for the PEMB columns will be designed to bear on spread footings at least 18 inches below grade. The building slab on grade will be tied to the perimeter foundation wall to provide lateral restraint for the column foundations. A water-stop will be provided in the joint between the slab and walls to provide the required secondary containment. The following design criteria will be used:

- Strength of poured-in-place concrete will be a minimum of 4,500 psi at 28 days.
- Reinforcing steel will be deformed, Grade 60, conforming to ASTM International A615.
- Dead loads will consist of gravity loads induced by all structural elements, equipment, and piping.
- Roof live loads will be designed for a minimum live load of 20 pounds per square foot (psf).
- Concrete slab on grade and grating will be designed for a minimum live load of 300 psf.
- Wind loads will be determined in accordance with 2012 International Building Code requirements based on an ultimate design wind speed of 115 miles per hour, Exposure C, and Importance Factor of 1.0.

A block wall and security chain-link gates are anticipated to be incorporated into the foundation curbing of the exterior FBR pad unless spacing and operational constraints dictate otherwise. **Appendix I** provides structural specifications.

8.10.2 Chemical Storage

Water treatment chemicals used in the GWTP will be stored on individual secondary containment units designed to accommodate the full capacity of each tank and eliminate the possibility of mixing chemicals in the broader containment for the building. The containment units will be evaluated for compatibility with all chemicals in the plant, rather than only the chemical stored on a specific unit; incompatible chemicals will be segregated as necessary to avoid mixing in the event of a spill.

8.10.3 Floor Sumps

Floor sumps, including submersible pumps, are centrally located within the treatment building and FBR containment pad. If floor sumps are filled during O&M activities, automatic submersible pumps will discharge to the influent equalization tank.

8.11 Hazardous Area Classification Evaluation

Extracted and blended groundwater is anticipated to have a maximum perchlorate concentration of approximately 10 mg/L at the system influent manifold. Review of first quarter 2017 data indicates a site-wide maximum perchlorate concentration of approximately 70 mg/L in groundwater extracted from well IW-1 and a 1,4-dioxane concentration of approximately 12 µg/L in well MW-20. None of the COCs in extracted groundwater are considered flammable under National Fire Protection Association (NFPA) guidance (NFPA 497; NFPA 2017). Therefore, the presence of these constituents does not necessitate a hazardous classification regarding electrical installations in chemical process areas. Acetic acid will be delivered to the Site as a 50% solution, which also does not necessitate hazardous classification regarding electrical installations in chemical process areas. Therefore, no explosion-proofing of motors or equipment is required for this design.

8.12 Eyewash and Safety Shower

Eyewash stations and safety showers will be designed in accordance with United States Department of Labor, Occupational Safety and Health Administration 29 Code of Federal Regulation 1910.151(c). Eyewash and safety shower design specifications will adhere to the American National Standards Institute Z358.1-2014 for Emergency Eyewash and Shower Equipment. Because no municipal water supply is present at or near the Site, emergency eyewash and safety showers will be self-contained packages with integrated water storage and controls.

9 REFERENCES

Arcadis. 2014. Supplemental Groundwater Pre-Design Study Summary Report, Universal Propulsion Company, Inc., Phoenix, Arizona. December 19.

Arcadis. 2015. Corrective Measures Study Report, Universal Propulsion Company, Inc., Phoenix, Arizona. October 30.

Arcadis. 2016. Corrective Measures Implementation Work Plan, Universal Propulsion Company, Inc., Phoenix, Arizona. June.

Arcadis. 2017. Pilot Test Results Report, Former Universal Propulsion Company, Inc., Phoenix, Arizona. April.

Arcadis. 2017. 60% Design Report and Drawings, Former Universal Propulsion Company, Inc., Phoenix, Arizona. August 23.

NFPA. 2017. NFPA 497: Recommended Practice for the Classification of Flammable Liquids, Gases, or Vapors and of Hazardous (Classified) Locations for Electrical Installations in Chemical Process Areas.

FIGURES

\\Scottsdale-AZ\Project\UPCO\GIS\Projects\Semi-annual Monitoring Report 07-2016 to 01-2017\Figure 1 site location map Q1 2017.mxd 3/22/2017

Scale: 1" = 200 miles

LEGEND

★ Approximate site location

NOTES

· Basemap source: ESRI National Geographic World Map.

N

0 4 8 Miles

Scale: 1" = 8 mi

FORMER UNIVERSAL PROPULSION COMPANY, INC. FACILITY PHOENIX, ARIZONA

UPCO SITE MAP

ARCADIS

FIGURE 1

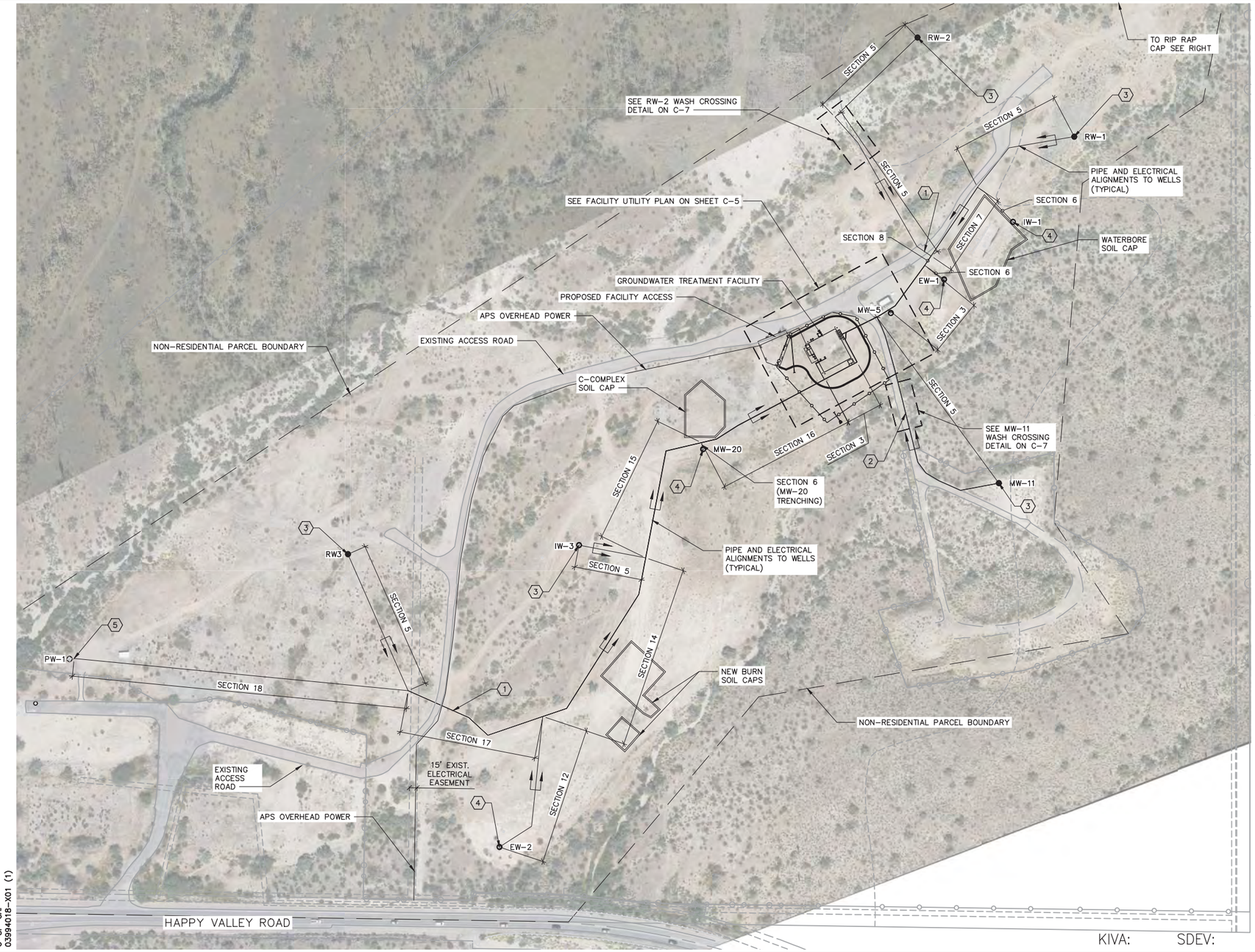

LEGEND

INJECTION WELLS:
RW-1
RW-2
RW-3
MW-5
MW-11
IW-3

EXTRACTION WELLS:
EW-1
EW-2
IW-1
MW-20
PW-1 – POTENTIAL FUTURE EXTRACTION WELL

CONSTRUCTION NOTES:

1. TRENCHES CROSSING EXISTING ASPHALT SHALL HAVE TYPE B, 'T-TOP' ASPHALT REPLACEMENT PER CITY OF PHOENIX STANDARD DETAIL P1200.
2. SAWCUT PAVEMENT TO CLEAN EDGE AND REMOVE (MINIMUM 2-FT) IN PREPARATION FOR PIPE TRENCH. ASPHALT REPLACEMENT SHALL BE TYPE B – 'T-TOP' (HALF SECTION) PER CITY OF PHOENIX STANDARD DETAIL P1200.
3. SEE DETAILS ON SHEET C-9 FOR INJECTION WELL VAULT DETAILS.
4. SEE DETAILS ON SHEET C-10 FOR EXTRACTION WELL VAULT DETAILS.
5. TERMINATE HDPE PIPES JUST OUTSIDE OF EXISTING WELL HEAD AND INSTALL HDPE PIPE CAPS.

NOTES:

1. SEE SHEETS C-6 AND C-7 FOR TRENCH DETAILS FOR EACH TRENCH SECTION INDICATED ON THIS SHEET.
2. EACH CONVEYANCE LINE SHALL BE DISTINGUISHED BY UNIQUE COLOR STRIPING OR TAPE FOR IDENTIFICATION DURING CONSTRUCTION OR FUTURE "TIE-IN" ACTIVITIES.
3. ALL PIPE FOR EXTRACTION AND INJECTION WELLS SHALL BE HDPE SDR 11 IN CONFORMANCE WITH ASTM D3035/AWWA C901 AND NSF 61.

KIVA: SDEV: NOI:

DRAFT

CITY: PHOENIX, AZ DIV/GROUP: ENVCAD DB: ENVCAD
D:\acad\proj\3994003 – UPCO GW\Design Drawings\90%\Civil\Sheets\C-02.dwg LAYOUT: C-2 SAVED: 11/29/2017 2:36 PM
BY: PRIOR, JENA PAGESETUP: ---- PLOTSTYLETABLE: AIA STANDARD.CTB PLOTTED: 11/29/2017 2:36 PM ACADVER: 20.1S (LMS TECH)
XREFS: IMAGES: PROJECTNAME: ----
X-TITL_Blocker02 UPCO_site_12-29-2015_ground.jpg
3994003CSHAPPY VALLEY AT CENTRAL ORTHO 1.tif
03994018-HAPPY VALLEY AT CENTRAL ORTHO 2.tif
Aerial Mapping HAPPY VALLEY AT CENTRAL ORTHO 3.tif
X-REF
03994018-X00
V-SURV-BNDY 01
C-SP-CAP
03994018-X01 (1)

SCALE(S) TAG SUBMITTED

THIS BAR REPRESENTS ONE INCH ON THE ORIGINAL DRAWING: USE TO VERIFY FIGURE REPRODUCTION SCALE

No.	Date	Revisions	By	Ckd

THIS DRAWING IS THE PROPERTY OF THE ARCADIS ENTITY IDENTIFIED IN THE TITLE BLOCK AND MAY NOT BE REUSED OR ALTERED IN WHOLE OR IN PART WITHOUT THE EXPRESS WRITTEN PERMISSION OF SAME.

Professional Engineer's Name		
Professional Engineer's No.		
State	Date Signed	Project Mgr.
Designed by	Drawn by	Checked by

ARCADIS U.S., INC.

FORMER UNIVERSAL PROPULSION COMPANY, INC. FACILITY • PHOENIX, ARIZONA
90% DESIGN

OVERALL PROJECT SITE PLAN

CML

ARCADIS
14201 N 87TH STREET
SUITE 135
SCOTTSDALE, AZ
TEL. 480.905.9311

ARCADIS Project No.
03994018.0023.00001

Date
NOVEMBER 2017

FIGURE 2

APPENDIX A

Hydraulic Calculations and System Curve Analysis

SYSTEM HEAD CURVE CALCULATIONS

PROJECT:	Former Universal Propulsion Company, Inc. Facility
JOB NO.:	
SYSTEM:	P-101 System Curve EW-01 Submersible Extraction Pump

ARCADIS, Inc.

ARCADIS Design & Consultancy for natural and built assets

BY:	Jake Schill
DATE:	10.5.17
FILE:	
CHECKED BY:	JT

DISC ELEV	1601.40	PUMP CENTERLINE	
SUCT ELEV	1322.00	ELEV.	1292.00
STATIC SUCTION HEAD:		30.00 ft.	

TOTAL FLOW (gpm) 0	0	6	10	14	18	25
(MGD)	0.00	0.01	0.01	0.02	0.03	0.04
STATIC HEAD:	279.40	279.40	279.40	279.40	279.40	279.40
Optional: PUMP HEAD , ft.						

SUCTION ENTRANCE							SEGMENT FLOW (gpm)	0	0	6	10	14	18	25
							FLOW RATIO:	1.000						
DIAMETER (in):		1.48	LENGTH:	5 ft.	C:	130	VEL fps		0.00	1.13	1.88	2.63	3.38	4.69
FE1	Entrance Loss	1	K =	0.50			V HD ft		0.00	0.02	0.05	0.11	0.18	0.34
			K =				H/1000 ft		0.00	5.28	13.59	25.33	40.35	74.13
			K =				HD L ft		0.00	0.04	0.10	0.18	0.29	0.54
			K =		TOT K=	0.50	ACCUM H ft		279.40	279.44	279.50	279.58	279.69	279.94

Pump to Vault Exit							SEGMENT FLOW (gpm)		0	6	10	14	18	25
							FLOW RATIO:	1.000						
DIAMETER (in):		1.48	LENGTH:	300 ft.	C:	130	VEL fps		0.00	1.13	1.88	2.63	3.38	4.69
FE2	Bend 90	4	K =	0.57		0	V HD ft		0.00	0.02	0.05	0.11	0.18	0.34
FE3	Ball Valve	2	K =	0.06			H/1000 ft		0.00	5.28	13.59	25.33	40.35	74.13
FE4	Expansion (1-1/2in. x 2in.)	1	K =	0.15			HD L ft		0.00	1.71	4.42	8.28	13.23	24.41
FE5	Swing Check Valve	2		1.90	TOT K=	6.35	ACCUM H ft		279.40	281.14	283.92	287.86	292.92	304.35

Vault Exit to Manifold							SEGMENT FLOW (gpm)		0	6	10	14	18	25
							FLOW RATIO:	1.000						
DIAMETER (in):		1.92	LENGTH:	275 ft.	C:	130	VEL fps		0.00	0.67	1.11	1.56	2.00	2.78
FE6	Bend 90	5	K =	0.57			V HD ft		0.00	0.01	0.02	0.04	0.06	0.12
FE7	Reducer (2in. x 1in.)	1	K =	0.10			H/1000 ft		0.00	1.48	3.80	7.09	11.29	20.75
			K =				HD L ft		0.00	0.43	1.10	2.06	3.29	6.06
			K =		TOT K=	2.95	ACCUM H ft		279.40	281.57	285.02	289.92	296.21	310.41

Manifold Leg							SEGMENT FLOW (gpm)		0	6	10	14	18	25
							FLOW RATIO:	1.000						
DIAMETER (in)		0.94	LENGTH:	5 ft.	C:	130	VEL fps		0.00	2.80	4.66	6.53	8.39	11.66
FE9	Flowmeter	1	K =	1.00			V HD ft		0.00	0.12	0.34	0.66	1.09	2.11
FE10	Diaphragm Valve	1	K =	5.00			H/1000 ft		0.00	48.49	124.88	232.88	370.89	681.48
FE11	Expansion (1in x 2in)	1	K =	0.15			HD L ft		0.00	0.99	2.70	5.23	8.58	16.39
			K =		TOT K=	6.15	ACCUM H ft		279.40	282.56	287.72	295.16	304.79	326.79

Manifold Header to Influent Tank							SEGMENT FLOW (gpm)		75	75	75	75	75	75
							FLOW RATIO:	1.000						
DIAMETER (in)		2.86	LENGTH:	20 ft.	C:	130								
FE12	Bend 90	2	K =	0.57										
FE13	Butterfly Valve	1	K =	0.86										
FE14	Ball Valve	1	K =	0.06										
FE15	Swing Check Valve	1	K =	1.90			VEL fps		3.74	3.74	3.74	3.74	3.74	3.74
FE16	Expansion (2in x 6in)	1	K =	0.15			V HD ft		0.22	0.22	0.22	0.22	0.22	0.22
FE17	Reducer (6in x 3in)	1	K =	0.10			H/1000 ft		22.46	22.46	22.46	22.46	22.46	22.46
FE18	Bend 90	3	K =	0.57			HD L ft		1.95	1.95	1.95	1.95	1.95	1.95
FE19	Exit	1	K =	1.00	TOT K=	6.92	ACCUM H ft		281.35	284.51	289.67	297.10	306.74	328.74

TDH at Design Flow Rate

Notes:

- Finished floor elevation of treatment building and FBR pad = 1587.50'
- Equipment pad elevation within treatment building = 1588.0'
- Tank and Equipment data is included in Appendix C
- See Tank Nozzle Schedule (M-8) for DISC ELEV
- SUCT ELEV assumes maximum of 25' below static groundwater elevation at EW-01 (1347')
- PUMP CENTERLINE ELEV assumes extraction pump deployed at bottom of well screen

EW-01 Pumping System Head Curve Analysis

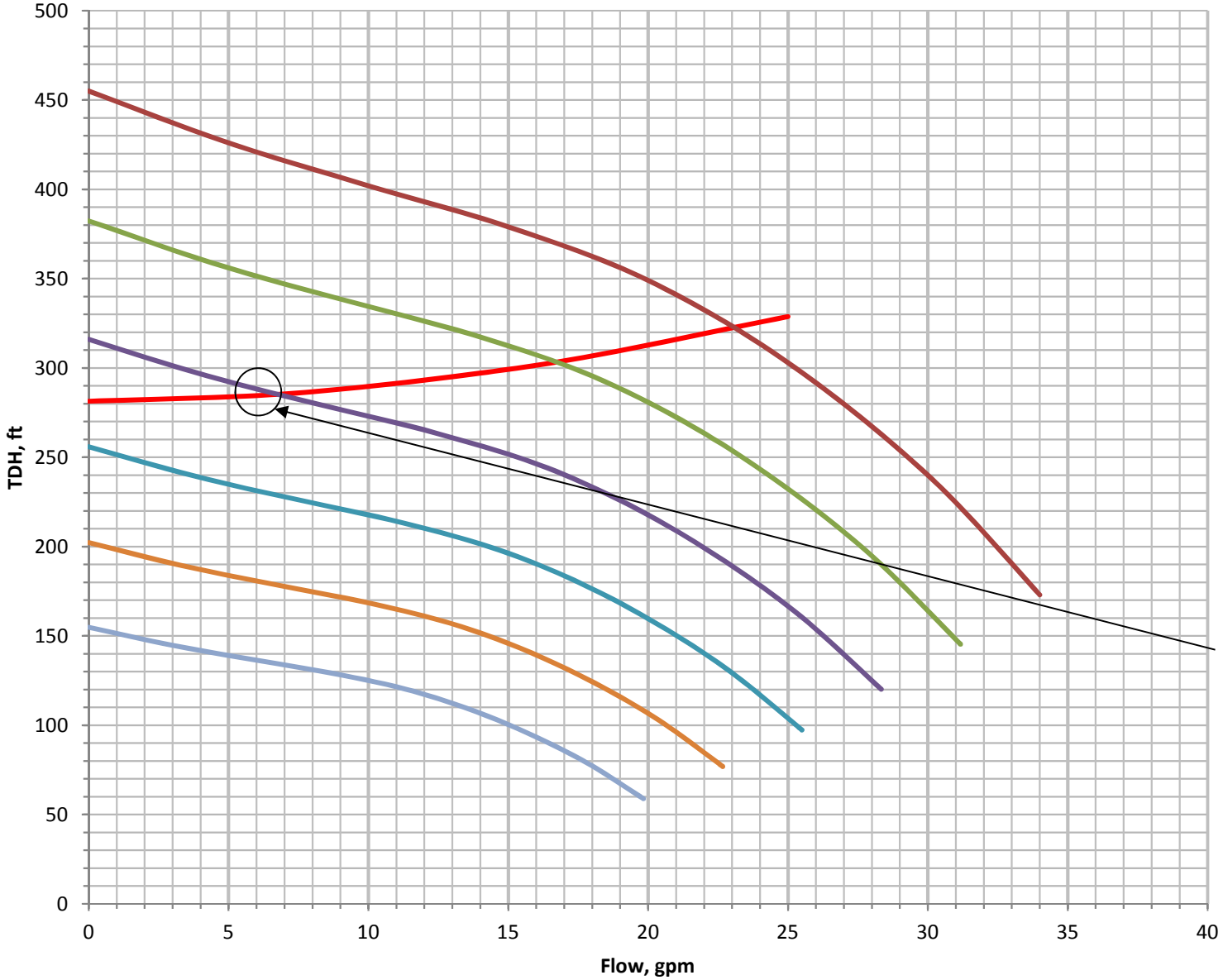

Pump Model:
Grundfos SP
25S30-15
3.0 hp, 460V, 3 ϕ, 60 hz

Operating Point:
6 gpm @ 123 psi

SYSTEM HEAD CURVE CALCULATIONS

PROJECT:	Former Universal Propulsion Company, Inc. Facility
JOB NO.:	
SYSTEM:	P-102 System Curve EW-02 Submersible Extraction Pump

ARCADIS, Inc.

ARCADIS Design & Consultancy for natural and built assets

BY:	Jake Schill
DATE:	10.5.17
FILE:	
CHECKED BY:	JT

DISC ELEV	1601.40	PUMP CENTERLINE	
SUCT ELEV	1327.00	ELEV.	1252.00
STATIC SUCTION HEAD:		75.00 ft.	

TOTAL FLOW (gpm) 0	0	20	25	30	35	45
(MGD)	0.00	0.03	0.04	0.04	0.05	0.06
STATIC HEAD:	274.40	274.40	274.40	274.40	274.40	274.40
Optional: PUMP HEAD , ft.						

SUCTION ENTRANCE													
							SEGMENT FLOW (gpm)	0	0	20	25	30	35	45
							FLOW RATIO:	1.000						
DIAMETER (in):		1.48	LENGTH:	5	ft.	C: 130	VEL fps		0.00	3.75	4.69	5.63	6.56	8.44
FE1	Entrance Loss	1	K =	0.50			V HD ft		0.00	0.22	0.34	0.49	0.67	1.11
			K =				H/1000 ft		0.00	49.04	74.13	103.91	138.24	220.17
			K =				HD L ft		0.00	0.35	0.54	0.77	1.03	1.65
			K =		TOT K=	0.50	ACCUM H ft		274.40	274.75	274.94	275.17	275.43	276.05

Pump to Vault Exit													
							SEGMENT FLOW (gpm)		0	20	25	30	35	45
							FLOW RATIO:	1.000						
DIAMETER (in):		1.48	LENGTH:	305	ft.	C: 130	VEL fps		0.00	3.75	4.69	5.63	6.56	8.44
FE3	Bend 90	4	K =	0.57		0	V HD ft		0.00	0.22	0.34	0.49	0.67	1.11
FE4	Ball Valve	2	K =	0.06			H/1000 ft		0.00	49.04	74.13	103.91	138.24	220.17
FE5	Expansion (1-1/2in. x 2in.)	1	K =	0.15			HD L ft		0.00	15.93	24.13	33.88	45.14	72.07
FE6	Swing Check Valve	1		1.90	TOT K=	4.45	ACCUM H ft		274.40	290.68	299.07	309.04	320.57	348.13

Vault Exit to Manifold													
							SEGMENT FLOW (gpm)		0	20	25	30	35	45
							FLOW RATIO:	1.000						
DIAMETER (in):		1.92	LENGTH:	1420	ft.	C: 130	VEL fps		0.00	2.22	2.78	3.34	3.89	5.00
FE7	Bend 90	11	K =	0.57			V HD ft		0.00	0.08	0.12	0.17	0.24	0.39
FE8	Reducer (2in. x 1in.)	1	K =	0.10			H/1000 ft		0.00	13.73	20.75	29.09	38.70	61.63
			K =				HD L ft		0.00	19.98	30.23	42.40	56.44	89.99
			K =		TOT K=	6.37	ACCUM H ft		274.40	310.66	329.30	351.45	377.01	438.11

Manifold Leg													
							SEGMENT FLOW (gpm)		0	20	25	30	35	45
							FLOW RATIO:	1.000						
DIAMETER (in)		0.94	LENGTH:	5	ft.	C: 130	VEL fps		0.00	9.33	11.66	13.99	16.32	20.98
FE9	Flowmeter	1	K =	1.00			V HD ft		0.00	1.35	2.11	3.04	4.14	6.84
FE10	Diaphragm Valve	1	K =	5.00			H/1000 ft		0.00	450.80	681.48	955.19	1270.77	2023.92
FE11	Expansion (1in x 2in)	1	K =	0.15			HD L ft		0.00	10.56	16.39	23.46	31.79	52.17
			K =		TOT K=	6.15	ACCUM H ft		274.40	321.22	345.69	374.91	408.80	490.28

Manifold Header to Influent Tank													
							SEGMENT FLOW (gpm)		75	75	75	75	75	75
							FLOW RATIO:	1.000						
DIAMETER (in)		2.86	LENGTH:	20	ft.	C: 130								
FE12	Bend 90	2	K =	0.57										
FE13	Butterfly Valve	1	K =	0.86										
FE14	Ball Valve	1	K =	0.06										
FE15	Swing Check Valve	1	K =	1.90			VEL fps		3.74	3.74	3.74	3.74	3.74	3.74
FE16	Expansion (2in x 6in)	1	K =	0.15			V HD ft		0.22	0.22	0.22	0.22	0.22	0.22
FE17	Reducer (6in x 3in)	1	K =	0.10			H/1000 ft		22.46	22.46	22.46	22.46	22.46	22.46
FE18	Bend 90	3	K =	0.57			HD L ft		1.95	1.95	1.95	1.95	1.95	1.95
FE19	Exit	1	K =	1.00	TOT K=	6.92	ACCUM H ft		276.35	323.17	347.64	376.86	410.75	492.23

TDH at Design Flow Rate

Notes:

- Finished floor elevation of treatment building and FBR pad = 1587.50'
- Equipment pad elevation within treatment building = 1588.0'
- Tank and Equipment data is included in Appendix C
- See Tank Nozzle Schedule (IM-8) for DISC ELEV.
- SUCT ELEV assumes maximum of 20' below static groundwater elevation at EW-02 (1347')
- PUMP CENTERLINE ELEV assumes extraction pump deployed at bottom of well screen

EW-02 Pumping System Head Curve Analysis

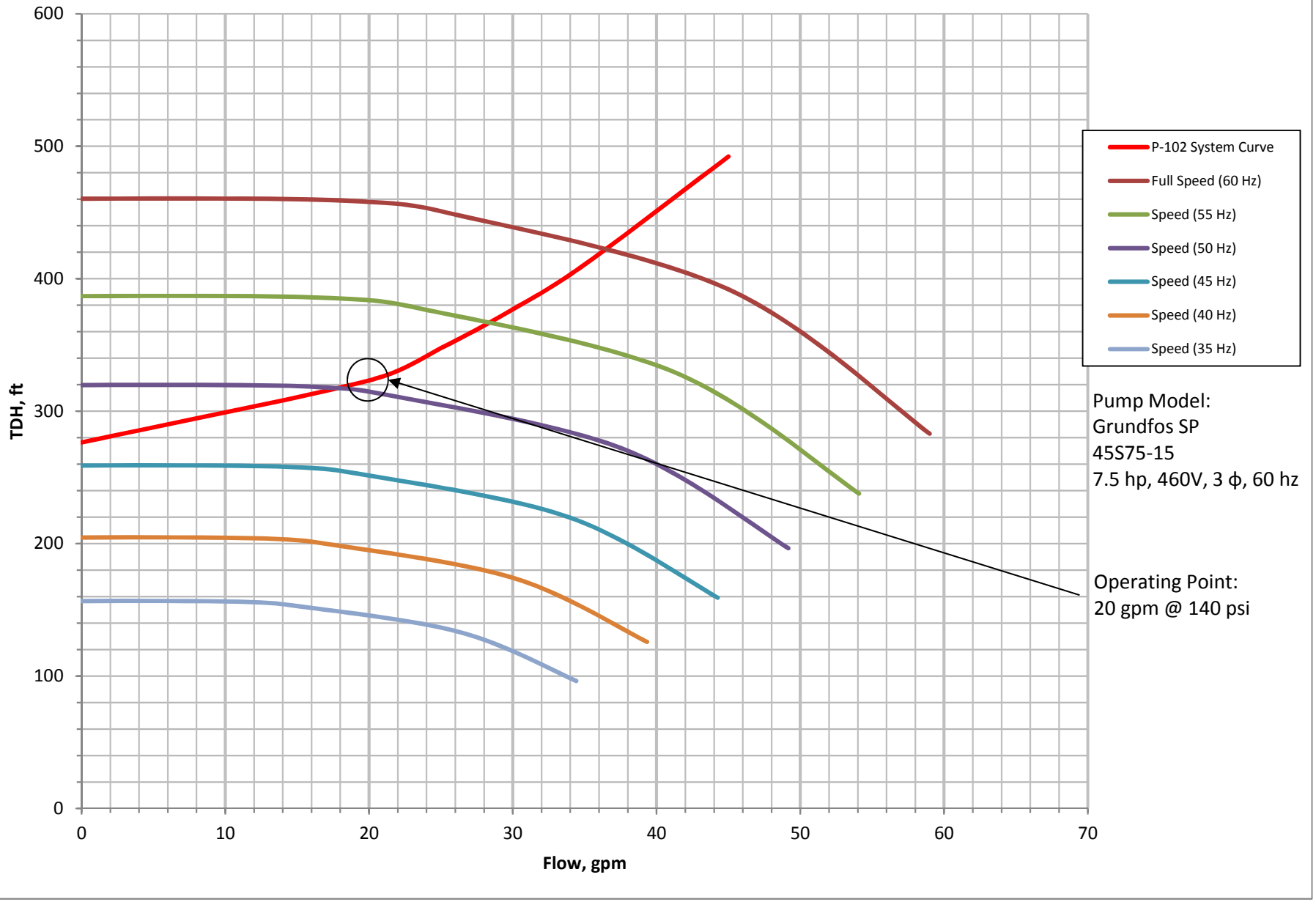

SYSTEM HEAD CURVE CALCULATIONS

PROJECT:	Former Universal Propulsion Company, Inc. Facility
JOB NO.:	
SYSTEM:	P-103 System Curve IW-01 Submersible Extraction Pump

ARCADIS, Inc.

BY:	Jake Schill
DATE:	10.5.17
FILE:	
CHECKED BY:	JT

DISC ELEV	1601.40	PUMP CENTERLINE	
SUCT ELEV	1307.00	ELEV.	1261.00
STATIC SUCTION HEAD:		46.00	ft.

TOTAL FLOW (gpm) 0	0	4	10	14	18	25
(MGD)	0.00	0.01	0.01	0.02	0.03	0.04
STATIC HEAD:	294.40	294.40	294.40	294.40	294.40	294.40
Optional: PUMP HEAD , ft.						

SUCTION ENTRANCE							SEGMENT FLOW (gpm)	0	0	4	10	14	18	25
							FLOW RATIO:	1.000						
DIAMETER (in):		1.48	LENGTH:	5	ft. C:	130	VEL fps		0.00	0.75	1.88	2.63	3.38	4.69
FE1	Entrance Loss	1	K =	0.50			V HD ft		0.00	0.01	0.05	0.11	0.18	0.34
			K =				H/1000 ft		0.00	2.49	13.59	25.33	40.35	74.13
			K =				HD L ft		0.00	0.02	0.10	0.18	0.29	0.54
			K =		TOT K=	0.50	ACCUM H ft		294.40	294.42	294.50	294.58	294.69	294.94

Pump toVault Exit							SEGMENT FLOW (gpm)		0	4	10	14	18	25
							FLOW RATIO:	1.000						
DIAMETER (in):		1.48	LENGTH:	295	ft. C:	130	VEL fps		0.00	0.75	1.88	2.63	3.38	4.69
FE3	Bend 90	4	K =	0.57		0	V HD ft		0.00	0.01	0.05	0.11	0.18	0.34
FE4	Ball Valve	2	K =	0.06			H/1000 ft		0.00	2.49	13.59	25.33	40.35	74.13
FE5	Expansion (1-1/2in. x 2in.)	1	K =	0.15			HD L ft		0.00	0.77	4.25	7.95	12.69	23.39
FE6	Swing Check Valve	1		1.90	TOT K=	4.45	ACCUM H ft		294.40	295.19	298.75	302.53	307.38	318.33

Vault Exit to Manifold							SEGMENT FLOW (gpm)		0	4	10	14	18	25
							FLOW RATIO:	1.000						
DIAMETER (in):		1.92	LENGTH:	600	ft. C:	130	VEL fps		0.00	0.44	1.11	1.56	2.00	2.78
FE7	Bend 90	4	K =	0.57			V HD ft		0.00	0.00	0.02	0.04	0.06	0.12
FE8	Reducer (2in. x 1in.)	1	K =	0.10			H/1000 ft		0.00	0.70	3.80	7.09	11.29	20.75
			K =				HD L ft		0.00	0.43	2.33	4.34	6.92	12.74
			K =		TOT K=	2.38	ACCUM H ft		294.40	295.62	301.07	306.87	314.30	331.07

Manifold Leg							SEGMENT FLOW (gpm)		0	4	10	14	18	25
							FLOW RATIO:	1.000						
DIAMETER (in)		0.94	LENGTH:	5	ft. C:	130	VEL fps		0.00	1.87	4.66	6.53	8.39	11.66
FE10	Flowmeter	1	K =	1.00			V HD ft		0.00	0.05	0.34	0.66	1.09	2.11
FE11	Diaphragm Valve	1	K =	5.00			H/1000 ft		0.00	22.89	124.88	232.88	370.89	681.48
FE12	Expansion (1in x 2in)	1	K =	0.15			HD L ft		0.00	0.45	2.70	5.23	8.58	16.39
			K =		TOT K=	6.15	ACCUM H ft		294.40	296.06	303.77	312.11	322.89	347.45

Manifold Headloss to Influent Tank							SEGMENT FLOW (gpm)		75	75	75	75	75	75
							FLOW RATIO:	1.000						
DIAMETER (in)		2.86	LENGTH:	20	ft. C:	130	VEL fps		3.74	3.74	3.74	3.74	3.74	3.74
FE13	Bend 90	2	K =	0.57										
FE14	Butterfly Valve	1	K =	0.86										
FE15	Ball Valve	1	K =	0.06										
FE16	Swing Check Valve	1	K =	1.90										
FE14	Expansion (2in x 6in)	1	K =	0.15			V HD ft		0.22	0.22	0.22	0.22	0.22	0.22
FE15	Reducer (6in x 3in)	1	K =	0.10			H/1000 ft		22.46	22.46	22.46	22.46	22.46	22.46
FE16	Bend 90	3	K =	0.57			HD L ft		1.95	1.95	1.95	1.95	1.95	1.95
FE17	Exit	1	K =	1.00	TOT K=	6.92	ACCUM H ft		296.35	298.01	305.72	314.06	324.83	349.40

TDH at Design Flow Rate

Notes:

- Finished floor elevation of treatment building and FBR pad = 1587.50'
- Equipment pad elevation within treatment building = 1588.0'
- Tank and Equipment data is included in Appendix C
- See Tank Nozzle Schedule (M-8) for DISC ELEV
- SUCT ELEV assumes maximum of 40' below static groundwater elevation at IW-01 (1347')
- PUMP CENTERLINE ELEV assumes extraction pump deployed at bottom of well screen

IW-01 Pumping System Head Curve Analysis

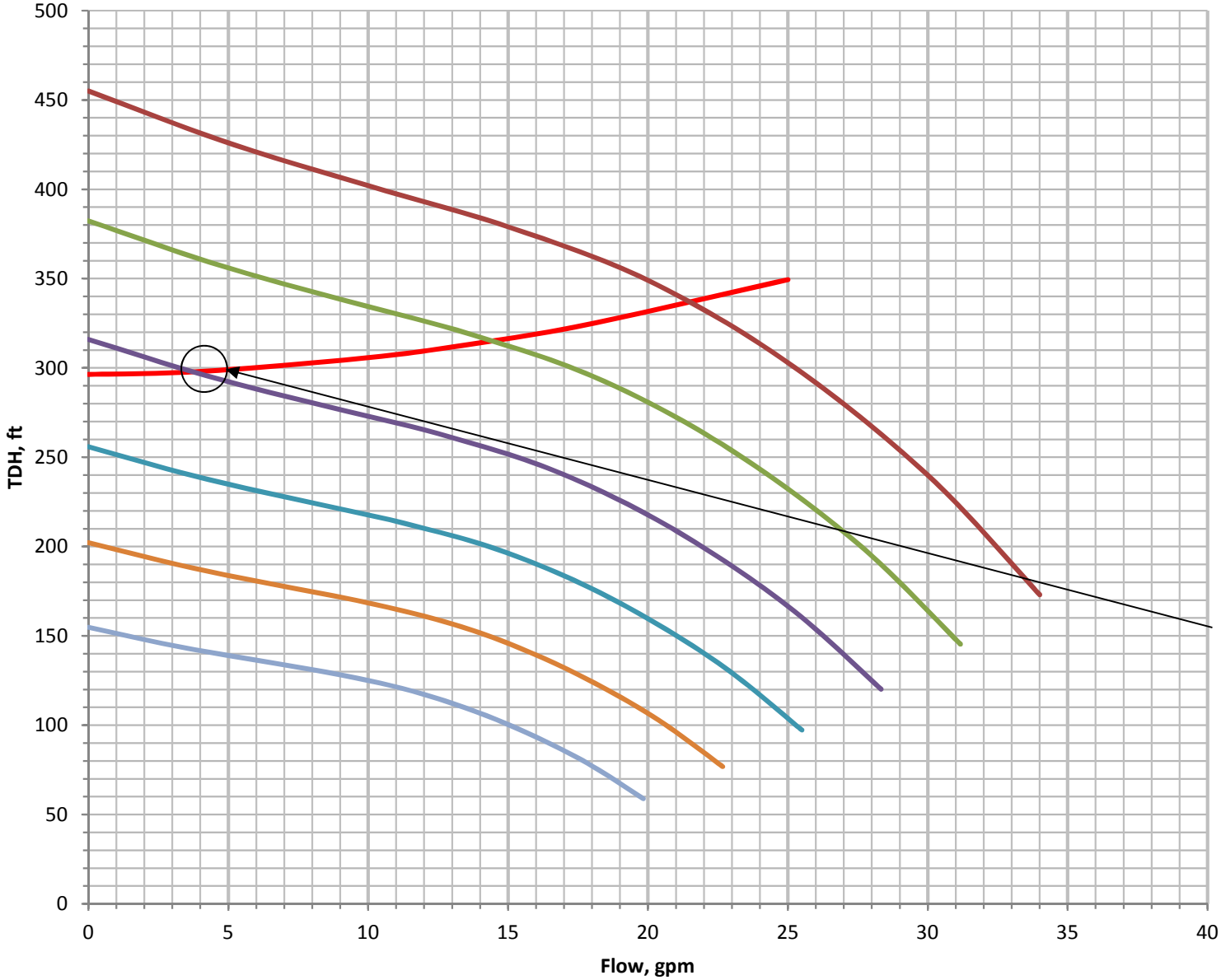

Pump Model:
Grundfos SP
25S30-15
3.0 hp, 460V, 3 ϕ, 60 hz

Operating Point:
4 gpm @ 129 psi

SYSTEM HEAD CURVE CALCULATIONS

PROJECT:	Former Universal Propulsion Company, Inc. Facility
JOB NO.:	
SYSTEM:	P-104 System Curve MW-20 Submersible Extraction Pump

ARCADIS, Inc.

ARCADIS Design & Consultancy for natural and built assets

BY:	Jake Schill
DATE:	10.5.17
FILE:	
CHECKED BY:	JT

DISC ELEV	1601.40	PUMP CENTERLINE	
SUCT ELEV	1322.00	ELEV.	1292.00
STATIC SUCTION HEAD:		30.00	ft.

TOTAL FLOW (gpm) 0	0	5	6	8	10	14
(MGD)	0.00	0.01	0.01	0.01	0.01	0.02
STATIC HEAD:	279.40	279.40	279.40	279.40	279.40	279.40
Optional: PUMP HEAD , ft.						

SUCTION ENTRANCE							SEGMENT FLOW (gpm) 0	0	5	6	8	10	14
							FLOW RATIO: 1.000						
DIAMETER (in):		1.48	LENGTH:	5 ft.	C:	130	VEL fps	0.00	0.94	1.13	1.50	1.88	2.63
FE1	Entrance Loss	1	K =	0.50			V HD ft	0.00	0.01	0.02	0.03	0.05	0.11
			K =				H/1000 ft	0.00	3.76	5.28	8.99	13.59	25.33
			K =				HD L ft	0.00	0.03	0.04	0.06	0.10	0.18
			K =		TOT K=	0.50	ACCUM H ft	279.40	279.43	279.44	279.46	279.50	279.58

Pump to Vault Exit							SEGMENT FLOW (gpm)	0	5	6	8	10	14
							FLOW RATIO: 1.000						
DIAMETER (in):		1.48	LENGTH:	285 ft.	C:	130	VEL fps	0.00	0.94	1.13	1.50	1.88	2.63
FE3	Bend 90	4	K =	0.57		0	V HD ft	0.00	0.01	0.02	0.03	0.05	0.11
FE4	Ball Valve	2	K =	0.06			H/1000 ft	0.00	3.76	5.28	8.99	13.59	25.33
FE5	Expansion (1-1/2in. x 2in.)	1	K =	0.15			HD L ft	0.00	1.13	1.59	2.72	4.11	7.70
FE6	Swing Check Valve	1		1.90	TOT K=	4.45	ACCUM H ft	279.40	280.56	281.03	282.18	283.61	287.28

Vault Exit to Manifold							SEGMENT FLOW (gpm)	0	5	6	8	10	14
							FLOW RATIO: 1.000						
DIAMETER (in):		1.92	LENGTH:	580 ft.	C:	130	VEL fps	0.00	0.56	0.67	0.89	1.11	1.56
FE7	Bend 90	5	K =	0.57			V HD ft	0.00	0.00	0.01	0.01	0.02	0.04
FE8	Reducer (2in. x 1in.)	1	K =	0.10			H/1000 ft	0.00	1.05	1.48	2.52	3.80	7.09
			K =				HD L ft	0.00	0.63	0.88	1.50	2.26	4.22
			K =		TOT K=	2.95	ACCUM H ft	279.40	281.18	281.90	283.67	285.87	291.50

Manifold Leg							SEGMENT FLOW (gpm)	0	5	6	8	10	14
							FLOW RATIO: 1.000						
DIAMETER (in)		0.94	LENGTH:	5 ft.	C:	130	VEL fps	0.00	2.33	2.80	3.73	4.66	6.53
FE9	Flowmeter	1	K =	1.00			V HD ft	0.00	0.08	0.12	0.22	0.34	0.66
FE10	Diaphragm Valve	1	K =	5.00			H/1000 ft	0.00	34.60	48.49	82.61	124.88	232.88
FE11	Expansion (1in x 2in)	1	K =	0.15			HD L ft	0.00	0.69	0.99	1.74	2.70	5.23
			K =		TOT K=	6.15	ACCUM H ft	279.40	281.88	282.89	285.42	288.57	296.73

Vessels to Influent Tank							SEGMENT FLOW (gpm)	0	5	6	8	10	14
							FLOW RATIO: 1.000						
DIAMETER (in)		1.92	LENGTH:	150 ft.	C:	130							
FE12	Bend 90	10	K =	0.57									
FE13	Butterfly Valve	1	K =	0.86									
FE14	Ball Valve	18	K =	0.06			VEL fps	0.00	0.55	0.66	0.89	1.11	1.55
FE15	GAC Vessel Headloss	1	K =	0.00			V HD ft	0.00	0.00	0.01	0.01	0.02	0.04
FE16	Bag Filter Headloss	1	K =	0.00			H/1000 ft	0.00	1.05	1.47	2.50	3.77	7.04
FE17	Bend 90	8	K =	0.57			HD L ft	92.40	92.62	92.71	92.94	93.22	93.95
FE18	Exit	1	K =	1.00	TOT K=	13.20	ACCUM H ft	371.80	374.50	375.60	378.35	381.79	390.68
TDH at Design Flow Rate													

Notes:

- Finished floor elevation of treatment building and FBR pad = 1587.50'
- Equipment pad elevation within treatment building = 1588.0'
- Tank and Equipment data is included in Appendix C
- See Tank Nozzle Schedule (M-8) for DISC ELEV
- SUCT ELEV assumes maximum of 40' below static groundwater elevation at IW-01 (1347')
- PUMP CENTERLINE ELEV assumes extraction pump deployed at bottom of well screen

MW-20 Pumping System Head Curve Analysis

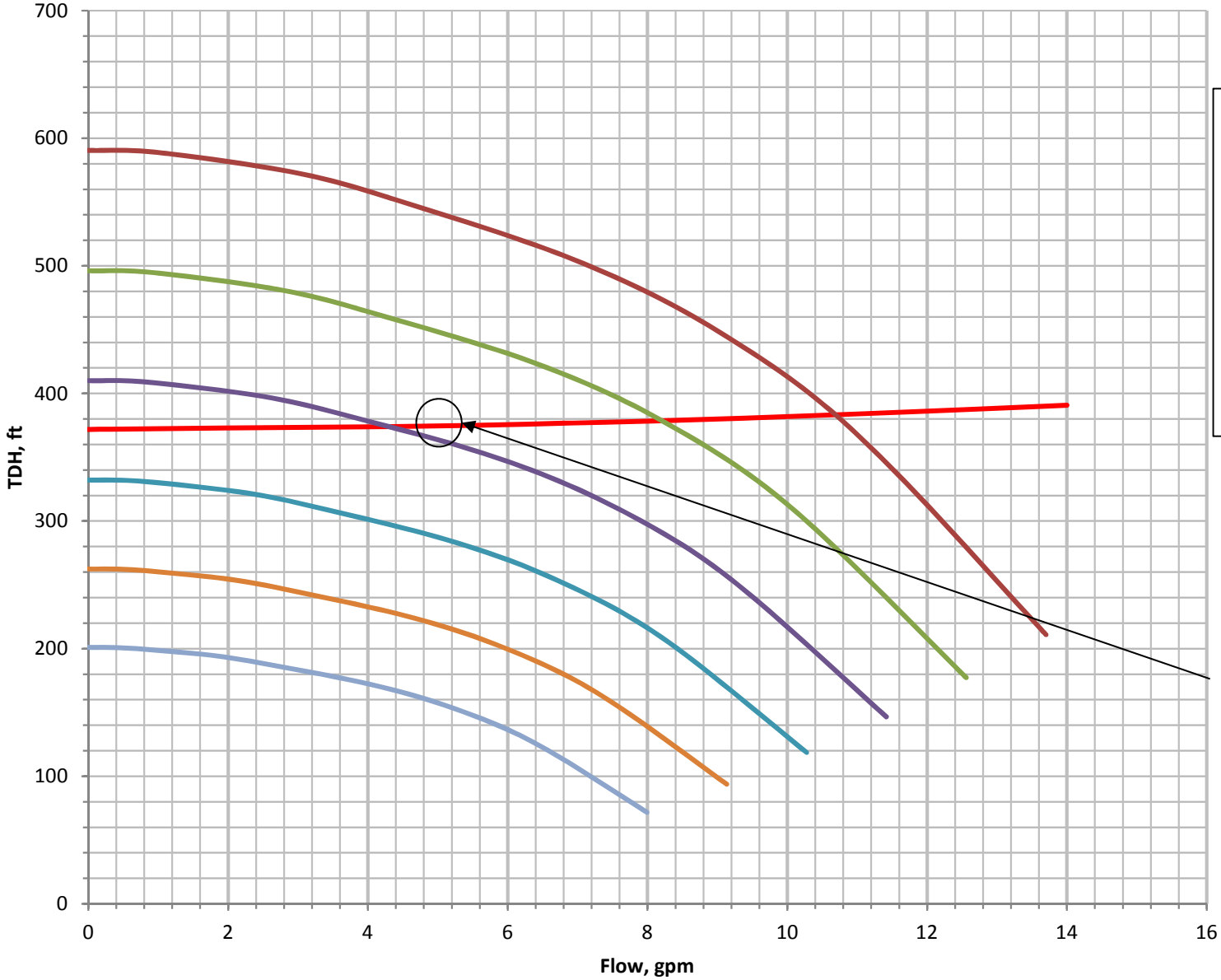

Pump Model:
Grundfos SP
10S15-21
1.5 hp, 460V, 3 ϕ, 60 hz

Operating Point:
5 gpm @ 162 psi

SYSTEM HEAD CURVE CALCULATIONS

PROJECT:	Former Universal Propulsion Company, Inc. Facility
JOB NO.:	
SYSTEM:	P-003 System Curve
	Treatment Building Submersible Sump Pump

ARCADIS, Inc.

BY:	Jake Schill
DATE:	10.5.17
FILE:	
CHECKED BY:	JP

DISC ELEV	1601.40	PUMP CENTERLINE	
SUCT ELEV	1584.50	ELEV.	1584.50

STATIC SUCTION HEAD: 0.00 ft.

TOTAL FLOW (gpm) 0	0	25	50	75	100	125
(MGD)	0.00	0.04	0.07	0.11	0.14	0.18
STATIC HEAD:	16.90	16.90	16.90	16.90	16.90	16.90
Optional: PUMP HEAD , ft.						

SUCTION ENTRANCE							SEGMENT FLOW (gpm) 0	0	25	50	75	100	125
						FLOW RATIO: 1.000							
DIAMETER (in):		1.91	LENGTH:	3 ft.	C: 130		VEL fps	0.00	2.79	5.58	8.37	11.16	13.95
FE1	Entrance Loss	1	K =	0.50			V HD ft	0.00	0.12	0.48	1.09	1.94	3.02
			K =				H/1000 ft	0.00	20.96	75.67	160.34	273.16	412.94
			K =				HD L ft	0.00	0.12	0.47	1.03	1.79	2.75
			K =		TOT K=	0.50	ACCUM H ft	16.90	17.02	17.37	17.93	18.69	19.65

Pump to Influent EQ Tank							SEGMENT FLOW (gpm)	0	25	50	75	100	125
						FLOW RATIO: 1.000							
DIAMETER (in):		1.91	LENGTH:	25 ft.	C: 130		VEL fps	0.00	2.79	5.58	8.37	11.16	13.95
FE2	Ball Valve	2	K =	0.06		0	V HD ft	0.00	0.12	0.48	1.09	1.94	3.02
FE3	Swing Check Valve	1	K =	1.90			H/1000 ft	0.00	20.96	75.67	160.34	273.16	412.94
			K =				HD L ft	0.00	0.77	2.87	6.21	10.74	16.43
					TOT K=	2.02	ACCUM H ft	0	16.90	17.79	20.24	24.13	29.42	36.08

Into Influent EQ Tank							SEGMENT FLOW (gpm)	0	25	50	75	100	125
						FLOW RATIO: 1.000							
DIAMETER (in):		1.91	LENGTH:	0 ft.	C: 130		VEL fps	0.00	2.79	5.58	8.37	11.16	13.95
FE6	Bend 90	3	K =	0.57		0	V HD ft	0.00	0.12	0.48	1.09	1.94	3.02
	Exit	1	K =	1.00			H/1000 ft	0.00	20.96	75.67	160.34	273.16	412.94
			K =				HD L ft	0.00	0.33	1.31	2.95	5.24	8.19
					TOT K=	2.71	ACCUM H ft	0	16.90	18.12	21.55	27.08	34.67	44.28

TDH at Design Flow Rate

Notes:

- Finished floor elevation of treatment building and FBR pad = 1587.50'
- Equipment pad elevation within treatment building = 1588.0'
- Sump bottom elevation = 1584.50'
- Tank and Equipment data is included in Appendix C
- See Tank Nozzle Schedule (M-8) for DISC ELEV and SUCT ELEV

P-003 Pumping System Head Curve Analysis

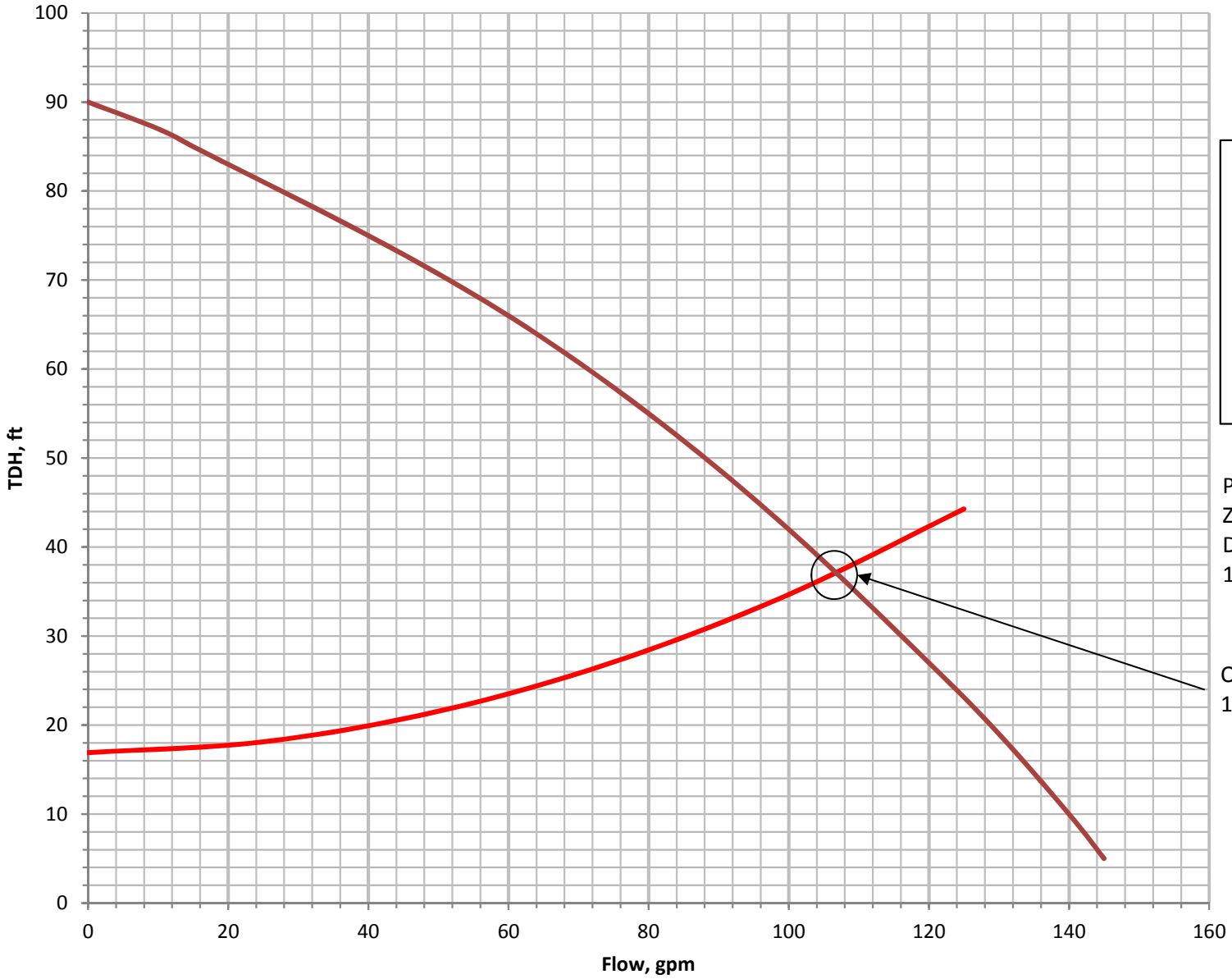

Pump Model:
Zoeller
D-188
1.5 hp, 200V, 1 ϕ, 60 hz

Operating Point:
105 gpm @ 16 psi

SYSTEM HEAD CURVE CALCULATIONS

PROJECT:	Former Universal Propulsion Company, Inc. Facility
JOB NO.:	
SYSTEM:	P-004 System Curve
	FBR Containtment Submersible Sump Pump

ARCADIS, Inc.

BY:	Jake Schill
DATE:	10.5.17
FILE:	
CHECKED BY:	JP

DISC ELEV	1601.40	PUMP CENTERLINE	
SUCT ELEV	1584.50	ELEV.	1584.50

STATIC SUCTION HEAD: 0.00 ft.

TOTAL FLOW (gpm) 0	0	25	50	75	100	125
(MGD)	0.00	0.04	0.07	0.11	0.14	0.18
STATIC HEAD:	16.90	16.90	16.90	16.90	16.90	16.90
Optional: PUMP HEAD , ft.						

SUCTION ENTRANCE							SEGMENT FLOW (gpm)	0	0	25	50	75	100	125
							FLOW RATIO: 1.000							
DIAMETER (in):		2.86	LENGTH:	3	ft. C:	130	VEL fps		0.00	1.25	2.49	3.74	4.98	6.23
FE1	Entrance Loss	1	K =	0.50			V HD ft		0.00	0.02	0.10	0.22	0.39	0.60
			K =				H/1000 ft		0.00	2.94	10.60	22.46	38.27	57.85
			K =				HD L ft		0.00	0.02	0.08	0.18	0.31	0.47
			K =		TOT K=	0.50	ACCUM H ft		16.90	16.92	16.98	17.08	17.21	17.37

Pump to Influent EQ Tank							SEGMENT FLOW (gpm)		0	25	50	75	100	125
							FLOW RATIO: 1.000							
DIAMETER (in):		2.86	LENGTH:	85	ft. C:	130	VEL fps		0.00	1.25	2.49	3.74	4.98	6.23
FE2	Ball Valve	2	K =	0.06		0	V HD ft		0.00	0.02	0.10	0.22	0.39	0.60
FE3	Swing Check Valve	1	K =	1.90			H/1000 ft		0.00	2.94	10.60	22.46	38.27	57.85
			K =				HD L ft		0.00	0.30	1.10	2.35	4.03	6.13
					TOT K=	2.02	ACCUM H ft	0	16.90	17.22	18.08	19.42	21.24	23.51

Into Influent EQ Tank							SEGMENT FLOW (gpm)		0	25	50	75	100	125
							FLOW RATIO: 1.000							
DIAMETER (in):		2.86	LENGTH:	0	ft. C:	130	VEL fps		0.00	1.25	2.49	3.74	4.98	6.23
FE6	Bend 90	9	K =	0.57		0	V HD ft		0.00	0.02	0.10	0.22	0.39	0.60
	Exit	1	K =	1.00			H/1000 ft		0.00	2.94	10.60	22.46	38.27	57.85
			K =				HD L ft		0.00	0.15	0.59	1.33	2.36	3.69
					TOT K=	6.13	ACCUM H ft	0	16.90	17.37	18.67	20.75	23.60	27.20

TDH at Design Flow Rate

Notes:

- Finished floor elevation of treatment building and FBR pad = 1587.50'
- Equipment pad elevation within treatment building = 1588.0'
- Sump bottom elevation = 1584.50'
- Tank and Equipment data is included in Appendix C
- See Tank Nozzle Schedule (M-8) for DISC ELEV and SUCT ELEV

P-004 Pumping System Head Curve Analysis

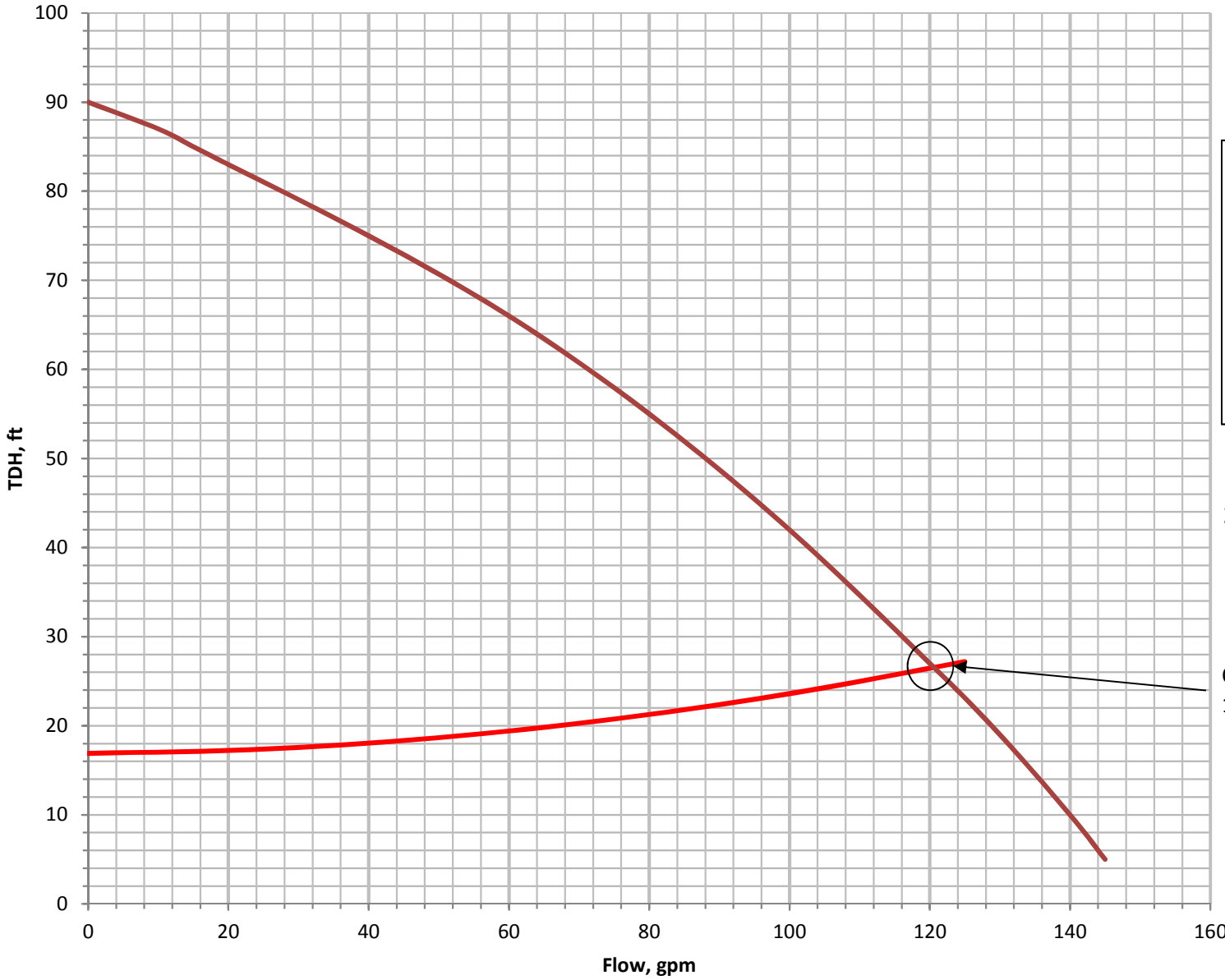

Pump Model:
Zoeller
D-188
1.5 hp, 200V, 1 ϕ, 60 hz

Operating Point:
120 gpm @ 12 psi

SYSTEM HEAD CURVE CALCULATIONS

PROJECT:	Former Universal Propulsion Company, Inc. Facility
JOB NO.:	
SYSTEM:	P-201 System Curve
	FBR Transfer Pump Inline Vertical Multistage Pump

ARCADIS, Inc.

ARCADIS Design & Consultancy for natural and built assets

BY:	Jake Schill
DATE:	10.5.17
FILE:	
CHECKED BY:	JP

DISC ELEV	1604.00	PUMP CENTERLINE	
SUCT ELEV	1588.30	ELEV.	1588.30

STATIC SUCTION HEAD: 0.00 ft.

TOTAL FLOW (gpm) 0	0	35	50	75	100	125
(MGD)	0.00	0.05	0.07	0.11	0.14	0.18
STATIC HEAD:	15.70	15.70	15.70	15.70	15.70	15.70
Optional: PUMP HEAD , ft.						

SUCTION ENTRANCE							SEGMENT FLOW (gpm)	0	0	35	50	75	100	125
							FLOW RATIO:		1.000					
DIAMETER (in):		1.91	LENGTH:	5	ft. C:	130	VEL fps		0.00	3.91	5.58	8.37	11.16	13.95
FE1	Entrance Loss	1	K =	0.50			V HD ft		0.00	0.24	0.48	1.09	1.94	3.02
			K =				H/1000 ft		0.00	39.09	75.67	160.34	273.16	412.94
			K =				HD L ft		0.00	0.31	0.62	1.35	2.33	3.58
			K =		TOT K=	0.50	ACCUM H ft		15.70	16.01	16.32	17.05	18.03	19.28

Pump to FBR							SEGMENT FLOW (gpm)		0	35	50	75	100	125
							FLOW RATIO:		1.000					
DIAMETER (in):		1.91	LENGTH:	25	ft. C:	130	VEL fps		0.00	3.91	5.58	8.37	11.16	13.95
FE2	Ball Valve	2	K =	0.06		0	V HD ft		0.00	0.24	0.48	1.09	1.94	3.02
	Flow Meter	1	K =	1.00			H/1000 ft		0.00	39.09	75.67	160.34	273.16	412.94
	Swing Check Valve	1	K =	1.90			HD L ft		0.00	2.50	5.01	11.02	19.29	29.80
	Bend 90	6		0.57	TOT K=	6.44	ACCUM H ft		15.70	18.52	21.33	28.06	37.32	49.07

FBR Headloss							SEGMENT FLOW (gpm)		0	35	50	75	100	125
							FLOW RATIO:		1.000					
DIAMETER (in):		1.91	LENGTH:		ft. C:	130	VEL fps		0.00	3.91	5.58	8.37	11.16	13.95
FE3	FBR Skid Headloss		K =				V HD ft		0.00	0.24	0.48	1.09	1.94	3.02
			K =				H/1000 ft		0.00	39.09	75.67	160.34	273.16	412.94
			K =				HD L ft		27.72	27.72	27.72	27.72	27.72	27.72
			K =		TOT K=	0.00	ACCUM H ft		43.42	46.24	49.05	55.78	65.04	76.79

TDH at Design Flow Rate

Notes:

- Finished floor elevation of treatment building and FBR pad = 1587.50'
- Equipment pad elevation within treatment building = 1588.0'
- Tank and Equipment data is included in Appendix C
- DISC ELEV based on maximum FBR height of 16' (vendor specification)
- See Tank Nozzle Schedule (M-8) for SUCT ELEV
- Assumed 12 psi headloss through FBR Skid (vendor specified)

P-201 Pumping System Head Curve Analysis

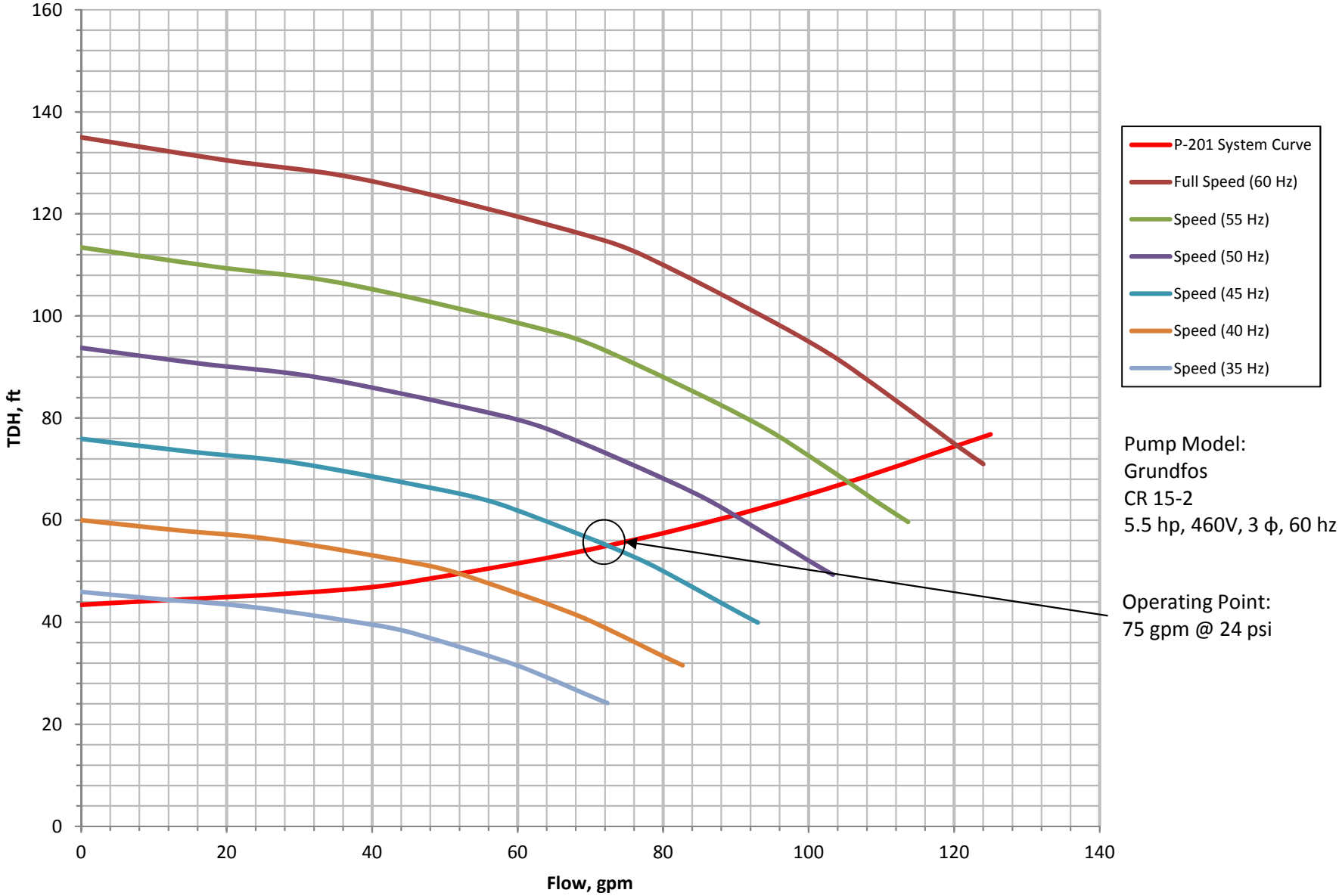

SYSTEM HEAD CURVE CALCULATIONS

PROJECT:	Former Universal Propulsion Company, Inc. Facility
JOB NO.:	
SYSTEM:	P-211 System Curve
	Backwash Decant Pump Inline Vertical Multistage Pump

ARCADIS, Inc.

BY:	Jake Schill
DATE:	10.5.17
FILE:	
CHECKED BY:	JP

DISC ELEV	1601.40	PUMP CENTERLINE	
SUCT ELEV	1587.80	ELEV.	1587.80

STATIC SUCTION HEAD: 0.00 ft.

TOTAL FLOW (gpm) 0	0	25	50	75	100	125
(MGD)	0.00	0.04	0.07	0.11	0.14	0.18
STATIC HEAD:	13.60	13.60	13.60	13.60	13.60	13.60
Optional: PUMP HEAD , ft.						

SUCTION ENTRANCE							SEGMENT FLOW (gpm) 0	0	25	50	75	100	125
						FLOW RATIO: 1.000							
DIAMETER (in):		1.91	LENGTH:	5 ft.	C: 130		VEL fps	0.00	2.79	5.58	8.37	11.16	13.95
FE1	Entrance Loss	1	K =	0.50			V HD ft	0.00	0.12	0.48	1.09	1.94	3.02
			K =				H/1000 ft	0.00	20.96	75.67	160.34	273.16	412.94
			K =				HD L ft	0.00	0.17	0.62	1.35	2.33	3.58
			K =		TOT K=	0.50	ACCUM H ft	13.60	13.77	14.22	14.95	15.93	17.18

Pump to Influent EQ Tank							SEGMENT FLOW (gpm)	0	25	50	75	100	125
						FLOW RATIO: 1.000							
DIAMETER (in):		1.91	LENGTH:	110 ft.	C: 130		VEL fps	0.00	2.79	5.58	8.37	11.16	13.95
FE2	Ball Valve	2	K =	0.06		0	V HD ft	0.00	0.12	0.48	1.09	1.94	3.02
FE3	Butterfly Valve	1	K =	0.86			H/1000 ft	0.00	20.96	75.67	160.34	273.16	412.94
FE4	Flow Meter	1	K =	1.00			HD L ft	0.00	2.78	10.20	21.86	37.56	57.15
FE5	Swing Check Valve	1		1.90	TOT K=	3.88	ACCUM H ft	0	13.60	16.54	24.42	36.81	53.49	74.33

Into Influent EQ Tank							SEGMENT FLOW (gpm)	0	25	50	75	100	125
						FLOW RATIO: 1.000							
DIAMETER (in):		1.91	LENGTH:	0 ft.	C: 130		VEL fps	0.00	2.79	5.58	8.37	11.16	13.95
FE6	Bend 90	13	K =	0.57		0	V HD ft	0.00	0.12	0.48	1.09	1.94	3.02
	Exit	1	K =	1.00			H/1000 ft	0.00	20.96	75.67	160.34	273.16	412.94
			K =				HD L ft	0.00	1.02	4.07	9.15	16.27	25.43
					TOT K=	8.41	ACCUM H ft	0	13.60	17.56	28.49	45.96	69.76	99.76

TDH at Design Flow Rate

Notes:

- Finished floor elevation of treatment building and FBR pad = 1587.50'
- Equipment pad elevation within treatment building = 1588.0'
- Tank and Equipment data is included in Appendix C
- See Tank Nozzle Schedule (M-8) for DISC ELEV and SUCT ELEV

P-211 Pumping System Head Curve Analysis

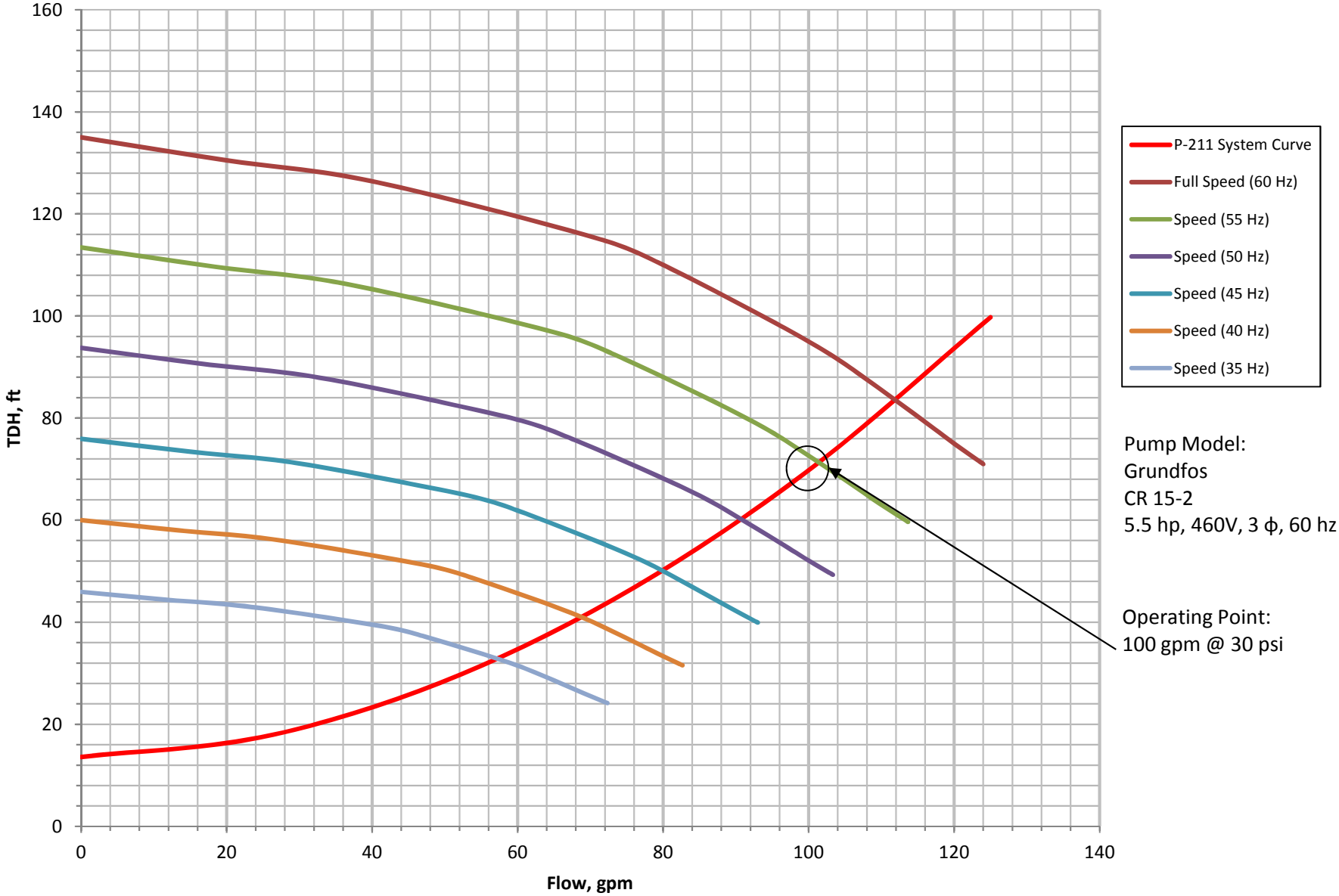

SYSTEM HEAD CURVE CALCULATIONS

PROJECT:	Former Universal Propulsion Company, Inc. Facility
JOB NO.:	
SYSTEM:	P-401 System Curve
	Filtration Transfer Pump Inline Vertical Multistage Pump

ARCADIS, Inc.

ARCADIS Design & Consultancy for natural and built assets

BY:	Jake Schill
DATE:	10.5.17
FILE:	
CHECKED BY:	JP

DISC ELEV	1601.40	PUMP CENTERLINE	
SUCT ELEV	1588.30	ELEV.	1588.30
STATIC SUCTION HEAD:		0.00 ft.	

TOTAL FLOW (gpm) 0	0	20	35	50	75	125
(MGD)	0.00	0.03	0.05	0.07	0.11	0.18
STATIC HEAD:	13.10	13.10	13.10	13.10	13.10	13.10
Optional: PUMP HEAD , ft.						

SUCTION ENTRANCE							SEGMENT FLOW (gpm) 0	0	20	35	50	75	125
							FLOW RATIO: 1.000						
DIAMETER (in):		2.86	LENGTH:	5 ft.	C:	130	VEL fps	0.00	1.00	1.74	2.49	3.74	6.23
FE1	Entrance Loss	1	K =	0.50			V HD ft	0.00	0.02	0.05	0.10	0.22	0.60
			K =				H/1000 ft	0.00	1.94	5.48	10.60	22.46	57.85
			K =				HD L ft	0.00	0.02	0.05	0.10	0.22	0.59
			K =		TOT K=	0.50	ACCUM H ft	13.10	13.12	13.15	13.20	13.32	13.69

Pump to MMF							SEGMENT FLOW (gpm)	0	20	35	50	75	125
							FLOW RATIO: 1.000						
DIAMETER (in):		2.86	LENGTH:	150 ft.	C:	130	VEL fps	0.00	1.00	1.74	2.49	3.74	6.23
FE2	Ball Valve	2	K =	0.06		0	V HD ft	0.00	0.02	0.05	0.10	0.22	0.60
FE3	Flow Meter	1	K =	1.00			H/1000 ft	0.00	1.94	5.48	10.60	22.46	57.85
FE4	Swing Check Valve	1	K =	1.90			HD L ft	0.00	0.46	1.34	2.65	5.75	15.30
FE5	Bend 90	14	K =	0.57	TOT K=	11.00	ACCUM H ft	13.10	13.58	14.49	15.85	19.07	28.99

MMF Headloss							SEGMENT FLOW (gpm)	0	20	35	50	75	125
							FLOW RATIO: 1.000						
DIAMETER (in):		2.86	LENGTH:		ft. C:	130							
FE6	MMF Headloss		K =				VEL fps	0.00	1.00	1.74	2.49	3.74	6.23
FE7	Butterfly Valve	2	K =	0.86			V HD ft	0.00	0.02	0.05	0.10	0.22	0.60
FE8	Expansion (2" x 3")	2	K =	0.15			H/1000 ft	0.00	1.94	5.48	10.60	22.46	57.85
FE9	Ball Valve	2	K =	0.06			HD L ft	23.10	23.14	23.21	23.33	23.61	24.51
FE10	Reducer (2" x 3")	2	K =	0.10	TOT K=	2.34	ACCUM H ft	36.20	36.71	37.70	39.18	42.68	53.50

IEX Headloss							SEGMENT FLOW (gpm)	0	20	35	50	75	125
							FLOW RATIO: 1.000						
DIAMETER (in):		2.86	LENGTH:	20 ft.	C:	130							
FE11	IEX Headloss						VEL fps	0.00	1.00	1.74	2.49	3.74	6.23
FE12	Swing Check Valve	2	K =	0.10			V HD ft	0.00	0.02	0.05	0.10	0.22	0.60
FE13	Ball Valve	16	K =	0.06			H/1000 ft	0.00	1.94	5.48	10.60	22.46	57.85
FE14	Bend 90	30	K =	0.57			HD L ft	46.20	46.54	47.22	48.27	50.82	58.95
FE15	Exit	1	K =	1.00	TOT K=	19.26	ACCUM H ft	82.40	83.25	84.92	87.44	93.50	112.44

TDH at Design Flow Rate

Notes:

- Finished floor elevation of treatment building and FBR pad = 1587.50'
- Equipment pad elevation within treatment building = 1588.0'
- Tank and Equipment data is included in Appendix C
- See Tank Nozzle Schedule (M-8) for DISC ELEV and SUCT ELEV
- Assumed 10 psi headloss due to multi-media filter media fouling (vendor recommended value)
- Assumed 5 psi headloss per vessel (4) due to ion exchange resin fouling (vendor recommended value)

P-401 Pumping System Head Curve Analysis

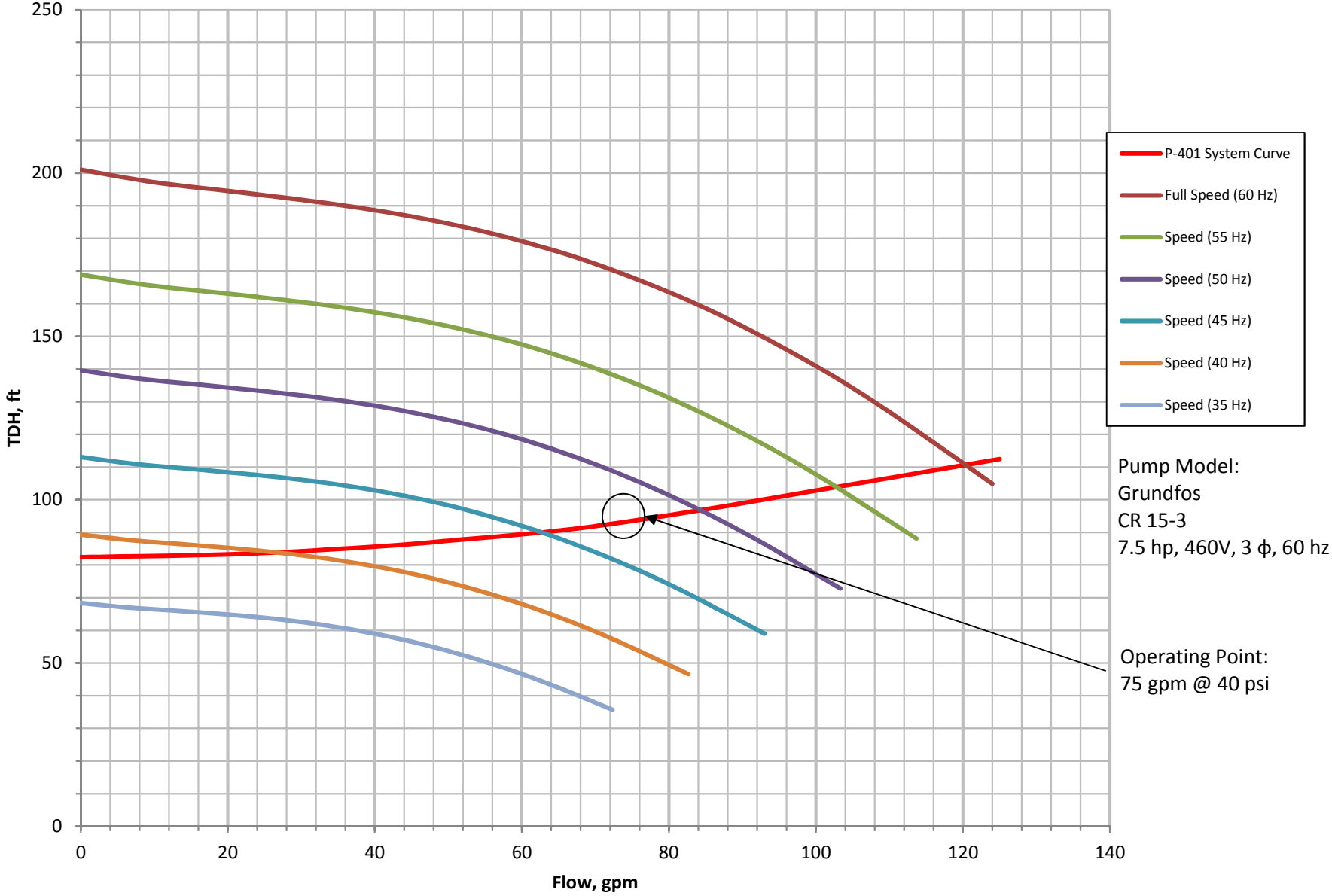

Pump Model:
Grundfos
CR 15-3
7.5 hp, 460V, 3 ϕ, 60 hz

Operating Point:
75 gpm @ 40 psi

SYSTEM HEAD CURVE CALCULATIONS

PROJECT:	Former Universal Propulsion Company, Inc. Facility
JOB NO.:	
SYSTEM:	P-501 System Curve
	Clean Backwash Pump Inline Vertical Multistage Pump

ARCADIS, Inc.

ARCADIS Design & Consultancy for natural and built assets

BY:	Jake Schill
DATE:	10.5.17
FILE:	
CHECKED BY:	JP

DISC ELEV	1609.30	PUMP CENTERLINE	
SUCT ELEV	1588.30	ELEV.	1588.30
STATIC SUCTION HEAD:		0.00 ft.	

TOTAL FLOW (gpm) 0	0	35	50	75	100	125
(MGD)	0.00	0.05	0.07	0.11	0.14	0.18
STATIC HEAD:	21.00	21.00	21.00	21.00	21.00	21.00
Optional: PUMP HEAD , ft.						

SUCTION ENTRANCE							SEGMENT FLOW (gpm) 0	0	35	50	75	100	125
							FLOW RATIO: 1.000						
DIAMETER (in):		2.86	LENGTH:	5	ft. C:	130	VEL fps	0.00	1.74	2.49	3.74	4.98	6.23
FE1	Entrance Loss	1	K =	0.50			V HD ft	0.00	0.05	0.10	0.22	0.39	0.60
			K =				H/1000 ft	0.00	5.48	10.60	22.46	38.27	57.85
			K =				HD L ft	0.00	0.05	0.10	0.22	0.38	0.59
			K =		TOT K=	0.50	ACCUM H ft	21.00	21.05	21.10	21.22	21.38	21.59

Pump to GAC							SEGMENT FLOW (gpm)	0	35	50	75	100	125
							FLOW RATIO: 1.000						
DIAMETER (in):		2.86	LENGTH:	175	ft. C:	130							
FE2	Reducer (3" x 2")	2		0.10									
FE3	Expansion (2" x 3")	2		0.15			VEL fps	0.00	1.74	2.49	3.74	4.98	6.23
FE4	Ball Valve	3	K =	0.06			V HD ft	0.00	0.05	0.10	0.22	0.39	0.60
FE5	Flow Meter	1	K =	1.00			H/1000 ft	0.00	5.48	10.60	22.46	38.27	57.85
FE6	Swing Check Valve	1	K =	1.90			HD L ft	0.00	1.40	2.75	5.94	10.27	15.71
FE7	Bend 90	10	K =	0.57	TOT K=	9.28	ACCUM H ft	21.00	22.45	23.85	27.16	31.66	37.30

GAC Headloss							SEGMENT FLOW (gpm)	0	35	50	75	100	125
							FLOW RATIO: 1.000						
DIAMETER (in):		2.86	LENGTH:		ft. C:	130	VEL fps	0.00	1.74	2.49	3.74	4.98	6.23
FE8	Swing Check Valve	2	K =	1.90			V HD ft	0.00	0.05	0.10	0.22	0.39	0.60
FE9	Assume 40 psi at GAC		K =				H/1000 ft	0.00	5.48	10.60	22.46	38.27	57.85
FE10	Bend 90	5	K =	0.57			HD L ft	92.40	92.76	93.14	94.06	95.35	97.00
FE11	Exit	1	K =	1.00	TOT K=	7.65	ACCUM H ft	113.40	115.21	116.99	121.22	127.00	134.30
TDH at Design Flow Rate													

Notes:

- Finished floor elevation of treatment building and FBR pad = 1587.50'
- Equipment pad elevation within treatment building = 1588.0'
- Tank and Equipment data is included in Appendix C
- See Tank Nozzle Schedule (M-8) for DISC ELEV and SUCT ELEV
- Assumed 40 psi required pressure to backwash granular activated carbon vessel (vendor recommended)
- Calculation performed on granular activated carbon vessel to represent largest headloss condition for backwash

P-501 Pumping System Head Curve Analysis

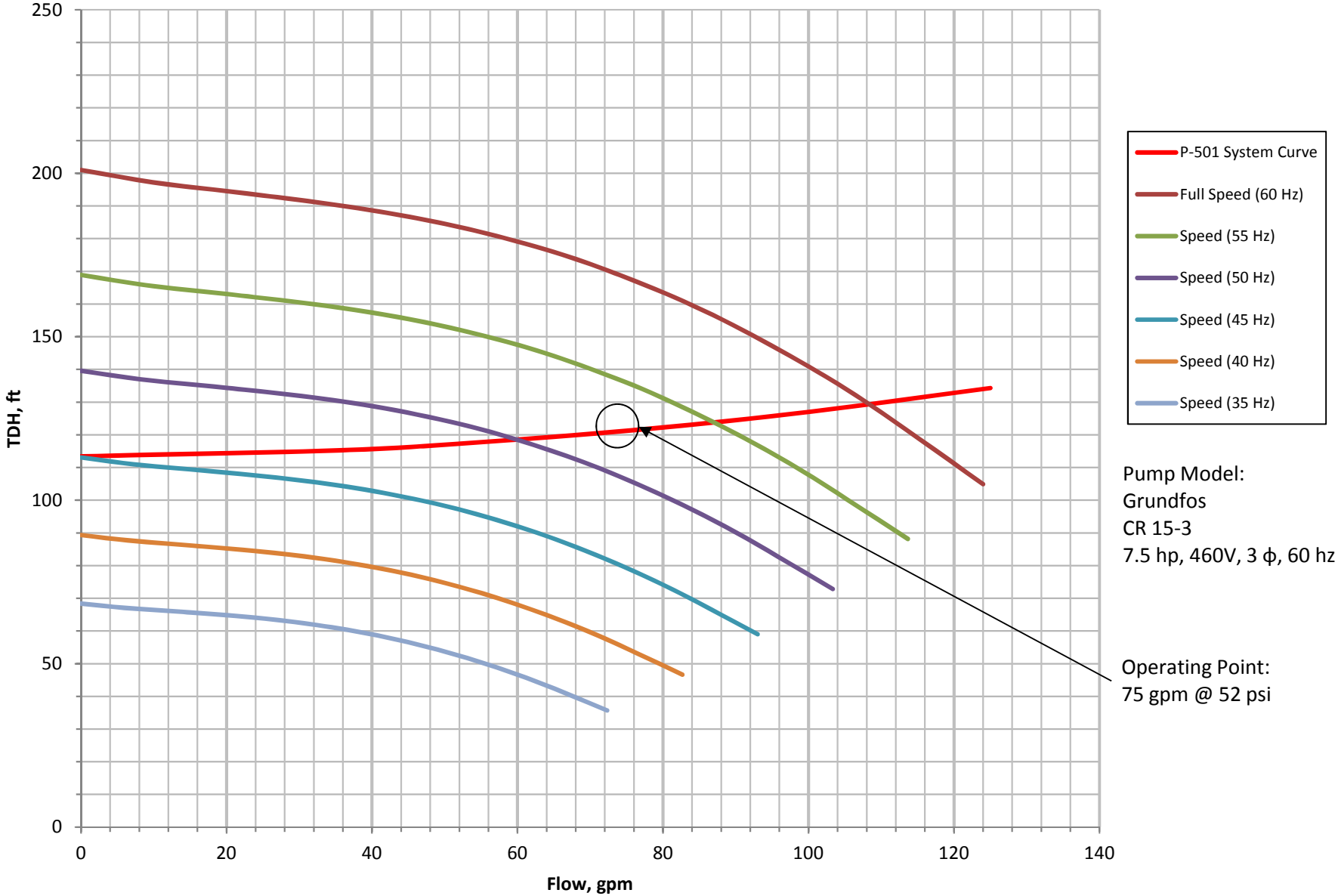

SYSTEM HEAD CURVE CALCULATIONS

PROJECT:	Former Universal Propulsion Company, Inc. Facility
JOB NO.:	
SYSTEM:	P-701 System Curve
	Injection Pump Inline Vertical Multistage Pump

ARCADIS, Inc.

ARCADIS Design & Consultancy for natural and built assets

BY:	Jake Schill
DATE:	10.5.17
FILE:	
CHECKED BY:	JP

DISC ELEV	1603.22	PUMP CENTERLINE	
SUCT ELEV	1588.30	ELEV.	1588.30

STATIC SUCTION HEAD: 0.00 ft.

TOTAL FLOW (gpm) 0	0	35	50	75	100	125
(MGD)	0.00	0.05	0.07	0.11	0.14	0.18
STATIC HEAD:	14.92	14.92	14.92	14.92	14.92	14.92
Optional: PUMP HEAD , ft.						

SUCTION ENTRANCE							SEGMENT FLOW (gpm)	0	0	35	50	75	100	125
							FLOW RATIO: 1.000							
DIAMETER (in):		2.86	LENGTH:	5 ft.	C:	130	VEL fps		0.00	1.74	2.49	3.74	4.98	6.23
FE1	Entrance Loss	1	K =	0.50			V HD ft		0.00	0.05	0.10	0.22	0.39	0.60
			K =				H/1000 ft		0.00	5.48	10.60	22.46	38.27	57.85
			K =				HD L ft		0.00	0.05	0.10	0.22	0.38	0.59
			K =		TOT K=	0.50	ACCUM H ft		14.92	14.97	15.02	15.14	15.30	15.51

Pump to Manifold							SEGMENT FLOW (gpm)		0	35	50	75	100	125
							FLOW RATIO: 1.000							
DIAMETER (in):		2.86	LENGTH:	22.5 ft.	C:	130								
FE2	Butterfly Valve	1	K =	0.86										
FE3	Reducer (3" x 2")	2	K =	0.10										
FE4	Expansion (2" x 3")	2	K =	0.15										
FE5	Ball Valve	3	K =	0.06			VEL fps		0.00	1.74	2.49	3.74	4.98	6.23
FE6	Flow Meter	1	K =	1.00			V HD ft		0.00	0.05	0.10	0.22	0.39	0.60
FE7	Swing Check Valve	1	K =	1.90			H/1000 ft		0.00	5.48	10.60	22.46	38.27	57.85
FE8	Bend 90	3	K =	0.57			HD L ft		0.00	0.42	0.85	1.87	3.29	5.09
FE9	Expansion (3" x 6")	1	K =	0.15	TOT K=	6.30	ACCUM H ft		14.92	15.39	15.87	17.01	18.59	20.60

Manifold							SEGMENT FLOW (gpm)		20	20	20	20	20	20
							FLOW RATIO: 1.000							
DIAMETER (in):		1.91	LENGTH:	ft.	C:	130								
FE10	Reducer (6" x 2")	1	K =	0.10										
FE11	Swing Check Valve	1	K =	1.90										
FE11	Pressure Control Valve	1	K =	5.00										
FE12	Ball Valve	1	K =	0.06										
FE13	Butterfly Valve	1	K =	0.86										
FE14	Reducer (2" x 1")	1	K =	0.10			VEL fps		2.23	2.23	2.23	2.23	2.23	2.23
FE15	Diaphragm Valve	1	K =	5.00			V HD ft		0.08	0.08	0.08	0.08	0.08	0.08
FE15	Flow Meter	1	K =	1.00			H/1000 ft		13.87	13.87	13.87	13.87	13.87	13.87
FE16	Expansion (1" x 2")	1	K =	0.15			HD L ft		1.19	1.19	1.19	1.19	1.19	1.19
FE18	Bend 90	2	K =	0.57	TOT K=	15.31	ACCUM H ft		16.11	16.58	17.05	18.20	19.78	21.79

Manifold to Injection Wellhead							SEGMENT FLOW (gpm)		20	20	20	20	20	20
							FLOW RATIO: 1.000							
DIAMETER (in):		1.91	LENGTH:	790 ft.	C:	130	VEL fps		2.23	2.23	2.23	2.23	2.23	2.23
FE19	Ball Valve	1	K =	0.06			V HD ft		0.08	0.08	0.08	0.08	0.08	0.08
FE20	Swing Check Valve	1	K =	1.90			H/1000 ft		13.87	13.87	13.87	13.87	13.87	13.87
FE21	Reducer (2" x 1")	1	K =	0.10			HD L ft		98.89	98.89	98.89	98.89	98.89	98.89
FE22	38 psi required at well head		K =		TOT K=	2.06	ACCUM H ft		115.00	115.47	115.95	117.09	118.67	120.68

Injection Wellhead to Bottom of Drop Tube							SEGMENT FLOW (gpm)		20	20	20	20	20	20
							FLOW RATIO: 1.000							
DIAMETER (in):		1.48	LENGTH:	300 ft.	C:	130	VEL fps		3.75	3.75	3.75	3.75	3.75	3.75
FE23	Spring Check Valve	5	K =				V HD ft		0.22	0.22	0.22	0.22	0.22	0.22
							H/1000 ft		49.04	49.04	49.04	49.04	49.04	49.04
							HD L ft		37.81	37.81	37.81	37.81	37.81	37.81
					TOT K=	0.00	ACCUM H ft		152.81	153.28	153.76	154.90	156.48	158.50

TDH at Design Flow Rate

Notes:

- Finished floor elevation of treatment building and FBR pad = 1587.50'
- Equipment pad elevation within treatment building = 1588.0'
- DISC ELEV worst case scenario assumed to be RW-02 due to distance and elevation, estimated RW-02 top of casing elevation = 1603.22
- Tank and Equipment data is included in Appendix C
- See Tank Nozzle Schedule (M-8) for SUCT ELEV
- Assumed 38 psi required pressure to fully open injection drop tube well check valves (vendor recommended)

P-701 Pumping System Head Curve Analysis

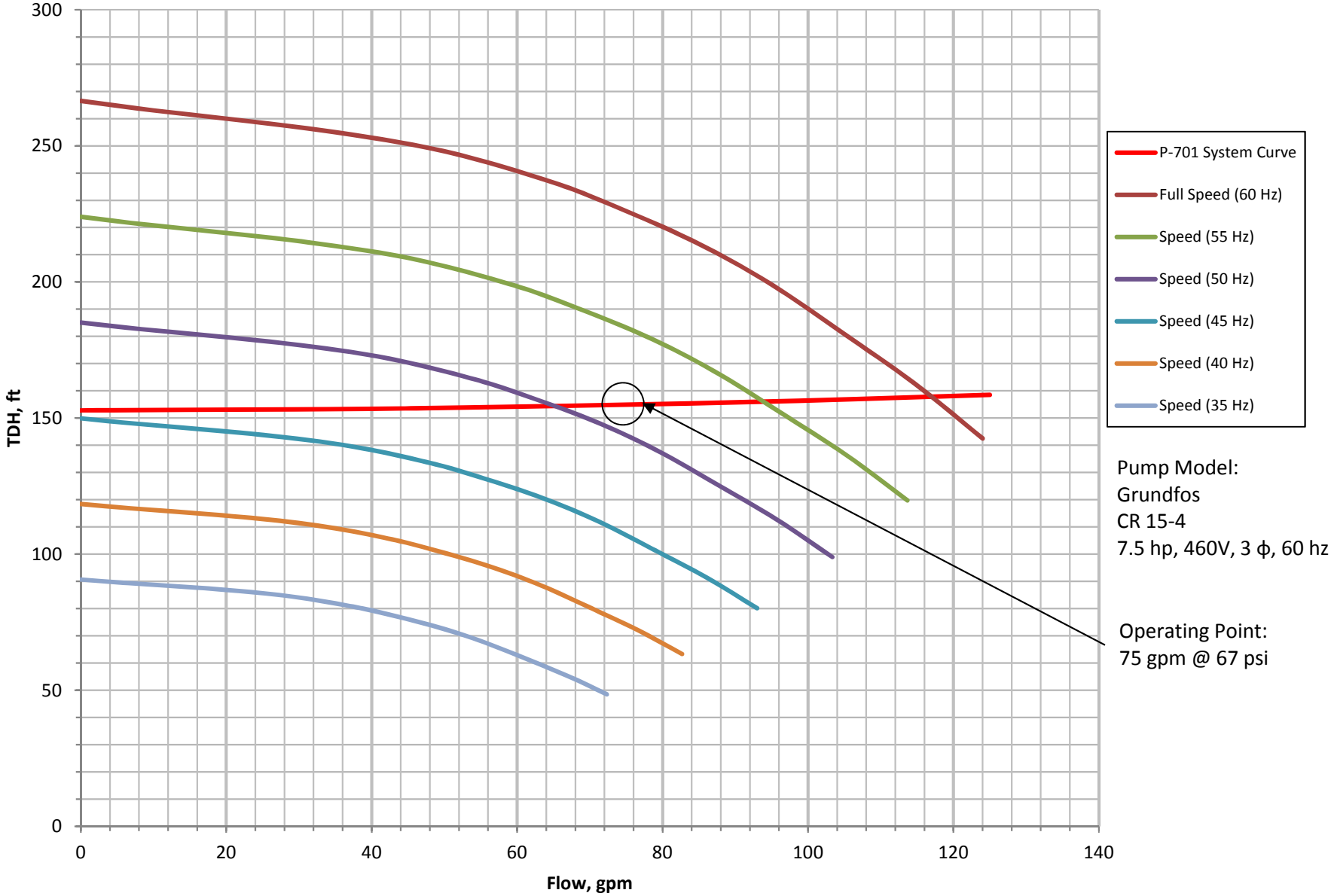

APPENDIX B

HDPE Specifications and Pressure Testing Procedures

PERFORMANCE PIPE
A Division of Chevron Phillips Chemical Company LP

DRISCOPLEX® 4000/4100 Series PE Piping

DRISCOPLEX® 4000/4100 Series Municipal and Industrial HDPE Pipe

DRISCOPLEX® HDPE Pipe is available to meet your needs in compliance with ASTM D3035/AWWA C901 or ASTM F714/AWWA C906 and NSF/ANSI 61 product standards. Factory Mutual FM1613 product standard is also available.

Produced from only the highest rated HDPE pipe material, DRISCOPLEX® 4000/4100 Series Pipe is manufactured from PE4710 resin as listed in PPI-TR4.

DRISCOPLEX® HDPE Pipe Advantages:

- ✓ Durable
- ✓ Leak Tight
- ✓ Excellent Flow
- ✓ Low Surge
- ✓ Fatigue Free
- ✓ Impact Resistant
- ✓ Trenchless Install
- ✓ Bend Radius
- ✓ Chemical Resistant
- ✓ UV Protection
- ✓ Flexibility
- ✓ Environmental

Optional Color Stripes to Identify the Application	
Color	**Application**
Blue	Potable Water
Green	Wastewater
Purple	Treated Effluent, Reclaimed Water
Red	Factory Mutual, Underground Fire Main
White – Gray – Brown	Customer Specified

Standard product is solid black with no stripes. IPS – 4 single stripes / DIPS – 3 sets of dual stripes.

© 2014 Chevron Phillips Chemical Company LP
Performance Pipe, a division of Chevron Phillips Chemical Company LP | 5085 W. Park Blvd | Suite 500 | Plano, TX 75093 | Phone: 800-527-0662 | Fax: 972-599-7329

PERFORMANCE PIPE
A Division of Chevron Phillips Chemical Company LP

DRISCOPLEX® 4000/4100 Series PE Piping

DriscoPlex® Series Pipe Material Physical Properties		
Property	**Standard**	**Typical Value†**
Material Designation		PE4710
Cell Classification	ASTM D3350	445574C (black)
Density [4]	ASTM D1505	0.960 g/cc (black)
Melt Index [4]	ASTM D1238	0.08 g/10 min
Flexural Modulus [5]	ASTM D790	>120,000 psi
Tensile Strength [5]	ASTM D638 Type IV	>3500 psi
SCG (PENT) [7]	ASTM F1473	>500 hours
HDB at 73°F (23°C) [4]	ASTM D2837	1600 psi
Color; UV stabilizer [C]	ASTM D3350	Black

This is not a product specification and does not guarantee or establish specific minimum or maximum values or manufacturing tolerance for material or piping products to be supplied. Values obtained from tests of specimens taken from piping product may vary from these typical values.

Additional Sizes and DR available. Contact Performance Pipe or visit www.performancepipe.com

Selected Dimension Ratios for DriscoPlex® 4000 DIPS Pipe (Additional Sizes and DR's available. Contact Performance Pipe)

DIPS		DR 17 PC = 125 psi			DR 11 PC = 200 psi		
Pipe Size, in.	OD, in.	Min Wall in.	Avg. ID in.	Wgt. lbs/ft	Min Wall in.	Avg. ID in.	Wgt. lbs/ft
4	4.80	0.282	4.201	1.76	0.436	3.876	2.62
6	6.90	0.406	6.040	3.64	0.627	5.571	5.42
8	9.05	0.532	7.921	6.26	0.823	7.305	9.33
10	11.10	0.653	9.716	9.42	1.009	8.961	14.03
12	13.20	0.776	11.554	13.32	1.200	10.656	19.84
14	15.30	0.900	13.392	17.89	1.391	12.351	26.65
16	17.40	1.024	15.230	23.14	1.582	14.046	34.47
18	19.50	1.147	17.068	29.07	1.773	15.741	43.30
20	21.60	1.271	18.906	35.66	1.964	17.436	53.13
24	25.80	1.518	22.583	50.88	2.345	20.829	75.77
30	32.00	1.882	28.009	78.28	2.909	25.833	116.58
36	38.30	2.253	33.524	112.13	3.482	30.918	167.02
42	44.50	2.618	38.951	151.37			

Selected Dimension Ratios for DriscoPlex® 4100 IPS Pipe (Additional Sizes and DR's available. Contact Performance Pipe)

IPS		DR 17 PC = 125 psi			DR 11 PC = 200 psi		
Pipe Size, in.	OD, in.	Min Wall in.	Avg. ID in.	Wgt. lbs/ft	Min Wall in.	Avg. ID in.	Wgt. lbs/ft
2	2.375	0.140	2.078	0.43	0.216	1.917	0.64
3	3.50	0.206	3.063	0.94	0.318	2.826	1.39
4	4.50	0.265	3.938	1.55	0.409	3.633	2.31
6	6.63	0.390	5.798	3.36	0.602	5.349	5.00
8	8.63	0.507	7.550	5.69	0.784	6.963	8.47
10	10.75	0.632	9.410	8.83	0.977	8.679	13.16
12	12.75	0.750	11.160	12.43	1.159	10.293	18.51
14	14.00	0.824	12.253	14.98	1.273	11.301	22.32
16	16.00	0.941	14.005	19.57	1.455	12.915	29.15
18	18.00	1.059	15.755	24.77	1.636	14.532	36.89
20	20.00	1.176	17.507	30.58	1.818	16.146	45.54
22	22.00	1.294	19.257	37.00	2.000	17.760	55.10
24	24.00	1.412	21.007	44.03	2.182	19.374	65.58
26	26.00	1.529	22.759	51.67	2.364	20.988	76.96
28	28.00	1.647	24.508	59.93	2.545	22.605	89.26
30	30.00	1.765	26.258	68.80	2.727	24.219	102.47
32	32.00	1.882	28.010	78.28	2.909	25.833	116.58
34	34.00	2.000	29.760	88.37	3.091	27.447	131.61
36	36.00	2.118	31.510	99.07	3.273	29.061	147.55
42	42.00	2.471	36.761	134.84	3.818	33.905	200.84
48	48.00	2.824	42.013	176.12			
54	54.00	3.176	47.266	222.90			

This product flyer is intended for reference purposes. It should not be used in place of the advice from a licensed Professional Engineer. Pressure Ratings and Pressure Class are based on operating temperature up to 80°F. Average inside diameter is calculated using Nominal OD and Minimum Wall plus 6% for use in estimating fluid flow. Actual ID will vary. When designing components to fit the pipe ID, refer to pipe dimensions and tolerances in the applicable pipe manufacturing specification. Additional information available at www.performancepipe.com

© 2014 Chevron Phillips Chemical Company LP
Performance Pipe, a division of Chevron Phillips Chemical Company LP | 5085 W. Park Blvd | Suite 500 | Plano, TX 75093 | Phone: 800-527-0662 | Fax: 972-599-7329

HIGH DENSITY POLYETHYLENE PROCESS PIPE

PART 1 - GENERAL

1.1 DESCRIPTION

A. Scope:
   1. CONTRACTOR shall provide all labor, materials, equipment and incidentals as shown, specified and required to furnish, test, and place in satisfactory service the High Density Polyethylene (HDPE) process pipe and fittings as shown.

1.2 REFERENCES

A. Standards referenced in this Section are listed below:
   1. American Society for Testing and Materials, Inc., (ASTM).
      a. ASTM D 3261, Specification for Butt Heat Fusion Polyethylene (PE) Plastic Fittings for Polyethylene (PE) Plastic Pipe and Tubing.
      b. ASTM D 3350, Specification for Polyethylene Plastics Pipe and Fittings Materials.
      c. ASTM F 714, Specification for Polyethylene (PE) Plastic Pipe (SDR-PR) Based on Outside Diameter.
   2. American Water Works Association, (AWWA).
      a. AWWA C901, Polyethylene (PE) Pressure Pipe and Tubing, 1/2-inch through 3-inch, for Water Service.
      b. AWWA C906, Polyethylene (PE) Pressure Pipe and Fittings, 4-inch through 63-inch, for Water Distribution.

1.3 QUALITY ASSURANCE

A. Installer's Qualifications:
   1. Engage a single installer regularly engaged in HDPE process piping installation and with experience in the installation of the types of materials required; and who agrees to employ only tradesmen with specific skill and experience in this type of Work. Submit name and qualifications to ENGINEER.
   2. Engage a single installer for the entire HDPE process piping system with undivided responsibility for performance and other requirements.

C. Component Supply and Compatibility:
   1. The HDPE process pipe and fittings manufacturer shall review and approve or prepare all Shop Drawings and other submittals for all components furnished under this Section.

2. All components shall be specifically constructed for the specified service conditions and shall be integrated into the overall assembly by the HDPE process pipe and fittings manufacturer.

1.4 SUBMITTALS

A. Action Submittals: Submit the following:
   1. Product Data:
      a. Details of construction, fabrication, and pipe materials.
      b. Detailed procedures to be used in joining and installing piping system, including manufacturer's recommendations.
   2. Documentation and certifications in accordance with Part 3 of this specification.

B. Informational Submittals:
   1. Certificates:
      a. Upon shipment, CONTRACTOR shall furnish the HDPE pipe manufacturer's Quality Assurance/Quality Control (QA/QC) certifications to verify that the materials supplied for the Project are in accordance with the requirements of this Section and a manufacturer's warranty covering materials and workmanship of the HDPE piping.
   2. Suppliers Instructions:
      a. Detailed procedures to be used in joining and installing piping system, including manufacturer's recommendations.
   3. Qualifications Statements:
      a. Installer's qualifications.

PART 2 - PRODUCTS

2.1 SYSTEM PERFOMANCE

A. HDPE piping system shall be specifically designed, constructed, and installed for the service intended and shall comply with the following service conditions.

2.2 PHYSICAL PROPERTIES

A. Materials used for the manufacture of polyethylene pipe and fittings shall meet the following physical property requirements:

B. There shall be no evidence of splitting, cracking or breaking when the pipe is tested in accordance with Article 2.4, below.

C. Ring Stiffness Constant (RSC) values for the pipe can be directly related to the pipe's class designation. (Nominal RSC of Class 40 pipe = 40, etc.). The minimum RSC is 90 percent of the nominal.

D. The HDPE pipe and fittings shall be homogeneous throughout and free from visible cracks, holes, foreign inclusions or other injurious defects. The pipe shall be as uniform as commercially practical in color, opacity, density and other physical properties.

E. Clean rework or recycled material generated by the manufacturer's own production may be used as long as the pipe or fittings produced meet all the requirements of this Section.

2.3 PIPE AND FITTINGS

A. Dimensions:
   1. Pipe Dimensions: The nominal inside diameter of the pipe shall be true to the specified pipe size in accordance with AWWA C901 and AWWA C906. Standard laying lengths shall be 50 feet ± 2-inches.
   2. Fitting Dimensions: Fittings such as couplings, wyes, tees, adapters, etc. for use in laying pipe shall have standard dimensions that conform to ASTM D 3261.

B. Pipe and fittings shall be produced from identical materials, meeting the requirements of this Section, by the same manufacturer. Special or custom fittings may be exempted from this requirement.

C. Pipe and fittings shall be pressure rated to meet the service pressure requirements specified by ENGINEER. Whether molded or fabricated, fittings shall be fully pressure rated to at least the same service pressure rating as the pipe to which joining is intended.

D. Molded fittings shall meet the requirements of ASTM D 3261 and this Section. At the point of fusion, the outside diameter and minimum wall thickness of fitting butt fusion outlets shall meet the diameter and wall thickness specifications of the mating system pipe. Fitting markings shall include a production code from which the location and date of manufacture can be determined. The manufacturer shall provide an explanation of the production codes used.

F. Marking:
   1. Each standard and random length of pipe and fitting in compliance with this standard shall be clearly marked with the following information.
      a. ASTM or AWWA Standard Designation.
      b. Pipe Size.
      c. Class and Profile Number.
      d. Production Code.
      e. Standard Dimension Ratio (SDR).

PART 3 - EXECUTION

3.1 FIELD QUALITY CONTROL

A. Pipe may be rejected for failure to conform to these Specifications or following:
   1. Fractures or cracks passing through pipe wall, except single crack not exceeding 2-inches in length at either end of pipe which could be cut off and discarded. Pipes within one shipment shall be rejected if defects exist in more than five percent of shipment or delivery.
   2. Cracks sufficient to impair strength, durability or serviceability of pipe.
   3. Defects indicating improper proportioning, mixing, and molding.
   4. Damaged ends, where such damage prevents making satisfactory joint.
   5. Gouges or scrapes exceeding ten percent of the specified wall thickness.

B. Acceptance of fittings, stubs or other specifically fabricated pipe sections shall be based on visual inspection at Site and documentation of conformance to these Specifications.

C. CONTRACTOR to provide as-built of pipe end point and angle point coordinates and elevations prior to backfilling trench.

3.2 INSTALLATION

A. Heat Fusion of Pipe:
   1. HDPE pipe and fittings joints shall be heat fused by a qualified technician; trained by the manufacturer's representative in accordance with the manufacturer's recommended fusion procedures. Training must have occurred within the previous 12 months, or submittals verifying experience within the previous 12 months for all technicians performing heat fusion on polyethylene pipe and fittings.
   2. Weld in accordance with manufacturer's recommendation for butt fusion methods. Personnel operating fusion equipment shall be certified by the HDPE pipe manufacturer.
   3. The first butt fusion weld of each day's production welding and for each separate operator shall be tested by bent strap test method. No production welds shall be performed until successful completion of bent strap test.
   4. Butt fusion equipment for joining procedures shall be capable of meeting conditions recommended by HDPE pipe manufacturer including, but not limited to, temperature requirements, alignment, and fusion pressures. The equipment used for the heat fusion joints shall be capable of recording the heating and fusion pressures used to join the HDPE pipe, recording heater temperature, and storing this information for future retrieval (data logger). Each field fusion shall be recorded by such equipment and this information shall be made compiled into daily log reports. Log reports shall be submitted

to CONTRACTOR and ENGINEER daily. Reports shall also include the results of the bent strap tests.

5. For cleaning pipe ends, solutions such as detergents and solvents, when required, shall be used in accordance with manufacturer's recommendations.
6. Do not bend pipe to greater degree than minimum radius recommended by manufacturer for type and grade. Shop Drawings shall address locations and deflections of required fittings to prevent installation that exceeds a greater degree of bending than the manufacturer's recommended minimum bending radius for each size and class of HDPE pipe.
7. Do not subject pipe to strains that will overstress or buckle piping or impose excessive stress on joints.
8. Branch saddle fusions shall be joined in accordance with manufacturer's recommendations and procedures. Branch saddle fusion equipment shall be of size to facilitate saddle fusion within trench.
9. Before butt fusing pipe, inspect each length for presence of dirt, sand, mud, shavings, and other debris or animals. Remove debris from pipe.
10. Cover open ends of fused pipe at the end of each day's Work. Cap to prevent entry by animals or debris.

B. Flange Jointing:
   1. Use on flanged pipe connection sections.
   2. Connect slip-on Type 316 stainless steel backup flanges with Type 316 stainless steel nuts and bolts.
   3. Butt fuse fabricated flange adapters to pipe.
   4. Observe following precautions in connection of flange joints.
      a. Align flanges or flange/valve connections to provide tight seal. Require nitrile-butadiene gaskets if needed to achieve seal. Integral flange adapters and gaskets are required for flange/valve connections.
      b. Place U.S. Standard round washers as may be required on some flanges in accordance with manufacturer's recommendations. Bolts shall be lubricated in accordance with manufacturer's recommendations.
      c. Tighten flange bolts in sequence and accordance with manufacturer's recommendations. CAUTION: Do not over-torque bolts.
   5. Pull bolt down by degrees to uniform torque in accordance with manufacturer's recommendation.
   6. Install electrofusion couplers, where used, in accordance with manufacturer's specifications.

C. Pipe Placement:
   1. Grade control equipment shall be of type to accurately maintain design grades and slopes during installation of pipe.
   2. Dewatering: Remove standing water in trench before pipe installation.
   3. Unless otherwise specifically stated, install pipe in accordance with manufacturer's recommendations.

4. Maximum lengths of fused pipe to be handled as one section shall be placed according to manufacturer's recommendations as to pipe size, pipe SDR, and topography so as not to cause excessive gouging or surface abrasion, but shall not exceed 400 feet.
5. Cap pipe sections longer than single joining (usually 50 feet) on both ends during placement, except during fusing operations.
6. Notify ENGINEER prior to installing pipe into trench and allow time for ENGINEER'S inspection.
    a. Correct irregularities found during inspection.
7. Complete tie-ins within trench whenever possible to prevent overstressed connections.
8. Allow pipe sufficient time to adjust to trench temperature prior to testing, segment tie-ins or backfilling activity.
9. Install reducers adjacent to laterals and tees.
10. To reduce branch saddle stress, install saddles at slope equal to and continuous with lateral piping.
11. Pipe shall be snaked in trench to allow a minimum of 12-inches/100 feet for thermal contraction and expansion.
12. Allow extra length at future connection points to be cut to fit after backfill and prior to tie-in.

D. Saddle tees 8-inches and smaller may be field fabricated. Field fabrication may only be performed by persons trained and certified by the manufacturer. Submit certification of qualified persons before fabricating any saddle tees. Saddle tees larger than 8-inches must be factory manufactured.

3.3 LEAKAGE TESTS

A. CONTRACTOR shall perform integrity testing of all piping to ensure that all joining, and pipe material is in in accordance with these specifications. CONTRACTOR must test all assembled piping and fittings to points of connection as indicated on Drawings or to limits of piping installed by others such as Ion Exchange unit, Granular Activated Carbon unit, Fluidized Bed Reactor unit piping.

Prior to application of test pressure, remove or valve off instrumentation, which may be damaged by extreme test conditions, and install a calibrated test gage in the system.

Materials and equipment shall be subject to inspection at the installation site by the ENGINEER.

Valves shall be tested in the open position only. CONTRACTOR shall be responsible for blinding and/or plugging all valves as required.

All material, except water, required for hydrostatic testing, shall be supplied by CONTRACTOR. This shall include storage and transport, pump, gauges, pipe, steel plugs, caps, blinds, flanges, gaskets, bolts, fittings, and valves.

Each integrity test shall be conducted using the conditions summarized below.

Hydrostatic test pressure shall be recorded at the beginning of the test, at intervals no less than 0.1 times the total duration of the test, and at the end of the test by the CONTRACTOR. All testing shall be documented in the Hydrostatic Testing Inspection Log at the end of this document.

In the event a leak is present, it shall be located, repaired and the test shall be performed again. Corrective actions shall be documented in the Hydrostatic Testing Inspection Log.

The maximum length for a testing segment shall be 1,000 linear feet.

The maximum permissible test pressure is measure at the lowest elevation in the test section. The maximum permissible test pressure shall be 125% of the maximum operating pressure (MOP).

Test pressure must be reduced when the test section is at elevated temperature either from service conditions or from environmental conditions such as being warmed by the sun. Multiply the test pressure by the factors in the table below to determine the allowable elevated temperature test pressure.

Test Section Temperature °F	≤ 80	≤ 90	≤ 100	≤ 110	≤ 120	≤ 130	≤ 140
Multiplier	1.00	0.90	0.80	0.75	0.65	0.60	0.50
Use the 80 °F multiplier for 80 °F and lower temperatures. The maximum service temperature is 140 °F.							

The hydrostatic test procedure consists of filling, an initial expansion phase, a test phase, and depressurizing.

Gradually pressurize the test section to test pressure, and maintain for three (3) hours. During the initial expansion phase, polyethylene pipe will expand slightly. Additional test liquid will be required to maintain pressure. It is not necessary to monitor the amount of water added during initial expansion phase.

Immediately following the initial expansion phase, monitor the amount of make-up water required to maintain test pressure for three (3) hours. If the amount of make-up water needed to maintain test pressure does not exceed the amount in the table below, no leakage is indicated, and the test section is accepted. If a section is

not accepted and a leak is detected the leak will be located, repaired, and the test will be repeated after the section has been depressurized for eight (8) hours. Record all tests in the Hydrostatic Testing Inspection Log.

Make-Up Water Allowance for the Test Phase (U.S. Gal/100 ft of pipe)	
Nominal Pipe Size (in)	3-Hour Test
1-1/4	0.16
1-1/2	0.17
2	0.19
3	0.25
4	0.40
5-3/8	0.58
5	0.62
6	0.9
7-1/8	1.0
8	1.5
10	2.1
12	3.4
13-3/8	3.7
14	4.2
16	5.0
18	6.5
20	8.0
22	10.5
24	13.3
26	15.0
28	16.8
30	19.2
32	21.5
34	24.3
36	27.0
42	35.3
48	43.0
54	51.7

UPCO Hydrostatic Testing Field Log

Date	Pipe Section	Start Pressure (psi)	Start Time	Stop Pressure (psi)	End Time	Corrective Action Taken	Accepted (Y/N)	Contractor Signature	Inspector Signature	Notes

APPENDIX C

MAG Specification 601

SECTION 601

TRENCH EXCAVATION, BACKFILLING AND COMPACTION

601.1 DESCRIPTION:

The work covered by this specification consists of furnishing all labor, equipment, appliances, materials, and performing all operations in connection with the excavation, backfilling and compaction of trenches for pipe installations.

Excavation for appurtenance structures, such as manholes, inlets, transition structures, junction structures, vaults, valve boxes, catch basins, etc., shall be deemed to be in the category of trench excavation.

The Trench Cross-Section Detail shown on Detail 200-2 illustrates the terminology used in this specification.

See Section 620 for cast-in-place concrete pipe.

Pipe materials that are considered to be rigid include reinforced concrete pipe, non-reinforced concrete pipe, reinforced concrete cylinder pipe, vitrified clay pipe, steel casings, cast iron, and ductile iron pipe.

Pipe materials that are considered to be flexible include thermoplastic pipes (HDPE, SRPE, PP, PVC) and corrugated metal pipe.

601.2 EXCAVATION:

601.2.1 General: The Contractor shall perform all excavation of every description and of whatever substances encountered, to the depths indicated on the plans, and including excavation ordered by the Engineer of compacted backfill for the purpose of making density tests on any portion of the backfill.

601.2.2 Trench Widths: Trenches for a single pipe shall conform to the dimensions in Table 601-1. Multiple pipe installations in a single trench shall be installed in accordance with details on the plans or in the special provisions.

Table 601-1 TRENCH WIDTHS

Size of Pipe (Nom. Dia.)	Maximum Width at Top of Pipe Greater Than O.D. of Bell	Minimum Width at Springline Each Side of Pipe Barrel
Rigid Pipes:		
Less than 18 inches	16 inches	6 inches
18 inches to 24 inches inclusive	19 inches	7.5 inches
27 inches to 39 inches inclusive	22 inches	9 inches
42 inches to 60 inches inclusive	30 inches	12 inches
66 inches to 78 inches inclusive	42 inches	15 inches
84 inches to 96 inches inclusive	50 inches	19 inches
102 inches to 120 inches inclusive	60 inches	24 inches
Flexible Pipes:		
Less than 18 inches	20 inches	8 inches
18 inches to 24 inches inclusive	23 inches	9.5 inches
27 inches to 39 inches inclusive	28 inches	12 inches
42 inches to 60 inches inclusive	34 inches	14 inches
66 inches to 78 inches inclusive	44 inches	16 inches
84 inches to 96 inches inclusive	48 inches	18 inches
102 inches to 120 inches inclusive	54 inches	21 inches

The width of the trench shall not be greater than the maximum indicated in Table 601-1, at and below the level of the top of the pipe. The width of the trench above that level may be made as wide as necessary for shoring, bracing, and for proper installation of the work.

If the maximum trench width as specified in Table 601-1 is exceeded at the top of the pipe, additional load bearing capacity to compensate for the increased pipe loading may be required by the Engineer. The Contractor shall provide, at no additional cost to the Contracting Agency, the additional load bearing capacity. This may require changing the material requirements of initial backfill, a higher strength pipe, a concrete cradle, cap or encasement, or other means approved in writing by the Engineer. Where safety or undermining situations occur, a controlled low strength material (CLSM) backfill as specified in Sections 604 and 728 may be used as needed.

601.2.3 Trench Grade: Alignment and elevation stakes shall be furnished by the Contractor at set intervals and agreed upon offsets. On water main projects, elevation stakes will be furnished only when deemed necessary by the Engineer. In all cases where elevation stakes are furnished, the Contractor will also furnish the Engineer with cut sheets.

For all pipe 12 inches or greater in diameter, the Contractor shall excavate for and provide a bedding at least 4 inches thick or 1/12 the O.D. of the pipe barrel whichever is greater. This bedding material shall be placed at a uniform density with minimum compaction and fine graded as specified herein.

601.2.4 Fine Grading: The bedding or the bottom of the trench when bedding is not required shall be accurately graded to provide uniform bearing and support for each section of the pipe at every point along its entire length, except for portions of the pipe where it is necessary to excavate for bells or other joint types and for proper sealing of the pipe joints.

601.2.5 Over-excavation: Except at locations where excavation of rock from the bottom of the trench is required, care shall be taken not to excavate below the depth needed to accommodate the required bedding depth.

Unauthorized excavation below the specified trench grade line shall be refilled at the Contractor's expense with ABC material compacted to a uniform density of not less than 95 percent of the maximum density as determined by AASHTO T-99 and T-191 or ASTM D6938. When AASHTO T-99, method A or B, and T-191 are used for density determination, ARIZ 227c will be used for rock correction.

Whenever rock is encountered in the trench bottom, it shall be over-excavated to a minimum depth of six inches below the bottom of the pipe barrel. This over-excavation shall be filled with bedding material placed with the minimum possible compaction.

Whenever unsuitable soil incapable of supporting the pipe is encountered, the Contractor will notify the Engineer and a field determination will be made as to the depth of over-excavation and the granular fill required.

601.2.6 Excavation for Manholes, Valves, Inlets, Catch Basins and Other Accessories: The Contractor may place concrete directly against excavated surfaces for cast-in-place items, provided that the faces of the excavation are firm, unyielding, and are at all points outside the structure lines shown on the plans. If the native material is such that it will not stand without sloughing or if precast structures are used, the Contractor shall excavate as needed to place bracing, shoring, and forms or to place the precast structure.

Any unnecessary excavation below the elevation indicated for the foundation of any structure shall be replaced with the same class of concrete specified for the structure or with 1 1/2 sack controlled low strength material as specified in Section 728. When the replacement material is structural concrete, the material shall be placed at the same time as the structure. However, when using 1½ sack controlled low strength material, placement of the material shall be per Section 604 which requires a time lag between placement of the controlled low strength material and the structural concrete. The placement of the additional material shall be at no cost to the Agency.

601.2.7 Pavement and Concrete Cutting and Removal: Where trenchless methods are not used and trenches or other excavations lie within the portland cement concrete section of streets, alleys, driveways, or sidewalks, etc., such concrete shall be completely removed between the closest adjacent joints. Removal methods shall produce neat, straight lines in such a manner that the remaining adjoining concrete will not be damaged.

Sidewalk, curb, gutter, and other concrete flatwork shall have complete joint to joint replacement of all damaged sections. The construction replacing damaged concrete sections and joints shall be compliant with Section 340.

The existing joint system in portland cement concrete pavement (PCCP) shall be maintained. Reconstruction of PCCP panels and joints shall be in accordance with Section 324.

Initial asphalt pavement removal shall be clean-cut to be the minimum width required for conduit installation and proper trench compaction. No ripping or rooting will be permitted outside the pavement cut limits. Surfacing materials removed shall be hauled from the job site immediately, and will not be permitted in the backfill.

Final pavement removal for pavement matching and surface replacement shall occur after the final backfill and the aggregate base material are in place and compacted. Pavement matching and final surface replacement shall be in accordance with the requirements of Section 336.

601.2.8 Grading and Stockpiling: All grading in the vicinity of trench excavation shall be controlled to prevent surface water from flowing into the trenches. Any water accumulated in the trenches shall be removed by pumping or by other approved methods.

During excavation, material suitable for backfilling shall be placed in an orderly manner, a sufficient distance back from the edges of trenches, to avoid overloading and to prevent slides or cave-ins. Material unsuitable for backfilling, or excess material, shall be hauled from the job site and disposed of by the Contractor.

The Contractor shall, prior to commencement of the work, submit a letter to the Contracting Agency stating the location of each disposal site for all excess or unsuitable material and certify that he has obtained the property owner's permission for the disposal of all such materials.

Where the plans and/or special provisions provide for segregation of topsoil from underlying material for purposes of backfill, the material shall not be mixed.

601.2.9 Shoring and Sheathing: The Contractor shall do such trench bracing, sheathing, or shoring necessary to perform and protect the excavation as required for safety and conformance to governing laws. The bracing, sheathing, or shoring shall not be removed in one operation but shall be done in successive stages to prevent overloading of the pipe during backfill operations. The cost of the bracing, sheathing, or shoring, and the removal of same, shall be included in the unit price for the pipe or other item which necessitated the work.

All shoring and sheathing deemed necessary to protect the excavation and to safeguard employees, shall be installed. See Section 107.

601.2.10 Open Trench: Except where otherwise noted in the special provisions, or approved in writing by the Engineer, the maximum length of open trench, where the construction is in any stage of completion (excavation, pipe laying or backfilling), shall not exceed 1320 feet in the aggregate at any one location.

Any excavated area shall be considered open trench until all ABC for pavement replacement has been placed and compacted. With the approval of the Engineer, pipe laying may be carried on at more than one location, the restrictions on open trench applying to each location. Trenches across streets shall be completely backfilled as soon as possible after pipe laying.

Substantial steel plates with adequate trench bracing shall be used to bridge across trenches at street crossings where trench backfill and temporary patches have not been completed during regular work hours. Steel plates shall be installed in accordance with Detail 211. Safe and convenient passage for pedestrians shall be provided. The Engineer may designate a passage to be provided at any point he deems necessary. Access to hospitals, fire stations and fire hydrants shall be maintained at all times. Steel plates with adequate trench bracing shall be used to bridge across trenches as needed to provide driveway access to adjacent properties where trench backfill and temporary patches have not been completed during regular work hours.

601.3 PROTECTION OF EXISTING UTILITIES:

601.3.1 Utilities: Unless otherwise shown on the plans or stated in the specifications, all utilities, either underground or overhead, shall be maintained in continuous service throughout the entire contract period. The Contractor shall be responsible and liable for any damages to or interruption of service caused by the construction.

If the Contractor desires to simplify his operation by temporarily or permanently relocating or shutting down any utility or appurtenance, he shall make the necessary arrangements and agreements with the owner and shall be completely responsible for all costs concerned with the relocation or shutdown and reconstruction. All property shall be reconstructed in its original or new location as soon as possible and to a condition at least as good as its previous condition. This cycle of relocation or shutdown and reconstruction shall be subject to inspection and approval by both the Engineer and the owner of the utility.

The Contractor shall be entirely responsible for safeguarding and maintaining all conflicting utilities that are shown on the plans (Sections 107 and 105 apply). This includes overhead wires and cables and their supporting poles whether they are inside or outside of the open trench. If, in the course of work, a conflicting utility line that was not shown on the plans is discovered, the Contracting Agency will either negotiate with the owner for relocation, relocate the utility, change the alignment and grade of the trench or as a last resort, declare the conflict as "extra work" to be accomplished by the Contractor in accordance with Section 104.

Backfill, around utilities that are exposed during trench excavation, shall be placed in accordance with the utility's haunching and initial backfill requirements.

601.3.2 Irrigation Ditches, Pipes and Structures: The Contractor shall contact the owners of all irrigation facilities, and make arrangements for necessary construction clearances and/or dry-up periods.

All irrigation ditches, dikes, headgates, pipe, valves, checks, etc., damaged or removed by the Contractor, shall be restored to their original condition or better, by the Contractor at no additional cost to the Contracting Agency.

601.3.3 Building Foundations and Structures: Where trenches are located adjacent to building foundations and structures, the Contractor shall take all necessary precaution against damage to them. The Contractor shall be liable for any damage caused by the construction.

Except where authorized in the special provisions or in writing by the Engineer, water settling of backfill material in trenches adjacent to structures will not be permitted.

601.3.4 Permanent Pipe Supports: Permanent pipe supports for the various types and sizes of sewer, water and utility lines shall conform to the Standard Details or the details shown on the plans. Such pipe supports shall be erected at the locations shown on the plans and/or at any other location as necessary as determined by the Engineer.

601.4 FOUNDATION, BEDDING, HAUNCHING, BACKFILLING AND COMPACTION:

601.4.1 Foundation: The bottom of an excavation upon which a structure is to be placed or the bottom of a trench where the elevation is set below the pipe elevation shown on the plans or as directed by the Engineer. The elevation of the trench foundation is determined from the desired pipe elevation by taking into account the bedding and pipe wall thicknesses. The foundation surface will consist of native material or replacement material required due to over-excavation.

601.4.2 Bedding: Bedding is the material upon which a pipe is to be placed.

The bedding material type shall be ABC per Section 702 unless otherwise specified.

601.4.3 Haunching: Haunching is the material placed between the bedding and springline. If placed in lifts, the lift thickness shall not exceed 2 feet (1 foot for flexible pipe) and shall be deposited and compacted to the specified density uniformly on each side of the pipe to prevent lateral displacement of the pipe.

The haunching material shall be ABC per Section 702. With Agency approval an alternative granular material or CLSM may be used.

601.4.4 Initial Backfill: The material placed between the springline to 12 inches above top of pipe. Initial backfill shall be placed in lifts that shall not exceed 2 feet (1 foot for flexible pipe) and which can be effectively compacted depending on the type of material, type of equipment, and methods used.

Initial backfill material shall be ABC per Section 702. With Agency approval an alternative granular material or CLSM may be used, and with agency approval native backfill with no piece larger than 1½ inches may be used for concrete pipe.

601.4.5 Final Backfill: Material placed above the initial backfill to the top of the trench or to the bottom of the road base material. Final backfill shall be placed in horizontal layers not more than twelve inches in depth before compaction. With Agency approval an increase in the loose non-compacted lift depth may be obtained for a project based on specific equipment, methods, and soil conditions. For approval of an increase of the non-compacted lift depth the Contractor shall demonstrate to the satisfaction of the Agency that the required density will be obtained using the Contractor identified equipment and methods. The non-compacted lift height shall not be more than can be compacted to the required density with the equipment and methods being used.

Final backfill shall be CLSM per Section 604, ABC per Section 702, and/or granular material or native backfill material per Section 601.4.8.

Backfill under street pavement shall be constructed per Detail 200-1 with the type of trench and surface replacement as noted on the plans or in the special provisions. Unless otherwise noted, backfill under single curb, curb and gutter, attached sidewalk, driveways, valley gutters, etc. shall be the same as the adjacent street pavement.

601.4.6 Compaction Densities: Trench backfill shall be thoroughly compacted to not less than the densities shown in Table 601-2 when tested and determined by AASHTO T-99 and T-191 or ASTM D6938. When AASHTO T-99, method A or B, and T-191 are used for density determination, ARIZ-227c shall be used for rock correction.

Backfill material shall be within 2 percentage points of its optimum moisture content while being compacted.

When backfill material is CLSM and it is placed in accordance with Section 604, no compaction testing is required, the compaction density shall be deemed acceptable.

TABLE 601-2
MINIMUM TRENCH COMPACTION DENSITIES

Backfill Type	Location	From Surface To 2 feet Below Surface	From 2 feet Below Surface To 1 foot Above Top of Pipe	From 1 foot Above Top of Pipe to Bottom of Pipe
I	Under any existing or proposed pavement, curb, gutter, attached sidewalk, roadway shoulders, and other areas within right-of-way subject to vehicular traffic, or when any part of the trench excavation is within 2-feet of the existing pavement, curb, or gutter.	100% for granular 95% for non-granular	95%	95%
II	On any utility easement or right-of-way outside limits of Type I backfill.	85%	85%	90%
III	Around any structures (manholes, etc.) or exposed utilities outside limits of Type I backfill.	95% in all cases		

601.4.7 Water Consolidation: Jetting is the only acceptable water consolidation method and its use is restricted. Jetting may only be used in Type I Backfill for the haunching and initial backfill zones and in Type II Backfill locations as defined in Table 601-2.

Water consolidation by jetting shall use a 1 1/2 inch pipe of sufficient length to reach the bottom of the lift being settled and shall have a water pressure of not less than 30 psi. All jetting shall be accomplished transversely across the trench at intervals of not more than 6 feet with the jetting locations on one side of the trench offset to the jetting locations on the other side of the trench. The entire lift shall be leveled and completely saturated working from the top to the bottom.

When jetting is used within the haunching and initial backfill zones, the Contractor shall be responsible for establishing each lift depth so as to avoid floating the pipe being placed and shall make any needed repair or replacement at no cost to the Contracting Agency. For pipes larger than 24 inches I.D. the first lift shall not exceed the springline of the pipe and subsequent lifts shall not exceed 3 feet.

Where jetting is used and the surrounding material does not permit proper drainage, the Contractor shall provide, at his expense a sump and a pump at the downstream end to remove the accumulated water.

The use of water consolidation does not relieve the Contractor from the responsibility to make his own determination that such methods will not result in damage to existing improvements. The Contractor shall be responsible for any damage incurred.

If jetting does not obtain the required compaction density, mechanical compaction methods shall be used to meet the compaction requirements. Water consolidated backfill material may need to be removed and replaced.
Jetting within Type I backfill locations shall not be used unless the material in which the trench is located and the backfill are both granular material. No exception shall be made for construction within new developments.

601.4.8 Granular Material and Native Backfill Material: For purposes of this specification, granular material is material for which the sum of the plasticity index and the percent of the material passing a No. 200 sieve does not exceed 23. The plasticity index shall be tested in accordance with AASHTO T-146 Method A (Wet Preparation), T-89 and T-90. The percent of the material passing a No. 200 sieve shall be tested in accordance with ASTM C136 and ASTM C117.

Native material used for backfill shall be sound earthen material free from broken concrete, broken pavement, wood or other deleterious material with no piece larger than 4 inches.

601.4.9 Rights-Of-Way Belonging to Others: Backfill and compaction for irrigation lines of the Salt River Valley Water Users' Association and Roosevelt Irrigation Districts and for trenches in State of Arizona or another entity's right-of-way outside the limits of the Contracting Agency shall be accomplished in accordance with their permit and/or specifications.

601.4.10 Test Holes: Boring logs shown on the plans do not constitute a part of the contract and are included for the Contractor's convenience only. It is not intended to imply that the character of the material is the same as that shown on the logs at any point other than that where the boring was made. The Contractor shall satisfy himself regarding the character and amount of rock, gravel, sand, silt, clay and water to be encountered in the work to be performed.

601.4.11 Bedding and Backfilling for Electronic, Telephonic, Telegraphic, Electrical, Oil and Gas Lines: The bedding and backfill for these underground facilities shall be native material or sand which conforms to the grading requirement of ASTM C33 for fine aggregate. When backfill material consists of aggregate base course, crushed stone, or other material containing stones, only sand will be used within the bedding, haunching, and initial backfill zones. The bedding depth shall be six inches. Compaction shall be in accordance with Table 601-2.

601.5 CONTRACTOR CERTIFICATION OF INSTALLATION PROCEDURES:

When requested in the Special Provisions or by the Engineer prior to installation, the Contractor shall furnish to the Contracting Agency an affidavit (certification) from the pipe manufacturer (or his designee) stating that the Contractor is familiar with the manufacturer's suggested installation methods and procedures and the manufacturer's suggested installation methods and procedures are consistent with MAG requirements.

When required by the Special Provisions, the pipe manufacturer or his designee will review the Contractor's methods and procedures for pipe installation in the field. The Contractor will make any adjustments in the installation as recommended by the manufacturer or his representative. If necessary, the Contractor may be required to reinstall or provide corrections to pipe installed prior to the field review at no cost to the Agency. Once the manufacturer or his representative has reviewed the Contractor's installation methods and the Contractor has adjusted his installation methods as recommended by the same, the manufacturer or his representative shall furnish to the Contracting Agency an affidavit (certification) that the Contractor's installation methods and procedures, at the time of the review, complied with the manufacturer's installation practices. The

affidavit must provide the name of the manufacturer's representative witnessing the pipe installation.

601.6 PAVEMENT REPLACEMENT AND SURFACE RESTORATION:

601.6.1 Grading: The Contractor shall do such grading in the area adjacent to backfilled trenches and structures as may be necessary to leave the area in a neat and satisfactory condition approved by the Engineer.

601.6.2 Restoring Surface: All streets, alleys, driveways, sidewalks, curbs, or other surfaces, in which the surface is broken into or damaged by the installation of the new work, shall be resurfaced in kind or as specified to the satisfaction of the Engineer in accordance with Section 336.

601.6.3 Cleanup: The job site shall be left in a neat and acceptable condition. Excess soil, concrete, etc., shall be removed from the premises.

601.6.4 Temporary Pavement: The Contractor shall install temporary asphalt pavement or the first course of permanent pavement replacement in accordance with Section 336 immediately following backfilling and compaction of trenches that have been cut through existing pavement. Except as otherwise provided in Section 336, this preliminary pavement shall be maintained in a safe and reasonably smooth condition until required backfill compaction is obtained and final pavement replacement is ordered by the Engineer. Temporary paving removed shall be hauled from the job site and disposed of by the Contractor at no additional cost to the Contracting Agency.

601.7 PAYMENT:

No pay item will be included in the proposal or direct payment made for trench excavation, backfilling, compaction, or placement of temporary pavement. The cost of these features of the work shall be included in the unit price per linear foot for furnishing and laying pipe.

- End of Section -

APPENDIX D

MAG Specification 728

SECTION 728

CONTROLLED LOW STRENGTH MATERIAL

728.1 GENERAL:

Controlled Low Strength Material (CLSM) is a mixture of cementitious materials, aggregates, admixtures\additives, and water that, as the cementitious materials hydrate, forms a soil replacement. CLSM is a self-compacting, flowable, cementitious material primarily used as a backfill, structural fill, or a replacement for compacted fill or unsuitable native material. Placement and usage of each type of CLSM is described in Section 604.

728.2 MATERIALS:

Cementitious materials shall conform to Section 725.2.

Coarse aggregate shall conform to ASTM C33 grading size No. 57. The size and gradation of fine aggregates (sand) shall conform to ASTM C33. Alternate materials meeting the applicable requirements of Section 701 or 702 such as combinations of other aggregates, Aggregate Base Course (ABC) or Reclaimed Concrete Material (RCM) may be used to replace the required coarse and fine aggregate as long as the approved mix design meets the requirements of Table 728-1 and is approved by the Engineer.

Water shall conform to Section 725.4

728.3 PROPORTIONING OF MIXTURES AND PRODUCTION TOLERANCES:

Proportioning of the mixture shall comply with Section 725.6 and Table 728-1. The CLSM shall have consistency, workability, plasticity, and flow characteristics such that the material when placed is self-compacting. A minimum of 40% coarse aggregate shall be used. A mix design shall be submitted for the Engineer's approval prior to the excavation for which the material is intended for use. Sampling shall be in accordance with ASTM D5971. The flow consistency shall be tested in accordance with ASTM D6103-04. Unit weight (when applicable) shall be obtained by ASTM D6023. Compressive strength shall be tested in accordance with ASTM D4832.

TABLE 728-1

CONTROLLED LOW STRENGTH MATERIAL REQUIREMENTS

Portland Cement Content, Sack/cu yd	Flow, inches
1/2 Sack	9±2
1 Sack	9±2
1 1/2 Sack	9±2
2 Sack	9±2

Notes for Table 728-1:
(1) CLSM mixes meeting the table requirements will not generally be placeable by means of a concrete pump or may not provide the needed workability for certain conditions. When pumpable mixes or increased workability are required, the addition of fly ash or a natural pozzolan in excess of the required Portland Cement Content may be used.
(2) Ready-mixed structural concrete or grout shall not be used in lieu of CLSM without prior approval from the Engineer and shall be subject to rejection.

728.4 MIXING:

CLSM mixing shall comply with Section 725.7 Mixing shall continue until the cementitious material and water are thoroughly dispersed throughout the material. Mixes shall be homogenous, readily placeable and uniformly workable.

End of Section -

SECTION 729

EXPANSION JOINT FILLER

729.1 PREMOLDED JOINT FILLER:

Expansion joint filler materials shall consist of preformed strips of a durable resilient compound and comply with ASTM D1751, D1752, or D2628, as specified by the Contracting Agency or as approved by the Engineer.

729.2 POUR TYPE JOINT FILLERS FOR PORTLAND CEMENT CONCRETE PAVING (PCCP):

Pour type joint fillers shall comply with ASTM D3406 or as approved by the Engineer. Joint sealant shall not contain any coal tar materials. The following requirement shall be added to paragraphs 7.1 of ASTM D3406:

The minimum ambient temperature during application and ambient temperatures under various storage conditions shall be clearly marked on the container.

729.3 TEST REPORT AND SHIPMENT CERTIFICATE:

When requested by the Engineer, each shipment shall be accompanied by a Certificate of Compliance that the material complies with the above specifications.

- End of Section -

APPENDIX E

Bill of Materials

Table 1. Bill of Materials, Major Equipment

ITEM #	SHEET	TAG	QTY	EQUIPMENT	DESCRIPTION	SIZE	Manufacturer	MODEL / PART NO.	NOTES
1	P-2	P-101	1	Pump	EW-01 Extraction Pump	3.0 HP	Grundfos	25S30-15	25S30-15, 3.0 HP, 13 gpm max, 3450 rpm, SS pump and impeller, 1-1/2" NPT outlet, 4" diameter motor
2	P-2	P-102	1	Pump	EW-02 Extraction Pump	7.5 HP	Grundfos	45S75-15	45S75-15, 7.5 HP, 58 gpm max, 3450 rpm, SS pump and impeller, 2" NPT outlet , 4" diameter motor
3	P-2	P-103	1	Pump	IW-01 Extraction Pump	3.0 HP	Grundfos	25S30-15	25S30-15, 3.0 HP, 13 gpm max, 3450 rpm, SS pump and impeller, 1-1/2" NPT outlet, 4" diameter motor
4	P-2	P-104	1	Pump	MW-20 Extraction Pump	1.5 HP	Grundfos	10S15-21	10S15-21, 1.5 HP, 13 gpm max, 3450 rpm, SS pump and impeller, 1-1/4" NPT outlet, 4" diameter motor
5	P-4	T-200	1	Tank	T-200 Influent Equalization Tank	3,900 GAL	Snyder	ASM TK 3900VDT X 90	Flat Bottom, vertical, HDLPE, 90" diameter, 161.1" height
6	P-4	P-201	1	Pump	P-201 FBR Transfer Pump	5.5 HP	Grundfos	CR 15-2 A-B-A-E-HQQE	5.5 HP, 125 gpm max, 3461 rpm, Cast Iron pump and SS impeller, 2" connection
7	P-4	T-210	1	Tank	T-210 Cone Bottom Backwash Conditioning	13,000 GAL	Snyder	7490100N & 79500000	Cone bottom w/ stand, vertical, HDLPE, 142" diameter, 261.4" height
8	P-4	P-211	1	Pump	P-211 Backwash Decant Pump	5.5 HP	Grundfos	CR 15-2 A-B-A-E-HQQE	5.5 HP, 125 gpm max, 3461 rpm, Cast Iron pump and SS impeller, 2" connection
9	P-4	P-003	1	Pump	Treatment Building Sump Pump	1.5 HP	Zoeller	D188	1.5 HP, 100 gpm @ 30 TDH, Submersible Pump
10	P-5	P-004	1	Pump	FBR Containment Sump Pump	1.5 HP	Zoeller	D188	1.5 HP, 100 gpm @ 30 TDH, Submersible Pump
11	P-5	A-900	1	Air Compressor	Plant Air Compressor	20 HP	Ingersoll Rand	UP6S-20	20 HP, 125 psi max, 77 cfm, 1,183 lbs, with integrated dryer option and 120 gal Tank-mounted version
12	P-6	P-401	1	Pump	P-401 Filtration Transfer Pump	7.5 HP	Grundfos	CR 15-3 A-B-A-E-HQQE	7.5 HP, 125 gpm max, 3461 rpm, Cast Iron pump and SS impeller, 2" connection
13	P-6	T-400	1	Tank	T-400 Cone Bottom Effluent Equalization Tank	3,000 GAL	Snyder	5150000N & 79300000	Cone bottom w/ stand, vertical, HDLPE, 90" diameter, 162.4" height
14	P-6	T-501	1	Multi-Media Filter	T-501 Multi-Media Filter	2.5' diameter	Yardney	MM 3060 -1A	Flow Rate 25-98 GPM, Backwash 15 GPM/FT^2 (75 gpm), Maximum Pressure 100 PSI
15	P-7	T-601	1	IEX Vessel	T-601 IEX Vessel	2,000 lbs	Prominent	AQUASORB 2000	100 gpm max, 75 psi max, 3,300 lbs operating, Resintech SBG1 Resin
16	P-7	T-602	1	IEX Vessel	T-602 IEX Vessel	2,000 lbs	Prominent	AQUASORB 2000	100 gpm max, 75 psi max, 3,300 lbs operating, Resintech SBG1 Resin
17	P-7	T-603	1	IEX Vessel	T-603 IEX Vessel	2,000 lbs	Prominent	AQUASORB 2000	100 gpm max, 75 psi max, 3,300 lbs operating, Resintech SIR-110-HP Resin
18	P-7	T-604	1	IEX Vessel	T-604 IEX Vessel	2,000 lbs	Prominent	AQUASORB 2000	100 gpm max, 75 psi max, 3,300 lbs operating, Resintech SIR-110-HP Resin
19	P-8	F-801	1	Bag Filter	F-801 Bag Filter	3"	Eaton	MFBF202XS	150 psi max, 25 micron bag filters, 3" Connection
20	P-8	F-802	1	Bag Filter	F-802 Bag Filter	3"	Eaton	MFBF202XS	150 psi max, 25 micron bag filters, 3" Connection
21	P-8	T-801	1	GAC Vessel	T-801 GAC Vessel	1,000 lbs	Prominent	AQUASORB 1000	90 gpm max, 60 psi max, 3,100 lbs operating, 12 x 40 Mesh Coconut Shell GAC
22	P-8	T-802	1	GAC Vessel	T-802 GAC Vessel	1,000 lbs	Prominent	AQUASORB 1000	90 gpm max, 60 psi max, 3,100 lbs operating, 12 x 40 Mesh Coconut Shell GAC
23	P-8	T-803	1	GAC Vessel	T-803 GAC Vessel	1,000 lbs	Prominent	AQUASORB 1000	90 gpm max, 60 psi max, 3,100 lbs operating, 12 x 40 Mesh Coconut Shell GAC
24	P-9	T-700	1	Tank	T-700 Injection Equalization Tank	3,900 GAL	Snyder	ASM TK 3900VDT X 90	Flat Bottom, vertical, HDLPE, 90" diameter, 161.1" height
25	P-9	P-701	1	Pump	P-701 Injection Pump	7.5 HP	Grundfos	CR 15-4 A-B-A-E-HQQE	7.5 HP, 125 gpm max, 3467 rpm, Cast Iron pump and SS impeller, 2" connection
26	P-9	P-501	1	Pump	P-501 Clean Backwash Pump	7.5 HP	Grundfos	CR 15-3 A-B-A-E-HQQE	7.5 HP, 125 gpm max, 3461 rpm, Cast Iron pump and SS impeller, 2" connection

Table 2. Bill of Materials, VENDOR-Provided Equipment

ITEM #	SHEET	TAG	QTY	EQUIPMENT	DESCRIPTION
1	P-5	T-300	1	FBR Tank	Fluidized Bed Reactor
2	P-5	F-300	1	Strainer	Fluidized Bed Reactor Upstream Strainer
3	P-5	P-301	1	Pump	FBR Fluidization Pump
4	P-5	P-302	1	Pump	FBR Fluidization Pump
5	P-5	PT-301	1	Pressure Transmitter	Pressure transmitter for FBR Fluidization Pump, P-301
6	P-5	PI-301	1	Pressure Indicator	Pressure indicator for FBR Fluidization Pump, P-301
7	P-5	FIT-301	1	Flow Indicating Transmitter	Flow meter for FBR Fluidization Pump, P-301
8	P-5	AIT-300	1	pH Probe	pH meter for the Fluidized Bed Reactor
9	P-5	AIT-301	1	ORP Probe	ORP meter for the Fluidized Bed Reactor
10	P-5	FV-308	1	Flow Control Valve	Flow control valve for FBR Fluidization Pump, P-301
11	P-5	T-303	1	Tank	Acetic Acid Tank
12	P-5	P-303	1	Pump	Acetic Acid Metering Pump
13	P-5	T-304	1	Tank	Urea Solution Tank
14	P-5	P-304	1	Pump	Urea Solution Meterting Pump
15	P-5	T-305	1	Tank	Phosphoric Acid Tank
16	P-5	P-305	1	Pump	Phosphoric Acid Metering Pump
17	P-5	T-306	1	Tank	pH Control Tank
18	P-5	P-306	1	Pump	pH Control Metering Pump

Notes:
1. Packaged FBR System including reagent tanks and dosing systems will be detailed upon issuance of purchase order.

Table 3. Bill of Materials, CONTRACTOR-Provided Instrumentation

Contractor is responsible for verification of all quantities required to complete the work shown on the Engineering Drawings and in the specifications.

ITEM	SHEET	TAG	QTY	EQUIPMENT	DESCRIPTION	SIZE	MODEL / PART NO.	Manufacturer	NOTES
1	P-2	PT-10X	4	Pressure Transmitter	Extraction Well Level Transmitter	-	99240, 0052000-05-01-04	In-situ	LevelTROLL 400, non-vented, 0-300 psi
2	P-2	PI-10X	4	Pressure Indicator	Extraction Well Pressure Indicator	1/4"	351009SWL02L100#	Ashcroft	0-100 psi
3	P-2	LS-11X	4	Leak Detection Level Switch	Extraction Well Vault Leak Detection	-	LS-1755	Gems Sensors & Controls	
4	P-3	FIT-11X	4	Flow Indicating Transmitter	Extraction Manifold Flow Meter	1"	8750WDMT1A1FPSA010CA1M5G1	Rosemount	
5	P-3	PT-11X	4	Pressure Transmitter	Extraction Manifold Pressure Transmitter	1/4"	T27M0242F360#G	Ashcroft	0-60 psi
6	P-3	PI-11X	4	Pressure Indicator	Extraction Manifold Pressure Indicator	1/4"	351009SWL02L60#	Ashcroft	0-60 psi
7	P-3	FV-11X	4	Flow Control Valve	Extraction Manifold Flow Control Valve	2"	Valve: 230200-1101Z386 Actuator: 930835-11300532 Sleeve Adapter: 9000A1-22600536	Bray Controls	
12	P-3	FIT-71X	6	Flow Meter	Injection Manifold Flow Meter	1"	8750WDMT1A1FPSA010CA1M5G1	Rosemount	
13	P-3	PT-71X	6	Pressure Transmitter	Injection Manifold Pressure Transmitter	1/4"	T27M0242F360#G	Ashcroft	0-60 psi
14	P-3	PI-71X	6	Pressure Indicator	Injection Manifold Pressure Indicator	1/4"	351009SWL02L60#	Ashcroft	0-60 psi
15	P-3	FV-71X	6	Flow Control Valve	Injection Manifold Flow Control Valve	2"	Valve: 230200-1101Z386 Actuator: 930835-11300532 Sleeve Adapter: 9000A1-22600536	Bray Controls	
16	P-4	LSLL-201	1	Level Switch Low Low	T-200 Level Switch	-	KA-1C	APG	
17	P-4	LSHH-201	1	Level Switch High High	T-200 Level Switch	-	KA-1C	APG	
18	P-4	PT-200	1	Pressure Transmitter	T-200 Level Transmitter	-	99240, 0052000-05-01-04	In-situ	LevelTROLL 400, non-vented, 0-30 psi
19	P-4	LSLL-211	1	Level Switch Low Low	T-210 Level Switch	-	KA-1C	APG	
20	P-4	LSHH-211	1	Level Switch High High	T-210 Level Switch	-	KA-1C	APG	
21	P-4	PT-210	1	Pressure Transmitter	T-210 Level Transmitter	-	99240, 0052000-05-01-04	In-situ	LevelTROLL 400, non-vented, 0-30 psi
22	P-4	FIT-201	1	Flow Indicating Transmitter	P-201 Flow Meter	2"	8750WDMT1A1FPSA020CA1M5G1	Rosemount	
23	P-4	FIT-211	1	Flow Indicating Transmitter	P-211 Flow Meter	2"	8750WDMT1A1FPSA020CA1M5G1	Rosemount	
24	P-4	FIT-200	1	Flow Indicating Transmitter	T-200 Influent Flow Meter	2"	8750WDMT1A1FPSA020CA1M5G1	Rosemount	
25	P-4	PT-201	1	Pressure Transmitter	P-201 Pressure Transmitter	1/4"	T27M0242F360#G	Ashcroft	0-60 psi
26	P-4	PI-201	1	Pressure Indicator	P-201 Pressure Indicator	1/4"	351009SWL02L60#	Ashcroft	0-60 psi
27	P-4	FV-212	1	Flow Control Valve	T-210 Flow Control Valve	2"	Valve: 230200-1101Z386 Actuator: 930835-11300532 Sleeve Adapter: 9000A1-22600536	Bray Controls	
28	P-4	PT-211	1	Pressure Transmitter	P-211 Pressure Transmitter	1/4"	T27M0242F330#G	Ashcroft	0-30 psi
29	P-4	PI-211	1	Pressure Indicator	P-211 Pressure Indicator	1/4"	351009SWL02L30#	Ashcroft	0-30 psi
30	P-4	HS-001	1	E-Stop Local	Building Containment E-Stop	-	32W274	Dayton	
31	P-4	LS-001	1	Leak Detection Level Switch	Building Containment Leak Detection	-	LS-1755	Gems Sensors & Controls	
32	P-5	HS-002	1	E-Stop Local	FBR Containment Pad E-Stop	-	32W274	Dayton	
33	P-5	LS-002	1	Leak Detection Level Switch	FBR Containment Leak Detection	-	LS-1755	Gems Sensors & Controls	
34	P-5	FV-307	1	Flow Control Valve	T-200 Effluent Flow Control Valve	2"	Valve: 230200-1101Z386 Actuator: 930835-11300532 Sleeve Adapter: 9000A1-22600536	Bray Controls	
35	P-6	LSLL-401	1	Level Switch Low Low	T-400 Level Switch	-	KA-1C	APG	KA-1C unit functions as low and high alarm
36	P-6	LSHH-401	1	Level Switch High High	T-400 Level Switch	-	KA-1C	APG	KA-1C unit functions as low and high alarm
37	P-6	PT-400	1	Pressure Transmitter	T-400 Level Transmitter	-	99240, 0052000-05-01-04	In-situ	LevelTROLL 400, non-vented, 0-30 psi
38	P-6	FIT-401	1	Flow Indicating Transmitter	P-401 Flow Meter	2"	8750WDMT1A1FPSA020CA1M5G1	Rosemount	
39	P-6	PT-401	1	Pressure Transmitter	P-401 Pressure Transmitter	1/4"	T27M0242F3100#G	Ashcroft	0-100 psi
40	P-6	PI-401	1	Pressure Indicator	P-401 Pressure Indicator	1/4"	351009SWL02L100#	Ashcroft	0-100 psi
41	P-6	PT-501	1	Pressure Transmitter	T-501 Influent Pressure Transmitter	1/4"	T27M0242F3100#G	Ashcroft	0-100 psi
42	P-6	PI-501	1	Pressure Indicator	T-501 Influent Pressure Indicator	1/4"	351009SWL02L100#	Ashcroft	0-100 psi
43	P-6	PT-502	1	Pressure Transmitter	T-501 Effluent Pressure Transmitter	1/4"	T27M0242F3100#G	Ashcroft	0-100 psi
44	P-6	PI-502	1	Pressure Indicator	T-501 Effluent Pressure Indicator	1/4"	351009SWL02L100#	Ashcroft	0-100 psi
45	P-6	FV-501	1	Flow Control Valve	T-501 Influent Flow Control Valve	3"	Valve: 230300-1101Z386 Actuator: 930835-11300532 Sleeve Adapter: 9000A2-22600536	Bray Controls	
46	P-6	FV-502	1	Flow Control Valve	T-501 Effluent Flow Control Valve	3"	Valve: 230300-1101Z386 Actuator: 930835-11300532 Sleeve Adapter: 9000A2-22600536	Bray Controls	
47	P-6	FV-503	1	Flow Control Valve	T-501 Clean Backwash Flow Control Valve	3"	Valve: 230300-1101Z386 Actuator: 930835-11300532 Sleeve Adapter: 9000A2-22600536	Bray Controls	
48	P-6	FV-504	1	Flow Control Valve	T-501 Dirty Backwash Flow Control Valve	3"	Valve: 230300-1101Z386 Actuator: 930835-11300532 Sleeve Adapter: 9000A2-22600536	Bray Controls	
49	P-3	PI-901	1	Pressure Indicator	A-900 Compressed Air Pressure Indicator	1/4"	351009SWL02L160#	Ashcroft	0-160 psi
50	P-3	PT-901	1	Pressure Transmitter	A-900 Compressed Air Pressure Transmitter	1/4"	T27M0242F3150#G	Ashcroft	0-150 psi
51	P-7	PT-601	1	Pressure Transmitter	T-601 Influent Pressure Transmitter	1/4"	T27M0242F3100#G	Ashcroft	0-100 psi
52	P-7	PT-602	1	Pressure Transmitter	T-601 Effluent Pressure Transmitter	1/4"	T27M0242F3100#G	Ashcroft	0-100 psi
53	P-7	PT-603	1	Pressure Transmitter	T-602 Influent Pressure Transmitter	1/4"	T27M0242F3100#G	Ashcroft	0-100 psi
54	P-7	PT-604	1	Pressure Transmitter	T-602 Effluent Pressure Transmitter	1/4"	T27M0242F3100#G	Ashcroft	0-100 psi
55	P-7	PT-605	1	Pressure Transmitter	T-603 Influent Pressure Transmitter	1/4"	T27M0242F3100#G	Ashcroft	0-100 psi
56	P-7	PT-606	1	Pressure Transmitter	T-603 Effluent Pressure Transmitter	1/4"	T27M0242F3100#G	Ashcroft	0-100 psi
57	P-7	PT-607	1	Pressure Transmitter	T-604 Influent Pressure Transmitter	1/4"	T27M0242F3100#G	Ashcroft	0-100 psi
58	P-7	PT-608	1	Pressure Transmitter	T-604 Effluent Pressure Transmitter	1/4"	T27M0242F3100#G	Ashcroft	0-100 psi
59	P-8	PT-801	1	Pressure Transmitter	T-801 Influent Pressure Transmitter	1/4"	T27M0242F360#G	Ashcroft	0-60 psi
60	P-8	PT-802	1	Pressure Transmitter	T-801 Effluent Pressure Transmitter	1/4"	T27M0242F360#G	Ashcroft	0-60 psi
61	P-8	PT-803	1	Pressure Transmitter	T-802 Influent Pressure Transmitter	1/4"	T27M0242F360#G	Ashcroft	0-60 psi
62	P-8	PT-804	1	Pressure Transmitter	T-802 Effluent Pressure Transmitter	1/4"	T27M0242F360#G	Ashcroft	0-60 psi
63	P-8	PT-805	1	Pressure Transmitter	T-803 Influent Pressure Transmitter	1/4"	T27M0242F360#G	Ashcroft	0-60 psi
64	P-8	PT-806	1	Pressure Transmitter	T-803 Effluent Pressure Transmitter	1/4"	T27M0242F360#G	Ashcroft	0-60 psi
65	P-8	PT-807	1	Pressure Transmitter	F-801/802 Influent Pressure Transmitter	1/4"	T27M0242F360#G	Ashcroft	0-60 psi
66	P-8	PT-808	1	Pressure Transmitter	F-801/802 Effluent Pressure Transmitter	1/4"	T27M0242F360#G	Ashcroft	0-60 psi
67	P-8	PI-807	1	Pressure Indicator	F-801/802 Influent Pressure Indicator	1/4"	351009SWL02L60#	Ashcroft	0-60 psi
68	P-8	PI-808	1	Pressure Indicator	F-801/802 Effluent Pressure Indicator	1/4"	351009SWL02L60#	Ashcroft	0-60 psi
69	P-9	LSLL-701	1	Level Switch Low Low	T-700 Level Switch	-	KA-1C	APG	KA-1C unit functions as low and high alarm
70	P-9	LSHH-701	1	Level Switch High High	T-700 Level Switch	-	KA-1C	APG	KA-1C unit functions as low and high alarm
71	P-9	PT-700	1	Pressure Transmitter	T-700 Level Transmitter	-	99240, 0052000-05-01-04	In-situ	LevelTROLL 400, non-vented, 0-30 psi
72	P-9	FV-702	1	Flow Control Valve	T-700 Effluent Flow Control Valve	3"	Valve: 230300-1101Z386 Actuator: 930835-11300532 Sleeve Adapter: 9000A2-22600536	Bray Controls	
73	P-9	FIT-501	1	Flow Meter	P-501 Flow Meter	2"	8750WDMT1A1FPSA020CA1M5G1	Rosemount	
74	P-9	FIT-701	1	Flow Meter	P-701 Flow Meter	2"	8750WDMT1A1FPSA020CA1M5G1	Rosemount	
75	P-9	PT-511	1	Pressure Transmitter	P-501 Pressure Transmitter	1/4"	T27M0242F3100#G	Ashcroft	0-100 psi
76	P-9	PI-511	1	Pressure Indicator	P-501 Pressure Indicator	1/4"	351009SWL02L100#	Ashcroft	0-100 psi
77	P-9	PT-701	1	Pressure Transmitter	P-701 Pressure Transmitter	1/4"	T27M0242F3200#G	Ashcroft	0-200 psi
78	P-9	PI-701	1	Pressure Indicator	P-701 Pressure Indicator	1/4"	351009SWL02L160#	Ashcroft	0-160 psi
79	P-10	PT-72X	6	Pressure Transmitter	Injection Well Level Transmitter	-	99240, 0052000-05-01-04	In-situ	LevelTROLL 400, non-vented, 0-300 psi

80	P-10	PI-72X	6	Pressure Indicator	Injection Well Pressure Indicator	1/4"	351009SWL02L60#	Ashcroft	0-60 psi
81	P-10	LS-73X	6	Leak Detection Level Switch	Injection Well Vault Leak Detection	-	LS-1755	Gems Sensors & Controls	
82	P-1 to P-11	PS-XXX	29	Pressure Snubber	Pressure Dampening	1/4"	25-1112S-E	Ashcroft	1/4" 303 SS, water application
83	P-4	LS-003	1	Multipoint Level Switch	Treatment Building Sump Level Switch	-	LS-800PVC	Gems Sensors & Controls	Multipoint level switch for LSL, LSH, LSHH
84	P-5	LS-004	1	Multipoint Level Switch	FBR Containment Sump Level Switch	-	LS-800PVC	Gems Sensors & Controls	Multipoint level switch for LSL, LSH, LSHH
85	-	-	32	Pneumatic Valve Exhaust Flow Control	Pneumatic Valve Open/Close Speed Control	-	1EJU3	Speedaire	1/4" NPT Pneumatic Valve Open/Close Speed Control (2 per Bray Valve)

APPENDIX F

Equipment Cut Sheets

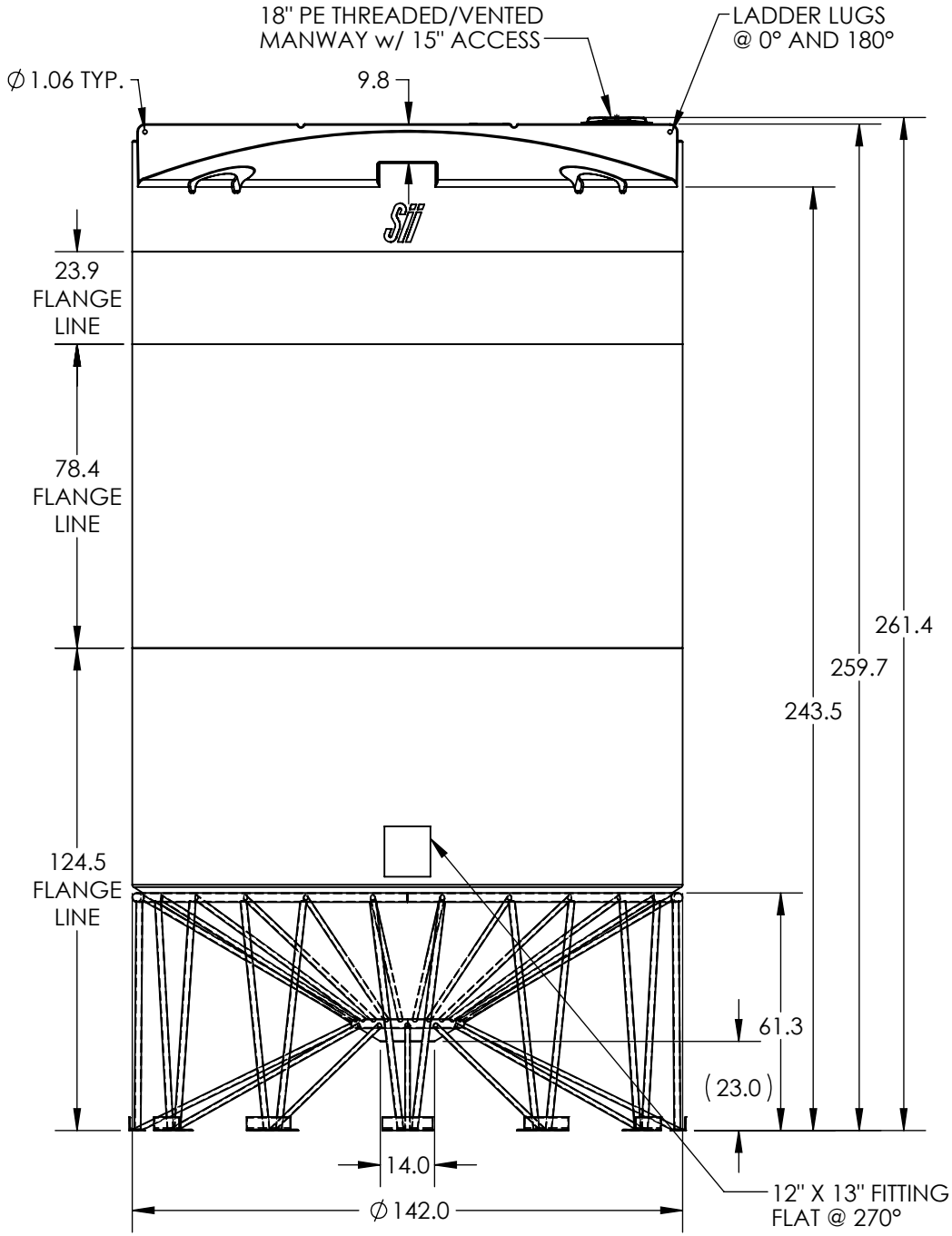

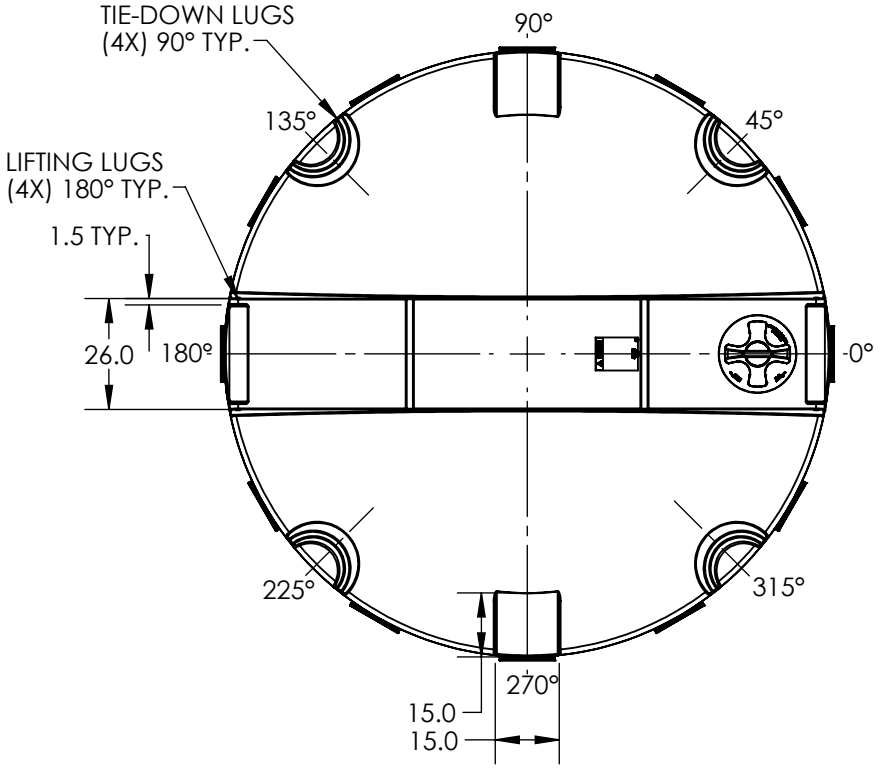

***ALL EXTERNAL PIPING MUST BE INDEPENDENTLY SUPPORTED.**
***ONLY BASE FITTINGS TO BE LEFT INSTALLED AT TIME OF SHIPMENT PER SII PROCEDURE.**
***Consult Snyder's Guidelines for Use and Installation prior to delivery.**
Available on-line at www.snyderindustriestanks.com/Technical

ALL DIMENSIONS ARE IN INCHES, NOMINAL, & SUBJECT TO CHANGE WITHOUT NOTICE.
ALL DIMENSIONS ON ROTATIONAL MOLDED PARTS ARE SUBJECT TO A ± 3% TOLERANCE.

DO NOT SCALE	DRAWN BY	DATE
STATUS: **Released**	KB	07/14/2014

© SNYDER INDUSTRIES INC., 2014

ALL DIMENSIONS, DESIGNS, AND INFORMATION ON THIS PRINT MUST BE CONSIDERED PROPRIETARY TO SNYDER INDUSTRIES, INC. AND MAY NOT BE USED, COPIED, OR DISTRIBUTED WITHOUT WRITTEN PERMISSION OF AN OFFICER (OR HIS AGENT) OF THE FIRM.

SNYDER INDUSTRIES, INC.
4700 Fremont Street
Lincoln, NE 68504
(402) 467-5221
www.snydernet.com

TITLE: **13000 GALLON 30° CONE BOTTOM TANK W/STAND**

REVISION: **A**

SHEET: 1 OF 1

PART NO. **7490100N & 79500000**

ENG. ID. **A002761**

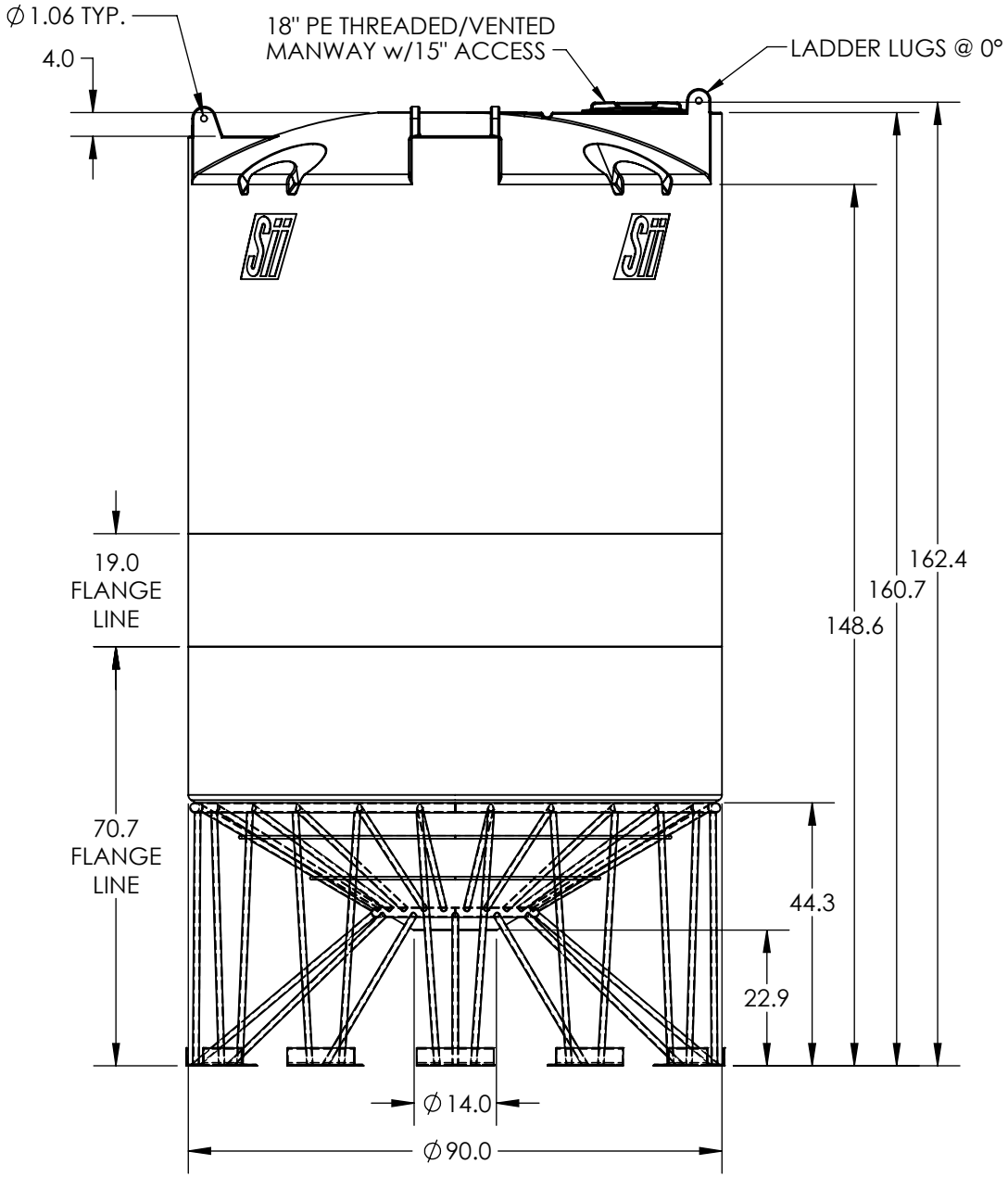

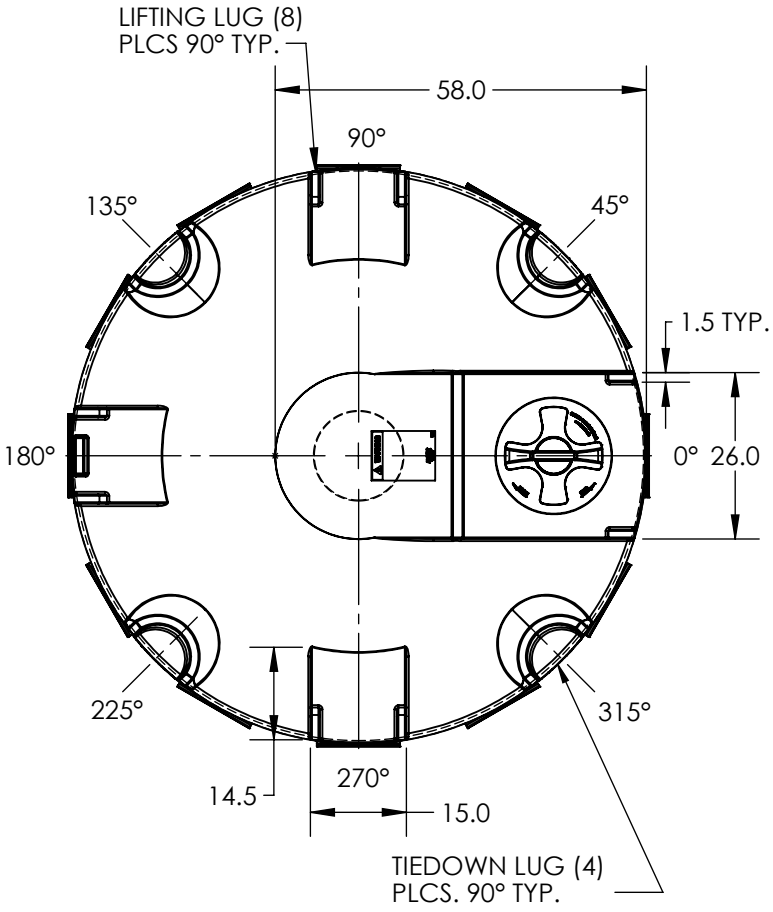

***ALL EXTERNAL PIPING MUST BE INDEPENDENTLY SUPPORTED.**
***ONLY BASE FITTINGS TO BE LEFT INSTALLED AT TIME OF SHIPMENT PER SII PROCEDURE.**
***Consult Snyder's Guidelines for Use and Installation prior to delivery.**
Available on-line at http://www.snyderindustriestanks.com/Technical

ALL DIMENSIONS ARE IN INCHES, NOMINAL, & SUBJECT TO CHANGE WITHOUT NOTICE.
ALL DIMENSIONS ON ROTATIONAL MOLDED PARTS ARE SUBJECT TO A ± 3% TOLERANCE.

DO NOT SCALE	DRAWN BY
STATUS: **Released**	KB

© SNYDER INDUSTRIES INC., 2015

ALL DIMENSIONS, DESIGNS, AND INFORMATION ON THIS PRINT MUST BE CONSIDERED PROPRIETARY TO SNYDER INDUSTRIES, INC. AND MAY NOT BE USED, COPIED, OR DISTRIBUTED WITHOUT WRITTEN PERMISSION OF AN OFFICER (OR HIS AGENT) OF THE FIRM.

SNYDER INDUSTRIES, INC.
(402) 467-5221
www.snydernet.com

TITLE: **3000 GALLON 30° CONE BOTTOM TANK W/STAND**

REVISION: **A**

SHEET: 1 OF 1

PART NO. **5150000N & 79300000**

ENG. ID. **A001743**

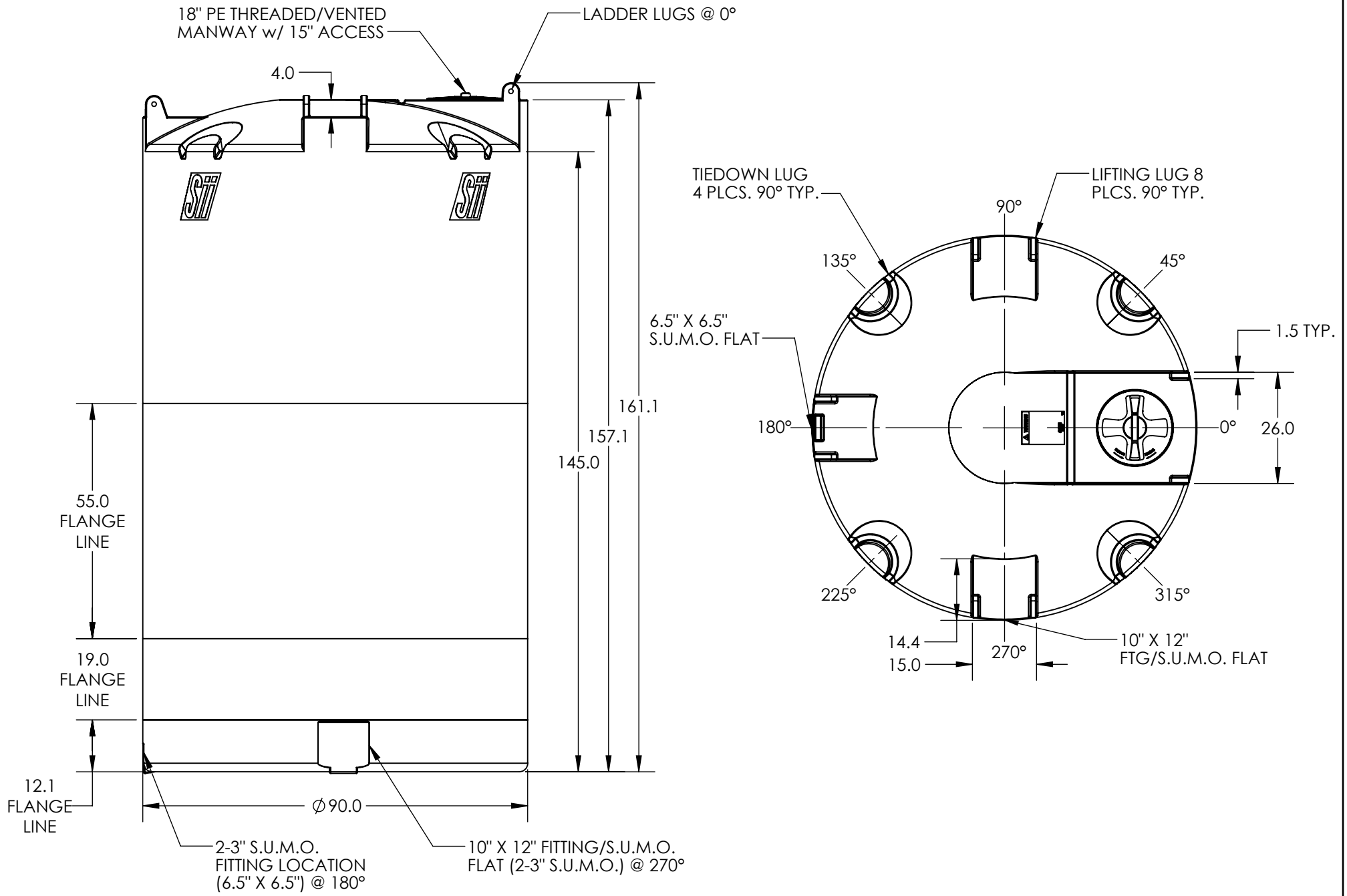

***ALL EXTERNAL PIPING MUST BE INDEPENDENTLY SUPPORTED.**
***ONLY BASE FITTINGS TO BE LEFT INSTALLED AT TIME OF SHIPMENT PER SII PROCEDURE.**
***Consult Snyder's Guidelines for Use and Installation prior to delivery.**
Available on-line at www.snydernet.com/industrial_tanks_snyder.htm

ALL DIMENSIONS ARE IN INCHES, NOMINAL, & SUBJECT TO CHANGE WITHOUT NOTICE.
ALL DIMENSIONS ON ROTATIONAL MOLDED PARTS ARE SUBJECT TO A ± 3% TOLERANCE.

DO NOT SCALE	DRAWN BY	DATE
STATUS: **Released**	ET3	07/31/2013

© SNYDER INDUSTRIES INC., 2013

ALL DIMENSIONS, DESIGNS, AND INFORMATION ON THIS PRINT MUST BE CONSIDERED PROPRIETARY TO SNYDER INDUSTRIES, INC. AND MAY NOT BE USED, COPIED, OR DISTRIBUTED WITHOUT WRITTEN PERMISSION OF AN OFFICER (OR HIS AGENT) OF THE FIRM.

SNYDER INDUSTRIES, INC.
4700 Fremont Street
Lincoln, NE 68516
(402) 467-5221
www.snydernet.com

TITLE: **ASM TK 3900VDT X 90**

REVISION: **A**

SHEET: 1 OF 1

PART NO.: **5190000N___01**

ENG. ID.: **D001157**

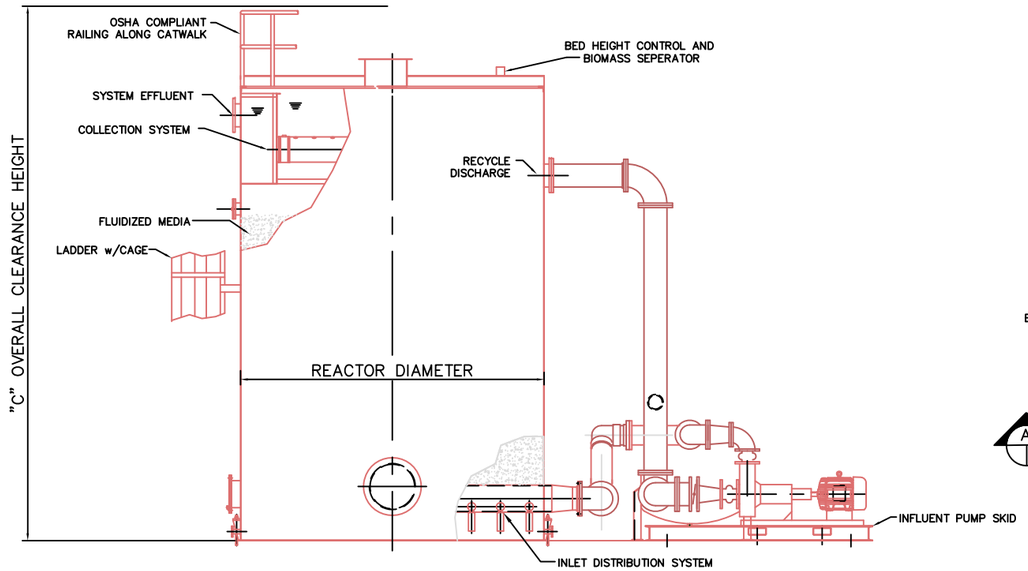

VIEW A

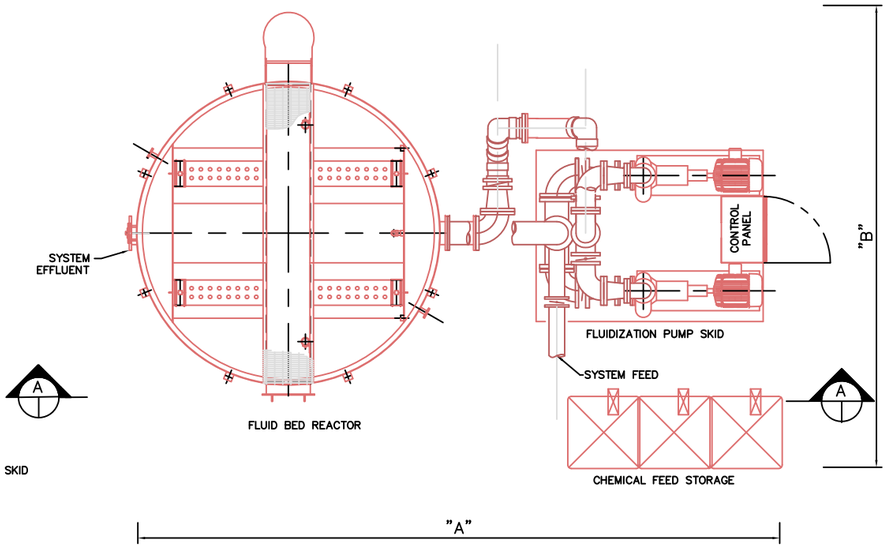

EQUIPMENT LAYOUT – PLAN VIEW

MODEL	2	5	7.5	9	11.5	14
Floor Plan and Height Dimensions "A" X "B" X "C"	12' X 12' X 17'-0"	12' X 14' X 17'-3"	13' X 21' X 19'-3"	13' X 23' X 19'-3"	25' X 21' X 19'-6"	30' X 21' X 21'-9"
Fluid Bed Reactor						
Diameter (ft)	2'-0"	5'-0"	7'-6"	9'-0"	11'-6"	14'-0"
Volume (gal.)	350	2,200	5,000	7,200	15,600	23,000
Empty Weight (lbs)	2,100	5,300	7,750	8,900	14,700	20,000
Operating Weight (lbs)	6,500	33,000	69,500	97,500	205,500	305,000
Foundation Load (lb/ft^2)	2,000	1,700	1,600	1,550	2,000	2,000
Fluidization Pumps (One Spare)						
Flow (gpm)	40	250	550	800	1,300	2,000
Horse Power (hp)	2	7.5	15	25	30	40
Oxygenation Vessel						
Diameter (lower) (in)	8	18	26	30	42	54
Empty Weight (lbs)						2,750
Operating Weight (lbs)						6,430
Chemical Storage Tank						
Volume (gal.)	55	55	55	55	250	250
Service Requirements						
Electric						
120V/60Hz/1ph (amps)	20	20	20	20	20	20
460V/60Hz/3ph (amps)	15	15	30	40	50	60
Service Water (gpm @ 60 psi) *	-	0-10	0-10	0-10	0-20	0-20
Instrument Air (SCFM @ 90 psi)		1	1	2	2	3
Compressed Air (SCFM @ 90 psi)				SEE NOTE 4.		

* SERVICE WATER USAGE IS INTERMITTENT. AVERAGE USAGE WILL BE 0–10% OF LISTED MAXIMUM VALUE.

GENERAL NOTE:

1. EQUIPMENT DEPICTED IS A 14 FOOT DIAMETER SYSTEM. THE ARRANGEMENT OF OTHER SIZES IS SIMILAR. HEIGHTS OF THE REACTOR ("C") CAN VARY DEPENDING ON APPLICATION.

2. SOME EQUIPMENT SHOWN IS OPTIONAL, SUCH AS SUPPLY OF SECOND FLUIDIZATION PUMP, AND SKID MOUNTING OF FLUIDIZATION PUMPS, CONTROL PANEL AND INTERCONNECTING PIPING.

3. MAXIMUM FLOOR PLAN DIMENSIONS LISTED INCLUDE OPTIONAL EQUIPMENT.

4. COMPRESSED AIR REQUIREMENTS VARY DEPENDING ON OPTIONAL EQUIPMENT INSTALLED.

REV	DATE	DESCRIPTION OF REVISION	REVISED BY	CHECKED BY
△				
△				
△				
△				
△				

THIS IS A COMPUTER GENERATED DRAWING AND ONLY EDITS CONSISTENT WITH ENVIROGEN'S ORIGINAL CAD FORMAT SHALL BE CONSIDERED VALID COPIES.

DRAWING SCALE: 3/8" = 1' 0"
DESIGNED BY/DATE: RL 11/29/99
DRAWN BY/DATE: DM 11/29/99
CHECKED BY/DATE: MD 11/29/99
SHEET SIZE: D
REVISION: A
SHEET 1 OF 1
DRAWING #: M-1
FILE #: ETI ANOXIC_FBR_LAYOUT

ENVIROGEN TECHNOLOGY
SALES DRAWING

GENERAL ARRANGEMENT
ANOXIC FLUID BED REACTOR SYSTEMS

U.S. PATENTS 5750028, 5788842, 6706521 AND PATENTS PENDING.

THIS DRAWING IS A VISUAL REPRESENTATION OF THE EQUIPMENT AND/OR SYSTEM PROPOSED. IT IS NOT INTENDED FOR CONSTRUCTION PURPOSES.

ENVIROGEN TECHNOLOGIES
250 PHILLIPS BLVD. SUITE 255
EWING, NJ 08618
A Lifecycle Performance Company
A member of The Amplio Group

ALL INFORMATION CONTAINED ON THIS DOCUMENT IS THE PROPERTY OF ENVIROGEN TECHNOLOGIES, INC. ("ENVIROGEN") AND/OR ITS AFFILIATES. THE DESIGN CONCEPTS AND INFORMATION CONTAINED HEREIN ARE PROPERTY OF ENVIROGEN AND ARE SUBMITTED IN CONFIDENCE. THEY ARE NOT TRANSFERABLE AND MUST BE USED ONLY FOR THE USE AND PROJECT FOR WHICH THE DOCUMENT IS EXPRESSLY SUBMITTED. THEY MUST NOT BE DISCLOSED, REPRODUCED, LOANED OR USED IN ANY OTHER MANNER WITHOUT THE EXPRESS WRITTEN CONSENT OF ENVIROGEN. ENVIROGEN ASSUMES NO RESPONSIBILITY OR LIABILITY FOR THE USE OF THIS DOCUMENT OR THE DESIGN CONCEPTS AND INFORMATION CONTAINED HEREIN FOR ANOTHER PROJECT, OR IN A MANNER THAT DOES NOT RELATE TO THE ORIGINALLY INTENDED USE OF THIS DOCUMENT. IN NO EVENT SHALL THIS DOCUMENT OR THE DESIGN CONCEPTS AND INFORMATION CONTAINED HEREIN BE USED IN ANY MANNER DETRIMENTAL TO THE INTEREST OF ENVIROGEN. THE RIGHTS AND OBLIGATIONS OF ENVIROGEN AND ITS CUSTOMER ARE FURTHER LIMITED IN THE AGREEMENT BETWEEN THEM FOR THIS PROJECT. ALL PATENT AND OTHER RIGHTS ARE RESERVED. ACCEPTANCE OF THE DELIVERY OF THIS DOCUMENT CONSTITUTES AGREEMENT TO THESE TERMS AND CONDITIONS.

Company name:
Created by:
Phone:

Date: 9/28/2017

Position	Count	Description
	1	**MS 4000**

Product photo could vary from the actual product

Product No.: 79354507
The motor is a 3-phase motor of the canned type with a sand shield, liquid-lubricated bearings and pressure-equalizing diaphragm.

Technical:

Shaft seal for motor:	HM/CER
Approvals on nameplate:	CE,GOST2,CSA

Materials:

Motor:	Stainless steel DIN W.-Nr. 1.4301 AISI 304

Installation:

Maximum ambient pressure:	870 psi
Motor diameter:	4 inch

Electrical data:

Motor type:	MS4000
Rated power - P2:	3 HP
Main frequency:	60 Hz
Rated voltage:	3 x 440-460 V
Voltage tolerance:	+6/-10 %
Service factor:	1,15
Rated current:	5,65-5,80 A
Starting current:	510-520 %
Cos phi - power factor:	0,82-0,78
Rated speed:	3440-3460 rpm
Locked-rotor torque:	170-190 %
Moment of inertia:	0.033 lb ft²
Start. method:	direct-on-line
Enclosure class (IEC 34-5):	IP58
Insulation class (IEC 85):	F
Built-in temperature transmitter:	No
Winding resistance:	8,20 ohm

Others:

Net weight:	35.3 lb

Company name:
Created by:
Phone:

Date: 9/28/2017

Description	Value
General information:	
Product name:	MS 4000
Product No.:	79354507
EAN:	5700390658465
Technical:	
Shaft seal for motor:	HM/CER
Approvals on nameplate:	CE,GOST2,CSA
Materials:	
Motor:	Stainless steel
	DIN W.-Nr. 1.4301
	AISI 304
Installation:	
Maximum ambient pressure:	870 psi
Motor diameter:	4 inch
Staybolt:	5/16" UNF
Electrical data:	
Motor type:	MS4000
Rated power - P2:	3 HP
Main frequency:	60 Hz
Rated voltage:	3 x 440-460 V
Voltage tolerance:	+6/-10 %
Service factor:	1,15
Rated current:	5,65-5,80 A
Starting current:	510-520 %
Cos phi - power factor:	0,82-0,78
Rated speed:	3440-3460 rpm
Locked-rotor torque:	170-190 %
Moment of inertia:	0.033 lb ft²
Axial load max:	992 lb
Start. method:	direct-on-line
Enclosure class (IEC 34-5):	IP58
Insulation class (IEC 85):	F
Motor protection:	NONE
Thermal protec:	external
Built-in temperature transmitter:	No
Winding resistance	8,20 ohm
Others:	
Net weight:	35.3 lb

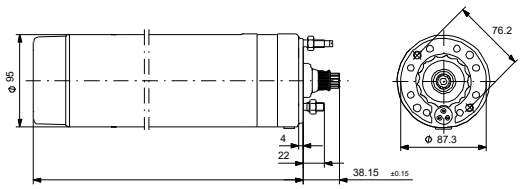

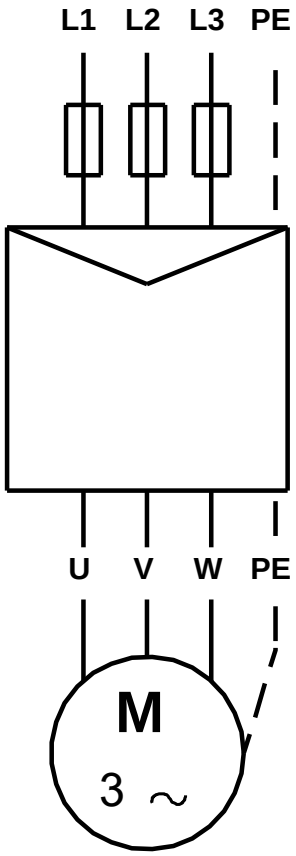

Company name:
Created by:
Phone:

Date: 9/28/2017

79354507 MS 4000 60 Hz

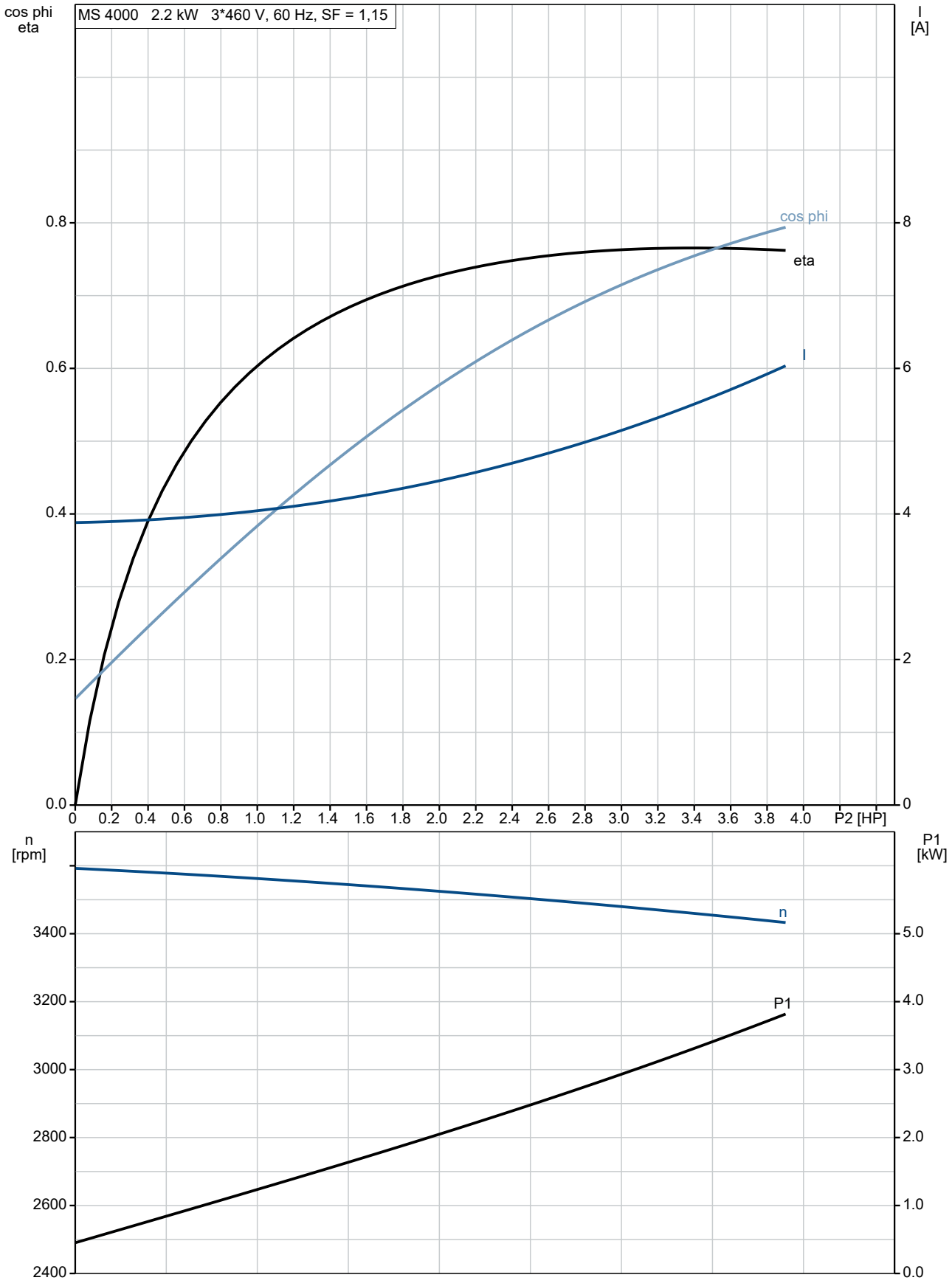

Company name:
Created by:
Phone:

Date: 9/28/2017

79354507 MS 4000 60 Hz

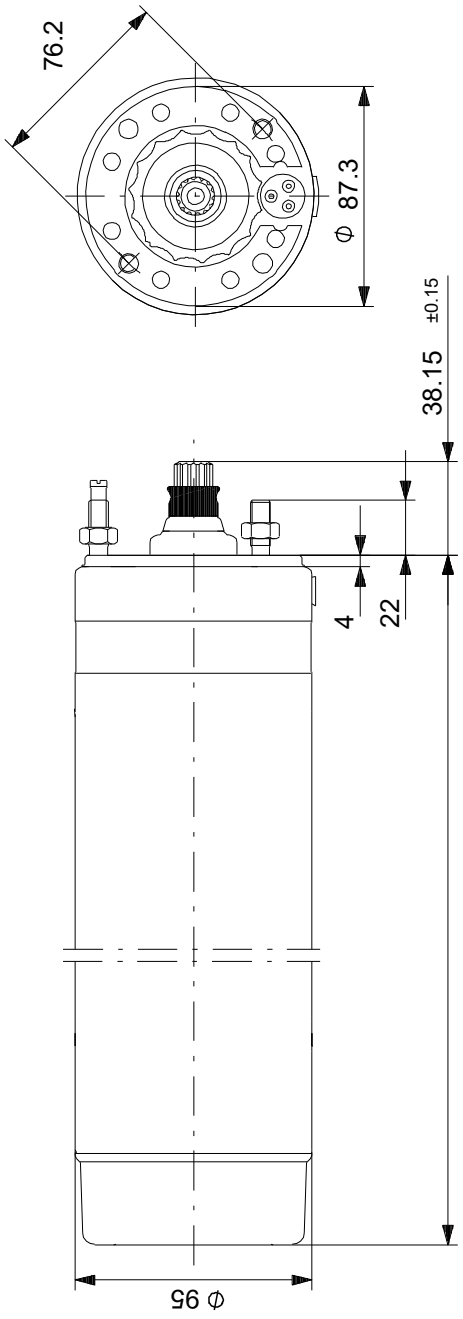

Note! All units are in [mm] unless otherwise stated.
Disclaimer: This simplified dimensional drawing does not show all details.

GRUNDFOS

Company name:
Created by:
Phone:

Date: 9/28/2017

79354507 MS 4000 60 Hz

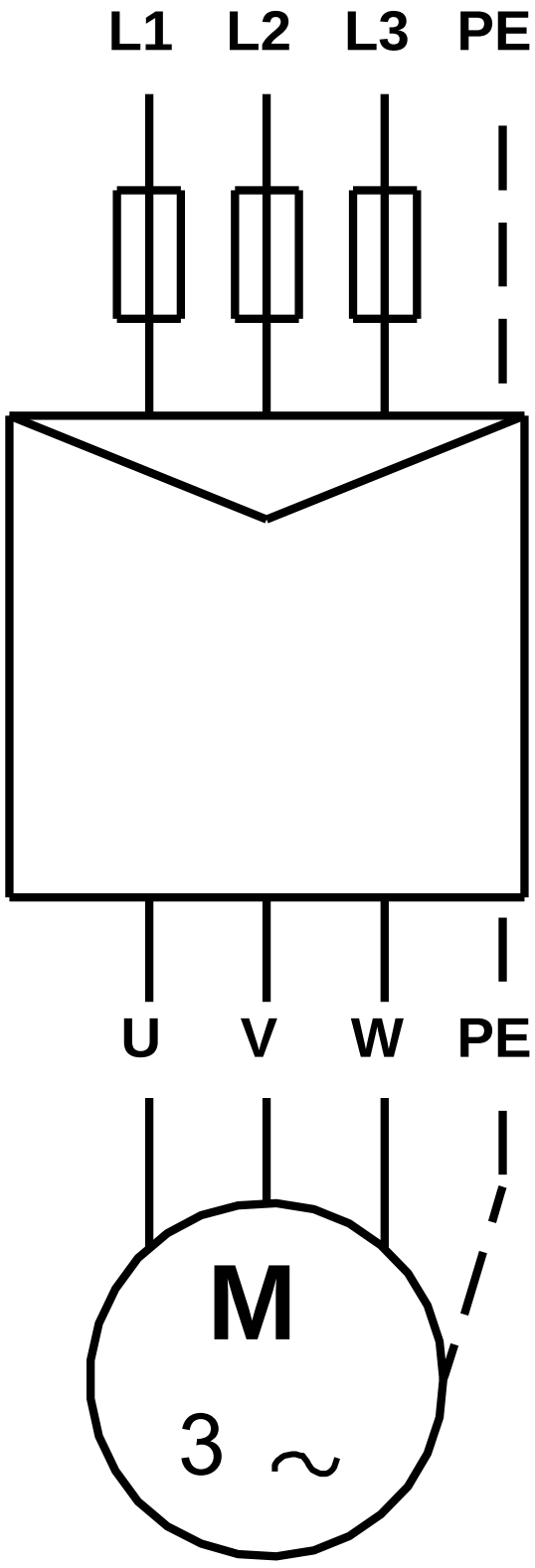

All units are [mm] unless otherwise presented.

Company name:
Created by:
Phone:

Date: 9/28/2017

Position	Count	Description
	1	**25S30-15**

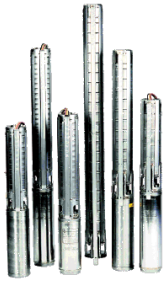

Product photo could vary from the actual product

Product No.: 51536155
Multi-stage submersible pump for raw water supply, groundwater lowering and pressure boosting. The pump is suitable for pumping clean, thin, non-agressive liquids without solid particles or fibers.

The pump is made entirely of Stainless steel DIN W.-Nr. DIN W.-Nr. 1.4301 and suitable for horizontal and vertical installation.
The pump is fitted with a built-in non-return valve.

The motor is a 3-phase motor of the canned type with a sand shield, liquid-lubricated bearings and pressure-equalizing diaphragm.

Liquid:

Pumped liquid:	Water
Maximum liquid temperature:	104 °F
Liquid temperature during operation:	68 °F
Density:	62.29 lb/ft³

Technical:

Speed for pump data:	3450 rpm
Actual calculated flow:	0.1 US gpm
Resulting head of the pump:	454.9 ft
Shaft seal for motor:	HM/CER
Approvals on nameplate:	CE,GOST2,CSA
Curve tolerance:	ISO9906:2012 3B

Materials:

Pump:	Stainless steel DIN W.-Nr. 1.4301 AISI 304
Impeller:	Stainless steel DIN W.-Nr. 1.4301 AISI 304
Motor:	Stainless steel DIN W.-Nr. 1.4301 AISI 304

Installation:

Pump outlet:	1 1/2"NPT
Motor diameter:	4 inch

Electrical data:

Motor type:	MS4000
Rated power - P2:	3 HP

Position	Count	Description	
		Power (P2) required by pump:	3.178 HP
		Main frequency:	60 Hz
		Rated voltage:	3 x 440-460 V
		Service factor:	1,15
		Rated current:	5,65-5,80 A
		Cos phi - power factor:	0,82-0,78
		Rated speed:	3440-3460 rpm
		Start. method:	direct-on-line
		Enclosure class (IEC 34-5):	IP58
		Insulation class (IEC 85):	F
		Built-in temperature transmitter:	No
		Others:	
		Net weight:	53.1 lb
		Gross weight:	59.1 lb

Company name:
Created by:
Phone:

Date: 9/28/2017

51536155 25S30-15 60 Hz

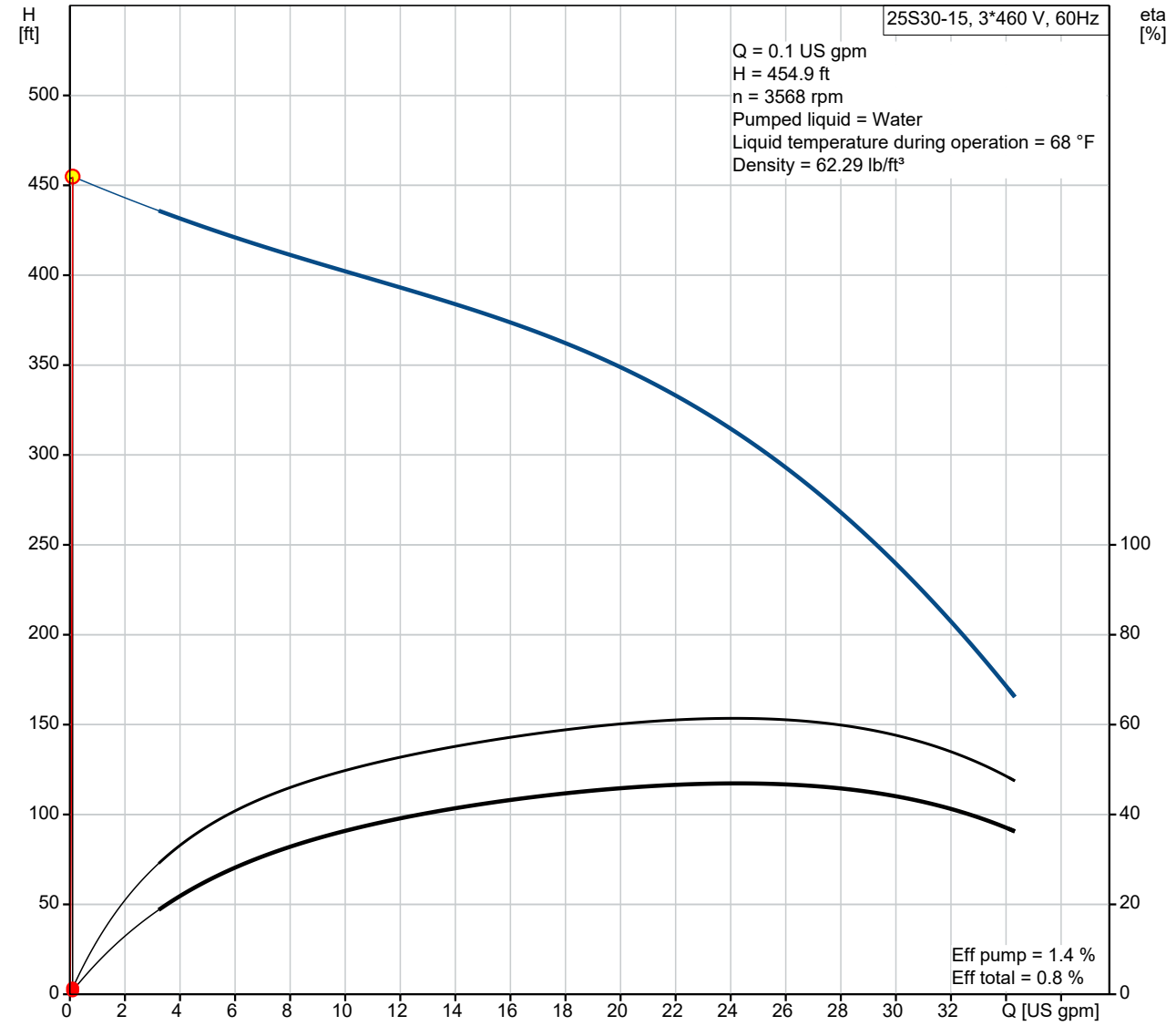

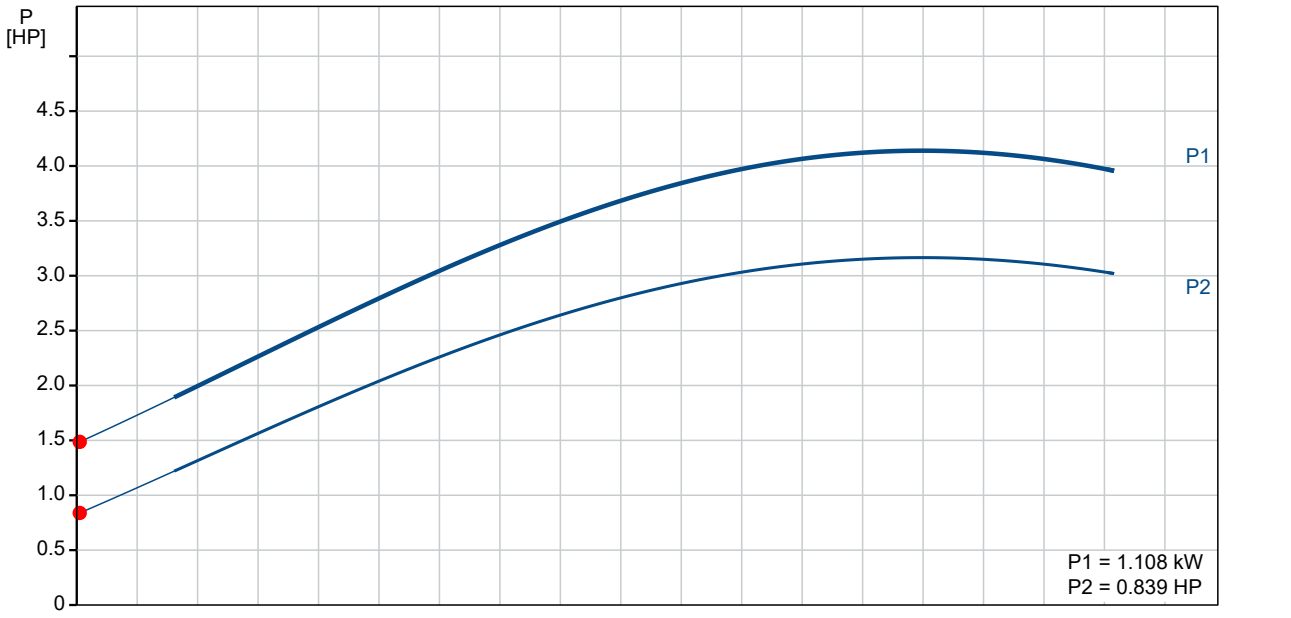

Company name:
Created by:
Phone:

Date: 9/28/2017

Description	Value
General information:	
Product name:	25S30-15
Product No.:	51536155
EAN:	5700394508360
Technical:	
Speed for pump data:	3450 rpm
Actual calculated flow:	0.1 US gpm
Resulting head of the pump:	454.9 ft
Shaft seal for motor:	HM/CER
Approvals on nameplate:	CE,GOST2,CSA
Curve tolerance:	ISO9906:2012 3B
Pump Number:	5010015
Stages:	15
Model:	A
Valve:	pump with built-in non-return valve
Materials:	
Pump:	Stainless steel
	DIN W.-Nr. 1.4301
	AISI 304
Impeller:	Stainless steel
	DIN W.-Nr. 1.4301
	AISI 304
Motor:	Stainless steel
	DIN W.-Nr. 1.4301
	AISI 304
Installation:	
Pump outlet:	1 1/2"NPT
Motor diameter:	4 inch
Liquid:	
Pumped liquid:	Water
Maximum liquid temperature:	104 °F
Liquid temperature during operation:	68 °F
Density:	62.29 lb/ft³
Electrical data:	
Motor type:	MS4000
Applic. motor:	NEMA
Rated power - P2:	3 HP
Power (P2) required by pump:	3.178 HP
Main frequency:	60 Hz
Rated voltage:	3 x 440-460 V
Service factor:	1,15
Rated current:	5,65-5,80 A
Cos phi - power factor:	0,82-0,78
Rated speed:	3440-3460 rpm
Start. method:	direct-on-line
Enclosure class (IEC 34-5):	IP58
Insulation class (IEC 85):	F
Motor protection:	NONE
Thermal protec:	external
Built-in temperature transmitter:	No
Motor Number:	79354507
Others:	

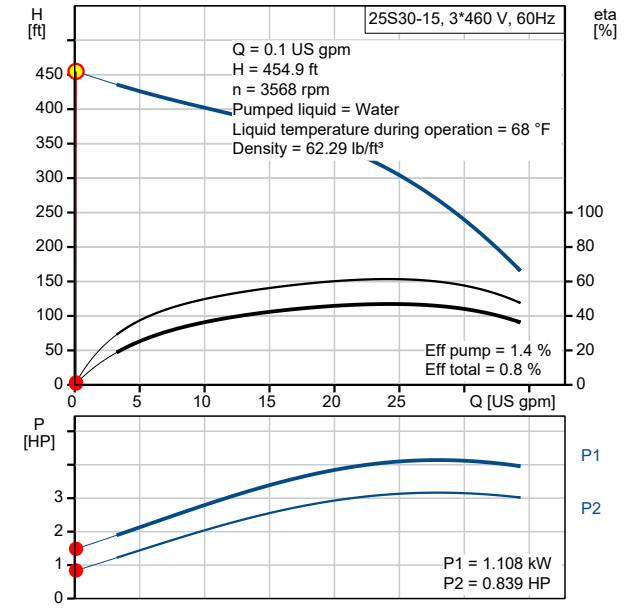

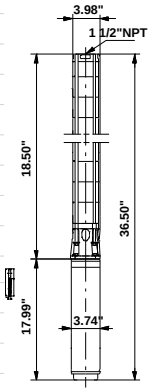

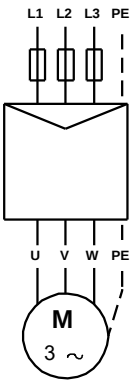

Company name:
Created by:
Phone:

Date: 9/28/2017

Description	Value
Net weight:	53.1 lb
Gross weight:	59.1 lb
Sales region:	Namreg

Company name:
Created by:
Phone:

Date: 9/28/2017

51536155 25S30-15 60 Hz

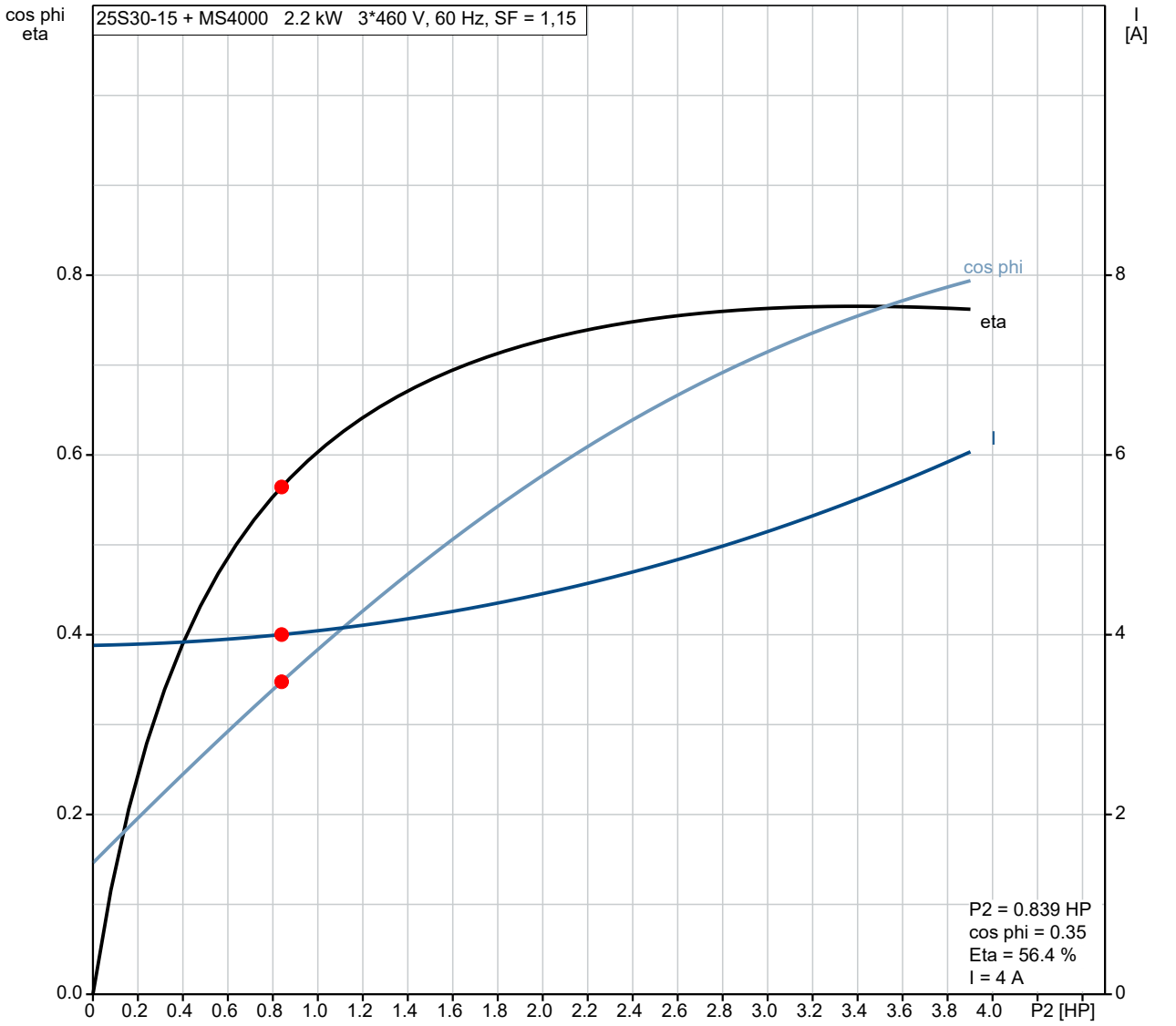

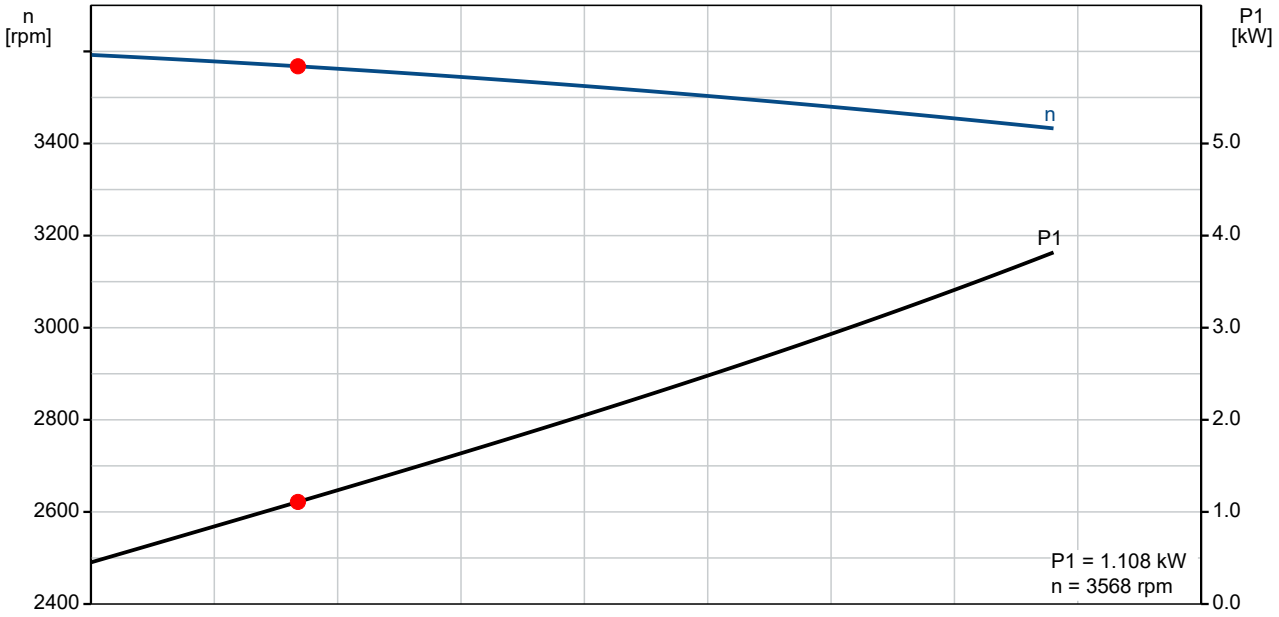

GRUNDFOS

Company name:
Created by:
Phone:

Date: 9/28/2017

51536155 25S30-15 60 Hz

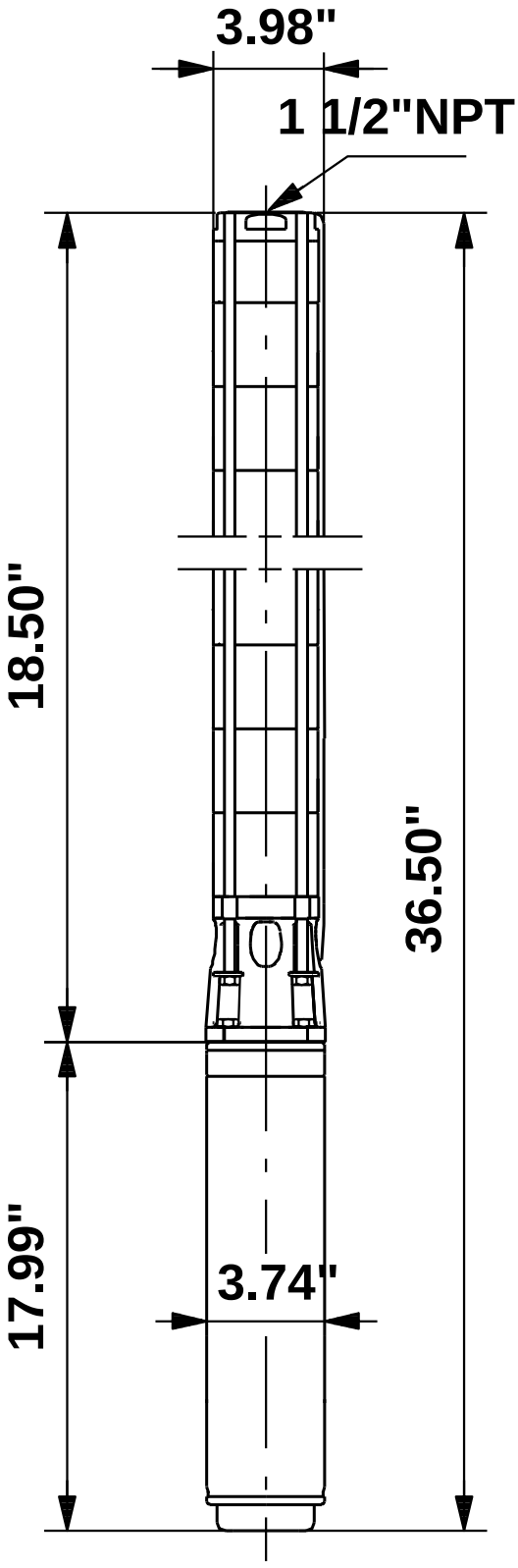

Note! All units are in [mm] unless otherwise stated.
Disclaimer: This simplified dimensional drawing does not show all details.

GRUNDFOS

Company name:
Created by:
Phone:

Date: 9/28/2017

51536155 25S30-15 60 Hz

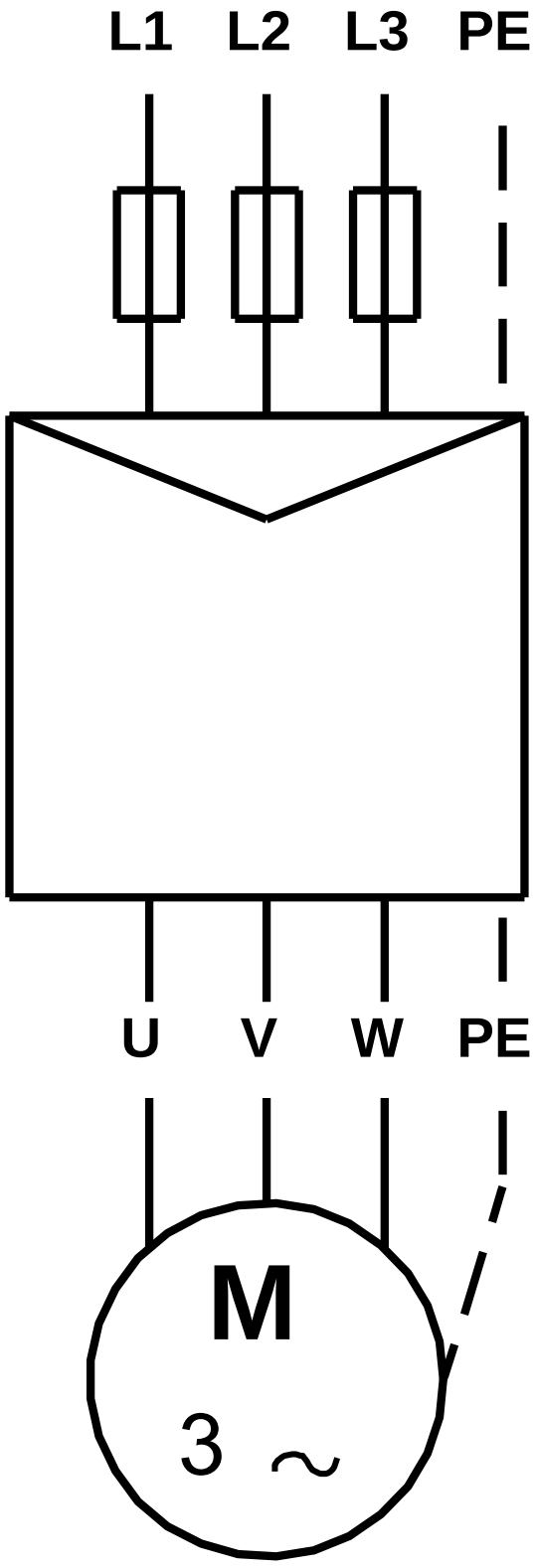

All units are [mm] unless otherwise presented.

Company name:
Created by:
Phone:

Date: 9/28/2017

Position	Count	Description
	1	**MS 4000**

Product photo could vary from the actual product

Product No.: 96405814
The motor is a 3-phase motor of the canned type with a sand shield, liquid-lubricated bearings and pressure-equalizing diaphragm.

Technical:

Shaft seal for motor:	HM/CER
Approvals on nameplate:	CE,EAC,CSA
Motor version:	T40

Materials:

Motor:	Stainless steel DIN W.-Nr. 1.4301 AISI 304

Installation:

Maximum ambient pressure:	870 psi
Motor diameter:	4 inch

Electrical data:

Motor type:	MS4000
Rated power - P2:	7.5 HP
Main frequency:	60 Hz
Rated voltage:	3 x 440-460 V
Voltage tolerance:	+6/-10 %
Service factor:	1,15
Rated current:	12,8-12,6 A
Maximum current consumption:	12.8 A
Starting current:	570-620 %
Cos phi - power factor:	0.87-0,82
Rated speed:	3440-3460 rpm
Locked-rotor torque:	180-200 %
Moment of inertia:	0.069 lb ft²
Start. method:	direct-on-line
Enclosure class (IEC 34-5):	IP68
Insulation class (IEC 85):	F
Built-in temperature transmitter:	yes
Winding resistance:	3,28 ohm

Others:

Net weight:	59.5 lb

Company name:
Created by:
Phone:

Date: 9/28/2017

Description	Value
General information:	
Product name:	MS 4000
Product No.:	96405814
EAN:	5700391231650
Technical:	
Shaft seal for motor:	HM/CER
Approvals on nameplate:	CE,EAC,CSA
Model:	B
Motor version:	T40
Materials:	
Motor:	Stainless steel
	DIN W.-Nr. 1.4301
	AISI 304
Installation:	
Maximum ambient pressure:	870 psi
Motor diameter:	4 inch
Staybolt:	5/16-24 UNF
Electrical data:	
Motor type:	MS4000
Rated power - P2:	7.5 HP
KVA code:	J
Main frequency:	60 Hz
Rated voltage:	3 x 440-460 V
Voltage tolerance:	+6/-10 %
Service factor:	1,15
Rated current:	12,8-12,6 A
Maximum current consumption:	12.8 A
Starting current:	570-620 %
Cos phi - power factor:	0.87-0,82
Rated speed:	3440-3460 rpm
Locked-rotor torque:	180-200 %
Moment of inertia:	0.069 lb ft²
Axial load max:	992 lb
Start. method:	direct-on-line
Enclosure class (IEC 34-5):	IP68
Insulation class (IEC 85):	F
Motor protection:	NONE
Thermal protec:	external
Built-in temperature transmitter:	yes
Winding resistance	3,28 ohm
Others:	
Net weight:	59.5 lb

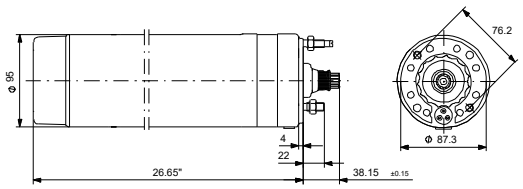

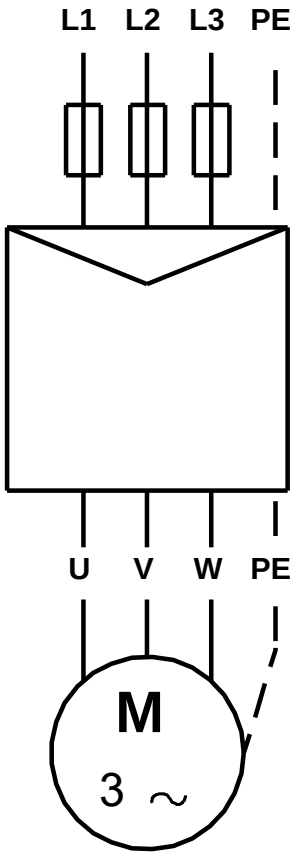

Company name:
Created by:
Phone:

Date: 9/28/2017

96405814 MS 4000 60 Hz

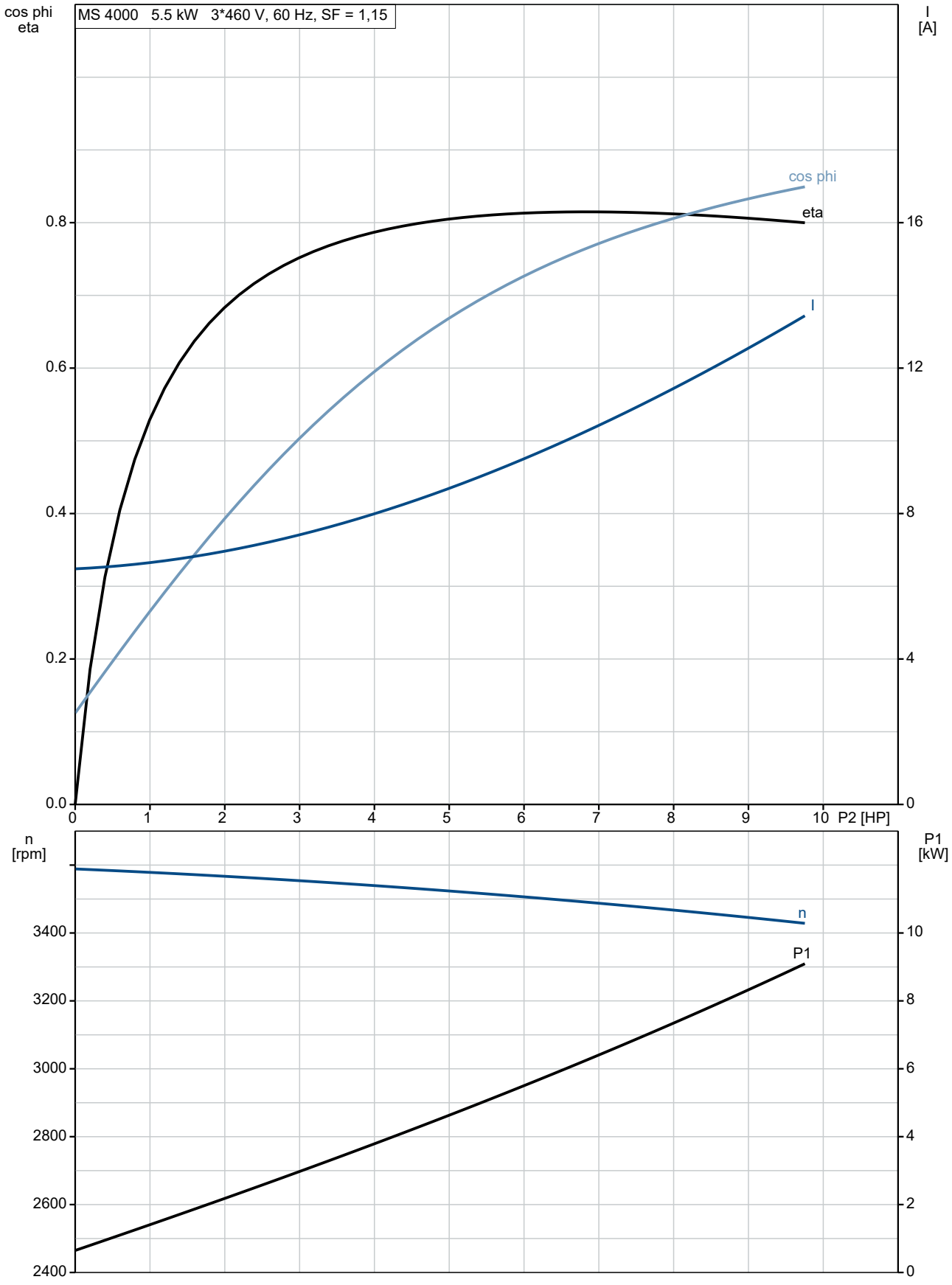

Company name:
Created by:
Phone:

Date: 9/28/2017

96405814 MS 4000 60 Hz

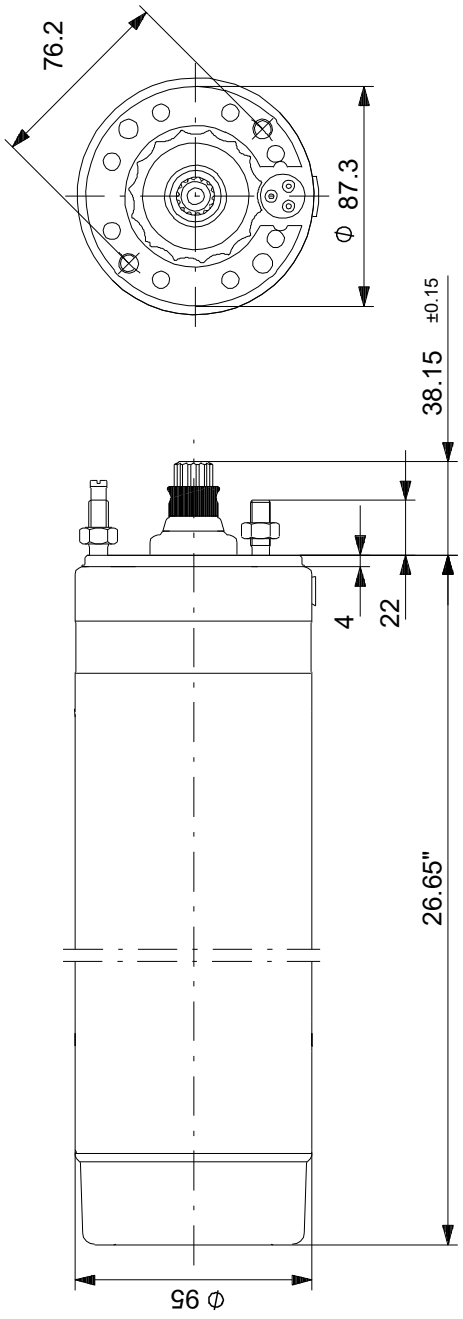

Note! All units are in [mm] unless otherwise stated.
Disclaimer: This simplified dimensional drawing does not show all details.

Company name:
Created by:
Phone:

Date: 9/28/2017

96405814 MS 4000 60 Hz

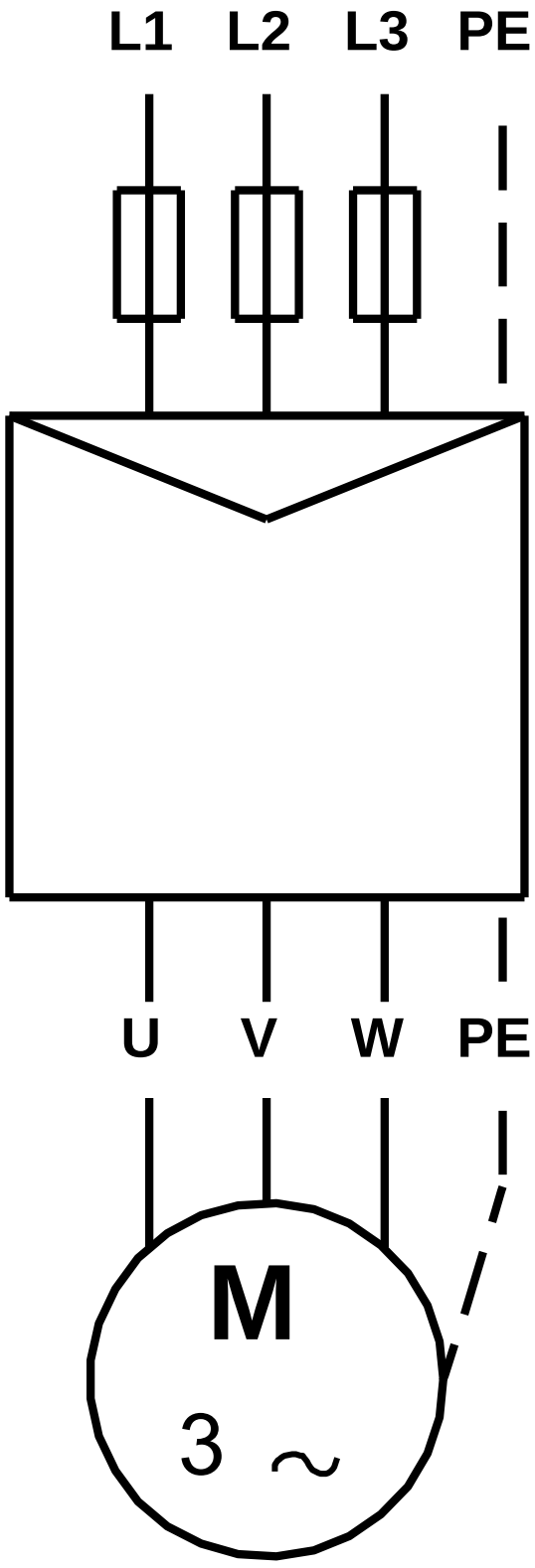

All units are [mm] unless otherwise presented.

Company name:
Created by:
Phone:

Date: 21/09/2017

Position	Qty.	Description
	1	**45S75-15**

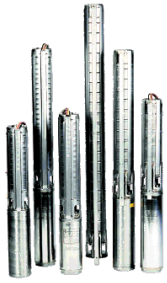

Note! Product picture may differ from actual product

Product No.: 98924592

Multi-stage submersible pump for raw water supply, groundwater lowering and pressure boosting. The pump is suitable for pumping clean, thin, non-agressive liquids without solid particles or fibres.

The pump is made entirely of Stainless steel DIN W.-Nr. EN 1.4301.

The motor is a 3-phase motor with sand shield, liquid-lubricated bearings and pressure equalizing diaphragm.

Liquid:

Pumped liquid:	Water
Maximum liquid temperature:	104 °F
Liquid temperature during operation:	68 °F
Density:	62.29 lb/ft³

Technical:

Speed for pump data:	3450 rpm
Rated flow:	47.1 US GPM
Rated head:	367.5 ft
Shaft seal for motor:	HM/CER
Approvals on nameplate:	CE,EAC,CSA
Curve tolerance:	ISO9906:2012 3B
Motor version:	T40

Materials:

Pump:	Stainless steel EN 1.4301 AISI 304
Impeller:	Stainless steel EN 1.4301 AISI 304
Motor:	Stainless steel DIN W.-Nr. 1.4301 AISI 304

Installation:

Maximum ambient pressure:	870 psi
Pump outlet:	2"NPT
Motor diameter:	4 inch

Electrical data:

Motor type:	MS4000
Rated power - P2:	7.5 HP
Mains frequency:	60 Hz
Rated voltage:	3 x 440-460 V
Service factor:	1,15
Rated current:	12,8-12,6 A

Position	Qty.	Description	
		Starting current:	570-620 %
		Cos phi - power factor:	0.87-0,82
		Rated speed:	3440-3460 rpm
		Enclosure class (IEC 34-5):	IP68
		Insulation class (IEC 85):	F
		Built-in temp. transmitter:	yes
		Others:	
		ErP status:	EuP Standalone/Prod.
		Net weight:	86 lb
		Gross weight:	98.6 lb
		Shipping volume:	2.4 ft³

Company name:
Created by:
Phone:

Date: 21/09/2017

98924592 45S75-15 60 Hz

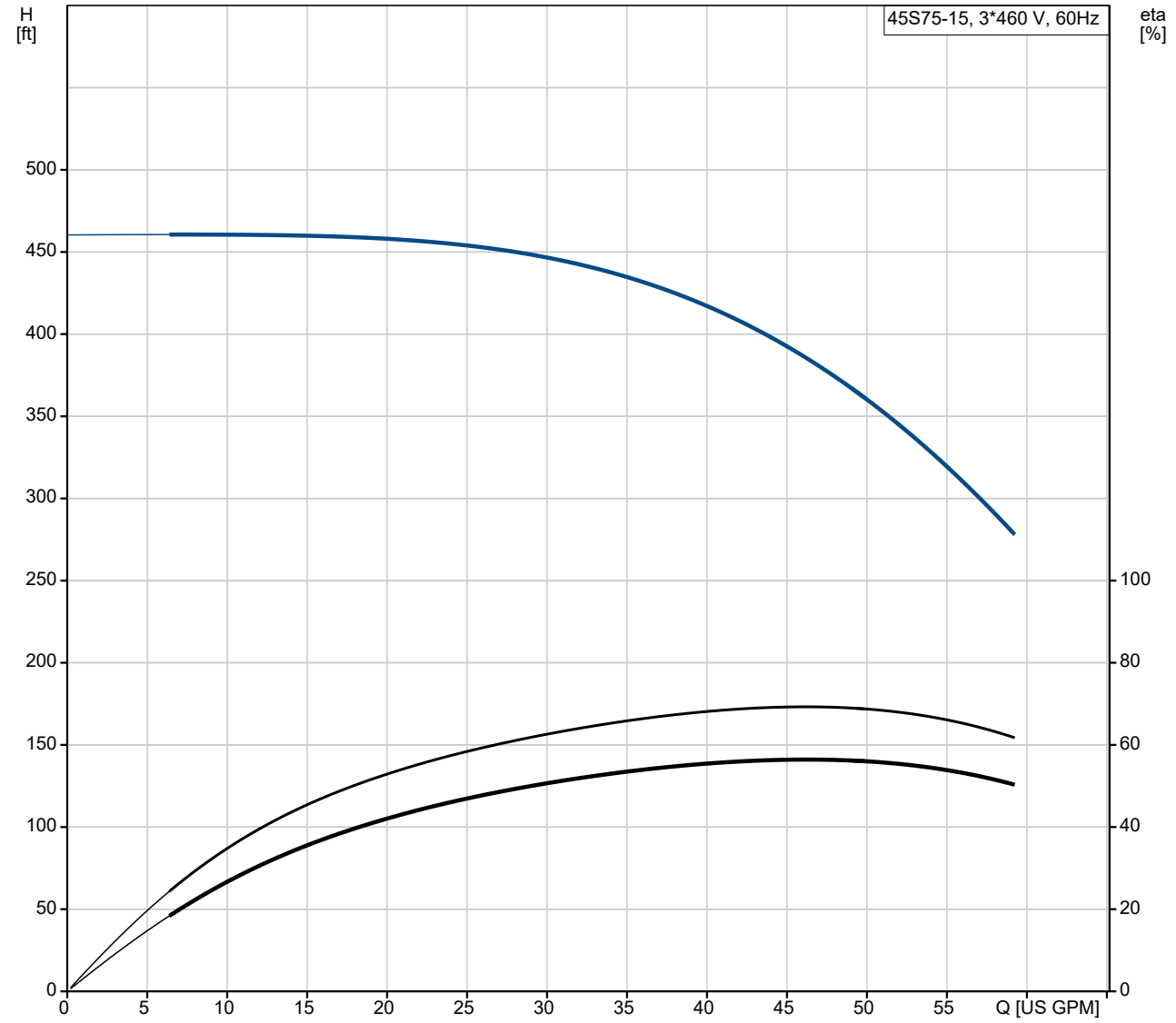

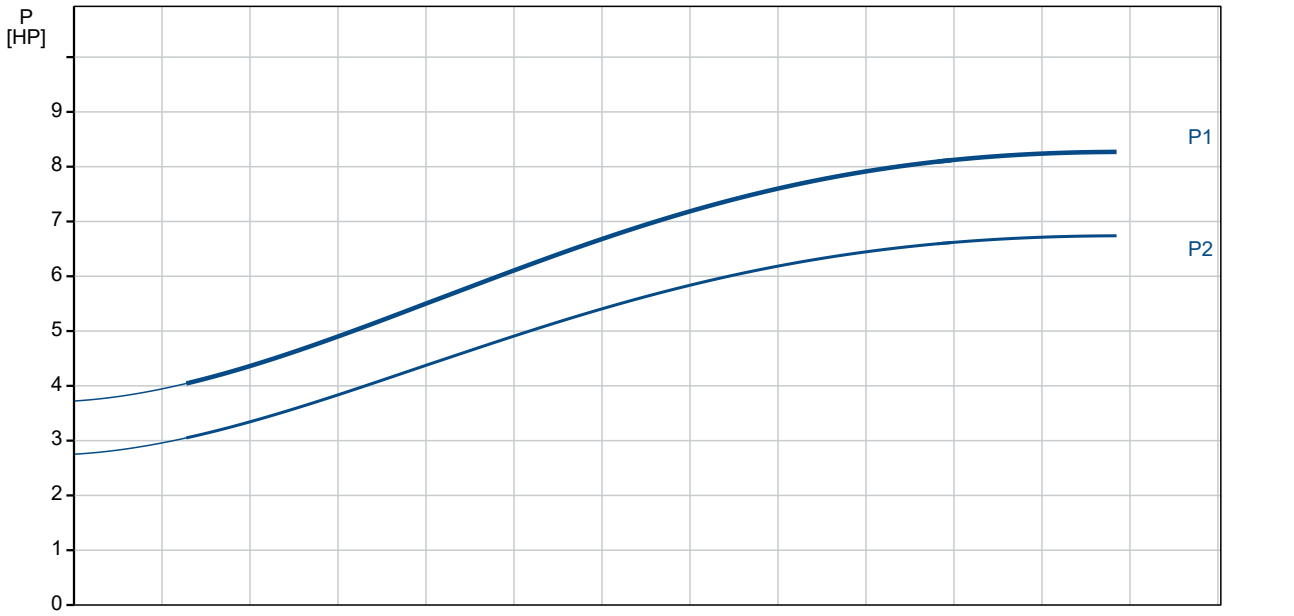

Company name:
Created by:
Phone:

Date: 21/09/2017

Description	Value
General information:	
Product name:	45S75-15
Product No:	98924592
EAN number:	5712603665597
Technical:	
Speed for pump data:	3450 rpm
Rated flow:	47.1 US GPM
Rated head:	367.5 ft
Impeller reduc.:	NONE
Shaft seal for motor:	HM/CER
Approvals on nameplate:	CE,EAC,CSA
Curve tolerance:	ISO9906:2012 3B
Stages:	15
Model:	A
Valve:	YES
Motor version:	T40
Materials:	
Pump:	Stainless steel
	EN 1.4301
	AISI 304
Impeller:	Stainless steel
	EN 1.4301
	AISI 304
Motor:	Stainless steel
	DIN W.-Nr. 1.4301
	AISI 304
Installation:	
Maximum ambient pressure:	870 psi
Pump outlet:	2"NPT
Motor diameter:	4 inch
Liquid:	
Pumped liquid:	Water
Maximum liquid temperature:	104 °F
Liquid temperature during operation:	68 °F
Density:	62.29 lb/ft³
Electrical data:	
Motor type:	MS4000
Applic. motor:	NEMA
Rated power - P2:	7.5 HP
KVA code:	J
Mains frequency:	60 Hz
Rated voltage:	3 x 440-460 V
Service factor:	1,15
Rated current:	12,8-12,6 A
Starting current:	570-620 %
Cos phi - power factor:	0.87-0,82
Rated speed:	3440-3460 rpm
Axial load max:	992 lb
Enclosure class (IEC 34-5):	IP68
Insulation class (IEC 85):	F
Motor protec:	NONE
Thermal protec:	external
Built-in temp. transmitter:	yes
Motor No:	96405814

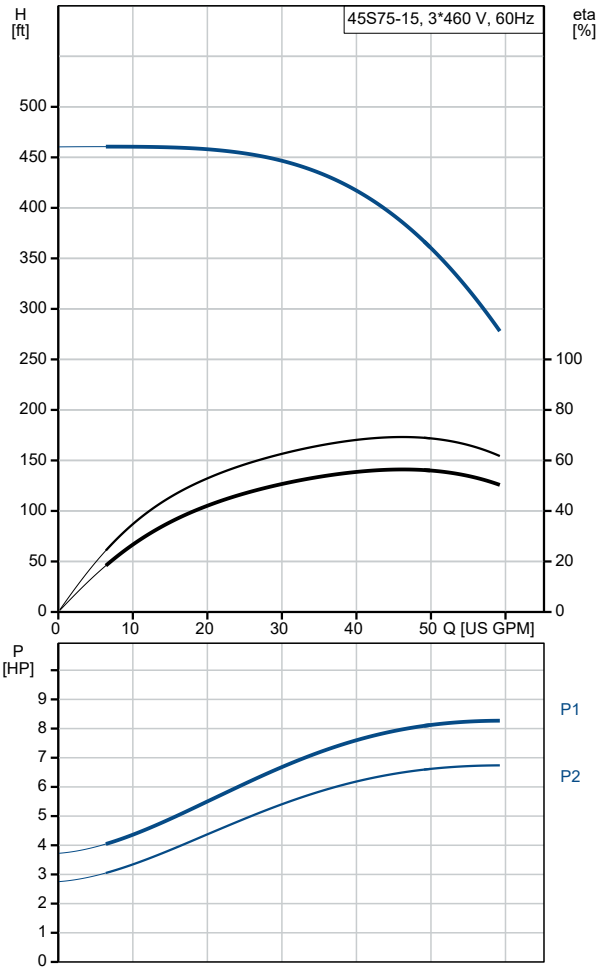

GRUNDFOS

Company name:
Created by:
Phone:

Date: 21/09/2017

Description	Value
Others:	
ErP status:	EuP Standalone/Prod.
Net weight:	86 lb
Gross weight:	98.6 lb
Shipping volume:	2.4 ft³

Company name:
Created by:
Phone:

Date: 21/09/2017

98924592 45S75-15 60 Hz

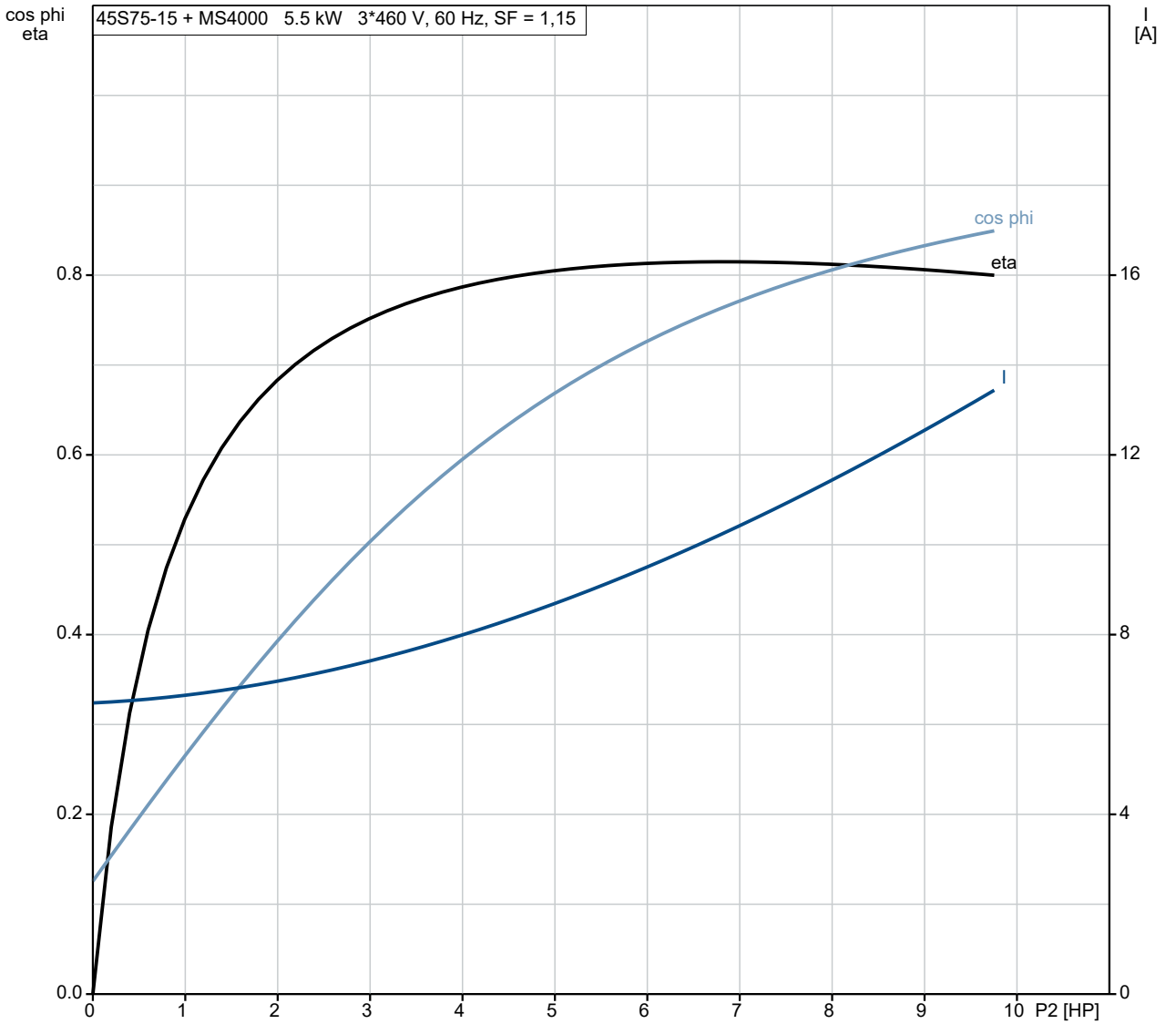

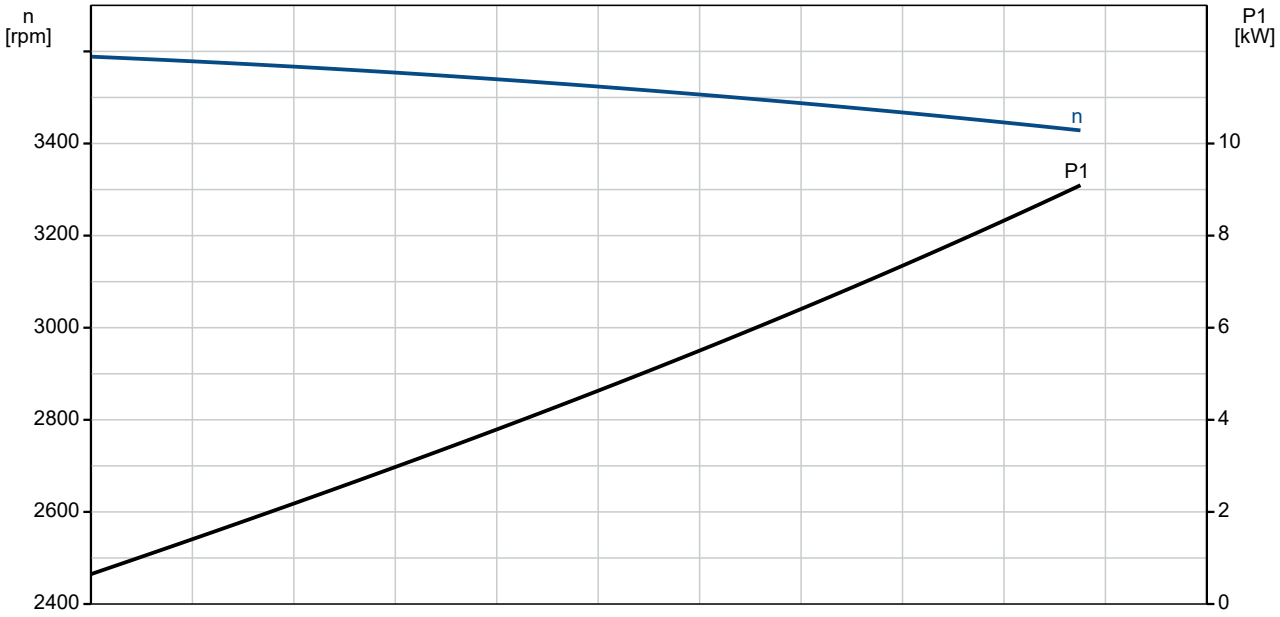

GRUNDFOS

Company name:
Created by:
Phone:

Date: 21/09/2017

98924592 45S75-15 60 Hz

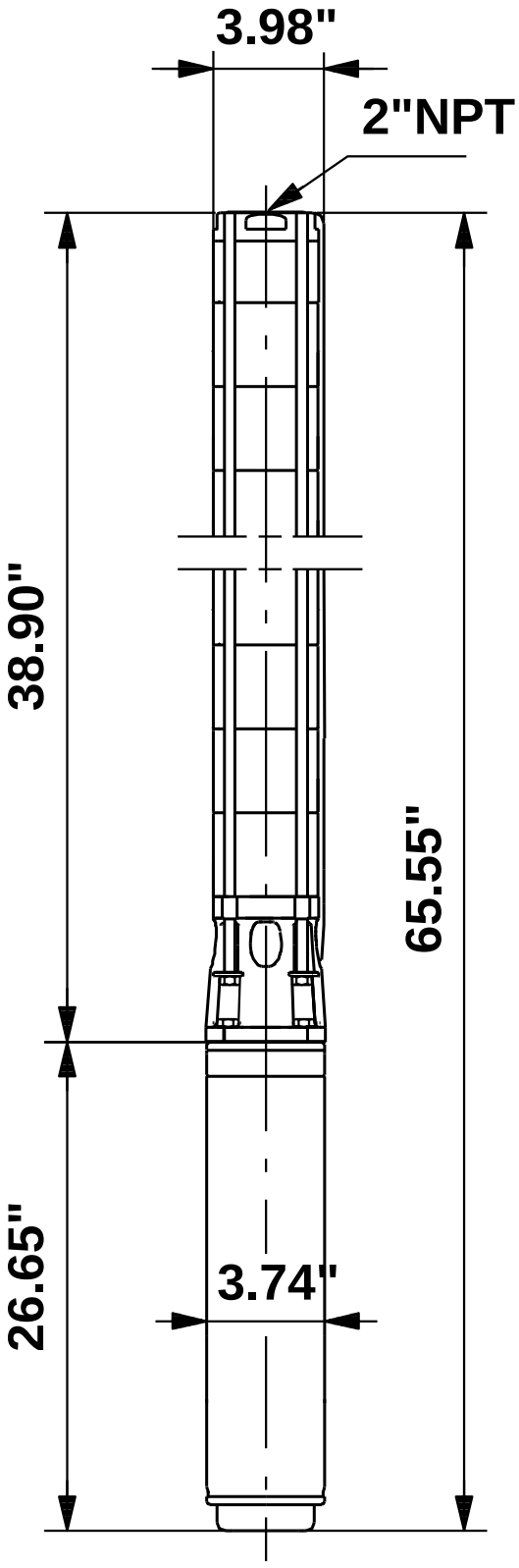

Note! All units are in [mm] unless others are stated.
Disclaimer: This simplified dimensional drawing does not show all details.

Company name:
Created by:
Phone:

Date: 21/09/2017

98924592 45S75-15 60 Hz

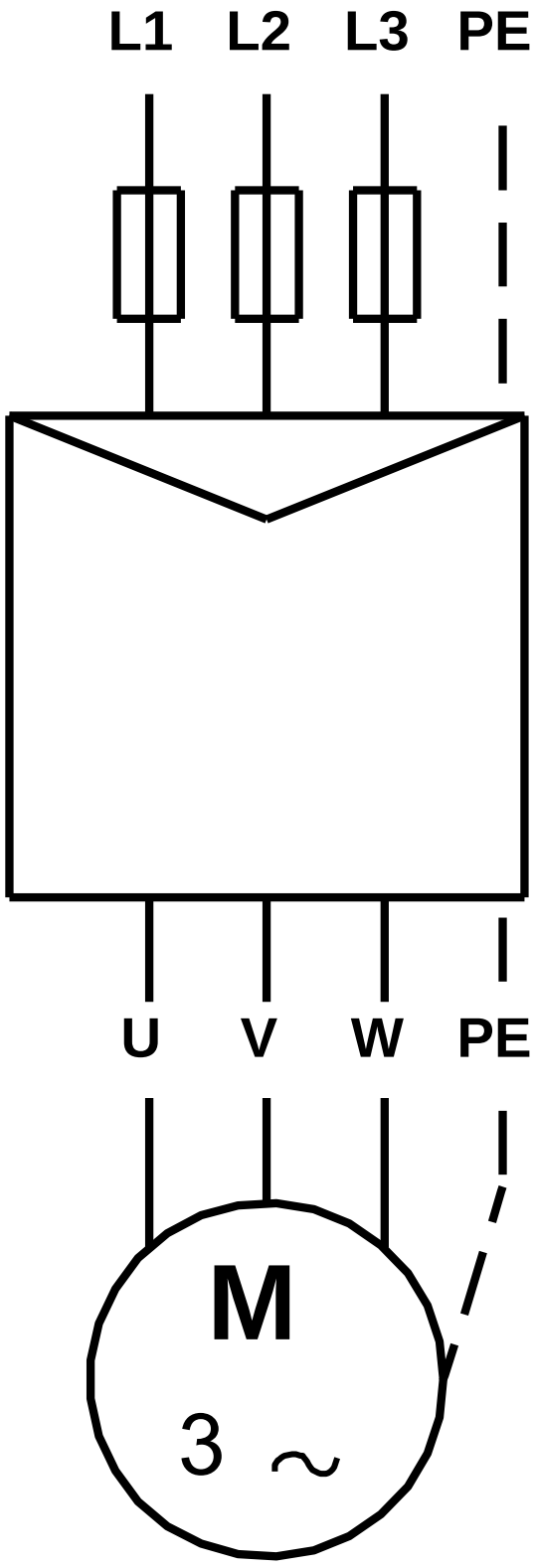

Note! All units are in [mm] unless others are stated.

MODULINE™ Multi-Bag Filter Housing System

Modular system for continuous flow capability, higher efficiency and lower costs

Eaton's MODULINE multi-bag filter housing systems are double or modular multi-bag units designed for applications where the flow rate is too high for a single bag filter housing.

This multi-bag filter housing system provides a compact and efficient assembly of two up to eight single bag filter housings. Its space-saving design can be readily expanded with additional housing units and extra banks to provide the highest level of flexibility for process requirements. The footprint is smaller than duplexed multi-bag filter housings. Units come standard with filter bag size 02 stainless steel restrainer baskets.

Features

- Can be equipped with the economical FLOWLINE™ or FLOWLINE II single bag filter housing for coarse particle filtration, the SIDELINE™ single bag filter housing for a greater range of applications or the most advanced TOPLINE™ single bag filter housing
- System arrangement assures continuous flow rates. Each unit is individually valved and can be taken off-line in sequence for filter bag change-outs without having to take the complete bank of filters off-line
- Swing bolt cover for quick, easy filter bag change-outs. The TOPLINE single bag filter housing features a domed cover. FLOWLINE and SIDELINE single bag filter housings covers' feature an integrated ergonomic handle
- TOPLINE and SIDELINE models are designed in accordance with Section VIII, Division 1 of the ASME Code
- Easy-action, 1/4-turn ball valves provide precision flow control
- Smooth, bead-blasted finish makes it easy to completely clean the interior

Options

- Available in stainless or carbon steel for high corrosion resistance
- Buna-N® O-rings for the cover are standard. EPDM, Viton®, PTFE encapsulated Viton or silicone rubber seals and gaskets are available
- Optional gauges, vents and pressurize air port with 1/4" threaded cover taps

Viton® is a registered trademark of E. I. du Pont de Nemours and company.

EATON

Powering Business Worldwide

Applications

Coarse filtration > 500 µm	✔
Medium filtration > 10 µm	✔
Fine filtration < 10 µm	
Pre-filtration	✔
Safety filtration	✔
High volume	✔
Batch filtration	
Circuit filtration	
Continuous filtration	✔
Solvents, paints	
Fats and oils	✔
Catalyst, activated carbon	
Acids, bases	
Petrochemicals	✔
Water, waste water	✔
Chemical industry	✔
Pharmaceuticals	
Metal cleaning	✔
Automotive	✔
Electronics	
Food and beverage	
Paint and lacquer	
Water treatment	✔
Galvanic industry	

Dimensions for MODULINE multi-bag filter housing using TOPLINE single bag filter housings

Details on MODULINE multi-bag filter housing assemblies using SIDELINE and FLOWLINE single bag filter housings available on request.

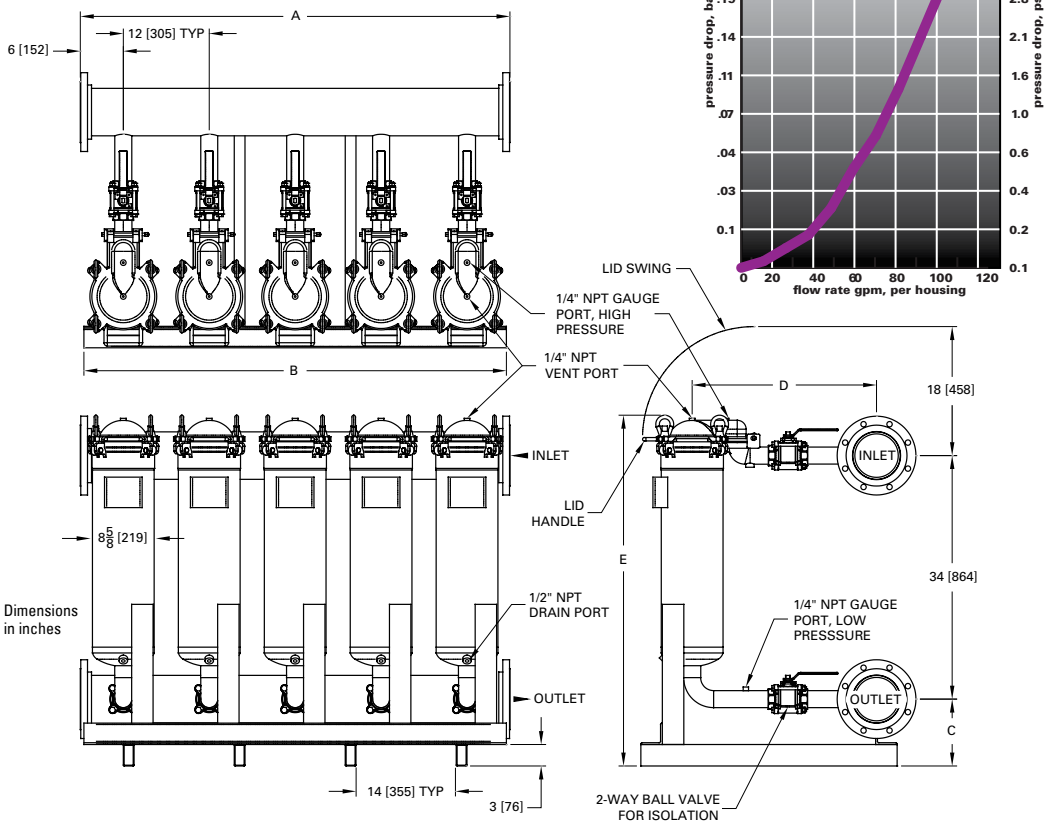

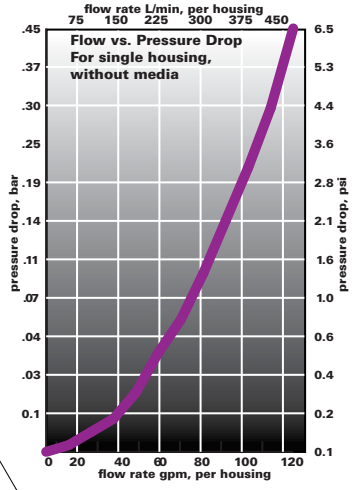

Technical data MODULINE systems with TOPLINE housings

Models	No. of filter bags	Size	Flow rates[1] GPM (m³/h)	Housing volume gal (l)	Housing weight lb (kg)	Max. pressure psi (bar)	Max. temp. °F (°C)	I/O connections	Dimensions - in (mm)				
									A	B	C	D	E
M-TBF-0202	2	2	225 (51)	16.5 (62.5)	320 (145.1)	150 (10)	400 (160)	3" flange	24 (610)	23 (584)	7-3/4 (197)	24-3/16 (614)	47-1/2 (1,207)
M-TBF-0302	3	2	340 (77)	25.7 (104.9)	490 (222.3)	150 (10)	400 (160)	4" flange	36 (914)	35 (889)	8-1/4 (210)	24-11/16 (627)	48 (1,219)
M-TBF-0402	4	2	400 (91)	35 (132.5)	630 (285.8)	150 (10)	400 (160)	4" flange	48 (1,219)	47 (1,194)	8-1/4 (210)	24-11/16 (627)	48 (1,219)
M-TBF-0502	5	2	560 (127)	54.2 (205.2)	800 (362.9)	150 (10)	400 (160)	6" flange	60 (1,524)	59 (1,499)	9-5/16 (236)	25-3/4 (654)	49-1/16 (1,246)
M-TBF-0602	6	2	680 (154)	65.5 (248)	950 (430.9)	150 (10)	400 (160)	6" flange	72 (1,829)	71 (1,803)	9-5/16 (236)	25-3/4 (654)	49-1/16 (1,246)
M-TBF-0702	7	2	790 (179)	76.7 (290.3)	1100 (499)	150 (10)	400 (160)	6" flange	84 (2,134)	83 (2,108)	9-5/16 (236)	25-3/4 (654)	49-1/16 (1,246)
M-TBF-0802	8	2	900 (204)	86 (325.6)	1250 (567)	150 (10)	400 (160)	6" flange	96 (2,438)	95 (2,413)	9-5/16 (236)	25-3/4 (654)	49-1/16 (1,246)

[1] Maximum theoretical flow based on water viscosity, filter bag specific.

North America
44 Apple Street
Tinton Falls, NJ 07724
Toll Free: 800 656-3344
(North America only)
Tel: +1 732 212-4700

Europe/Africa/Middle East
Auf der Heide 2
53947 Nettersheim, Germany
Tel: +49 2486 809-0

Friedensstraße 41
68804 Altlußheim, Germany
Tel: +49 6205 2094-0

An den Nahewiesen 24
55450 Langenlonsheim, Germany
Tel: +49 6704 204-0

China
No. 3, Lane 280,
Linhong Road
Changning District, 200335
Shanghai, P.R. China
Tel: +86 21 5200-0099

Singapore
4 Loyang Lane #04-01/02
Singapore 508914
Tel: +65 6825-1668

Brazil
Rua Clark, 2061 - Macuco
13279-400 - Valinhos, Brazil
Tel: +55 11 3616-8400

For more information, please email us at *filtration@eaton.com* **or visit** *www.eaton.com/filtration*

© 2017 Eaton. All rights reserved. All trademarks and registered trademarks are the property of their respective owners. All information and recommendations appearing in this brochure concerning the use of products described herein are based on tests believed to be reliable. However, it is the user's responsibility to determine the suitability for his own use of such products. Since the actual use by others is beyond our control, no guarantee, expressed or implied, is made by Eaton as to the effects of such use or the results to be obtained. Eaton assumes no liability arising out of the use by others of such products. Nor is the information herein to be construed as absolutely complete, since additional information may be necessary or desirable when particular or exceptional conditions or circumstances exist or because of applicable laws or government regulations.

US
EF-FBH-16
03-2017

Powering Business Worldwide

ITEM NUMBER	BAG SIZE	A IN. / MM	B IN. / MM	C IN. / MM	D IN. / MM	E IN. / MM	F IN. / MM	G IN. / MM	H IN. / MM	J IN. / MM	K IN. / MM	L IN. / MM	M IN. / MM	N IN. / MM	P IN. / MM	Q IN. / MM	R IN. / MM	S IN. / MM	WEIGHT LBS / KGS
F3AVFB20402	02	7.677 / 195	43-1/16 / 1094	49-15/16 / 1268	77 / 1956	12 / 305	6 / 152.5	35-5/16 / 897	7-3/4 /197	24-9/16 / 624	38-1/16 / 967	24 / 610	16 / 406	4 / 102	23 / 584	4 / 102	34-1/4 / 870	28-1/4 / 718	330 / 149.6

REV	DATE	CHANGE	ECR	BY	APP
A	6/20/2011	NEW RELEASE	0057812	FJM	FM

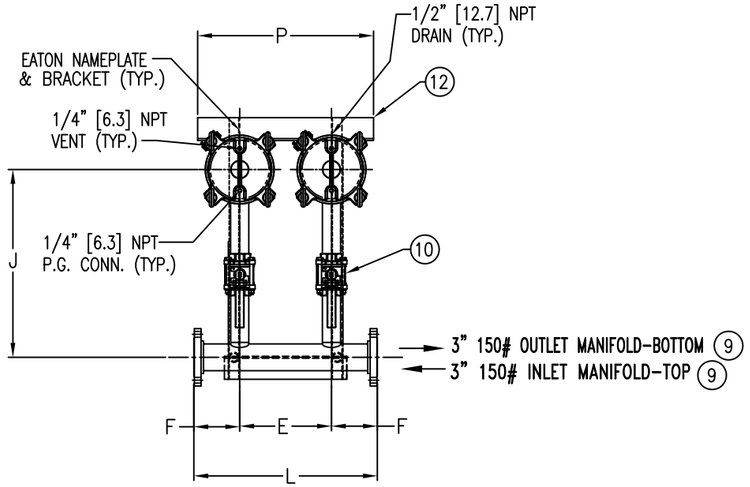

VIEW A–A

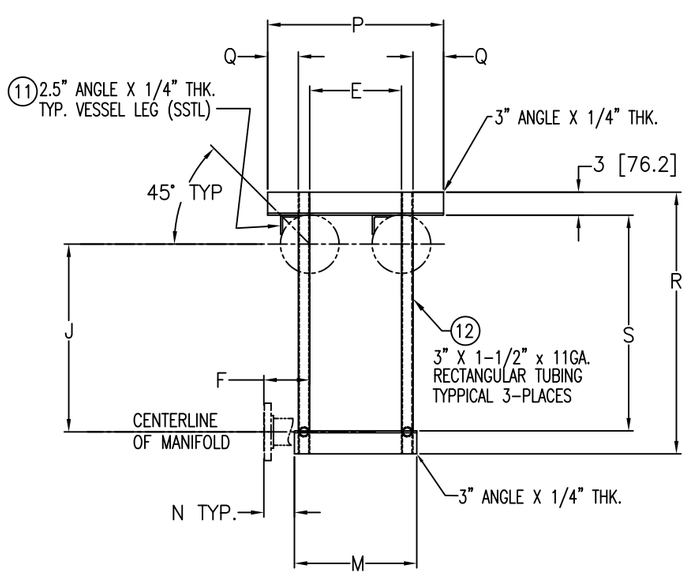

VIEW B–B
MOUNTING DETAIL

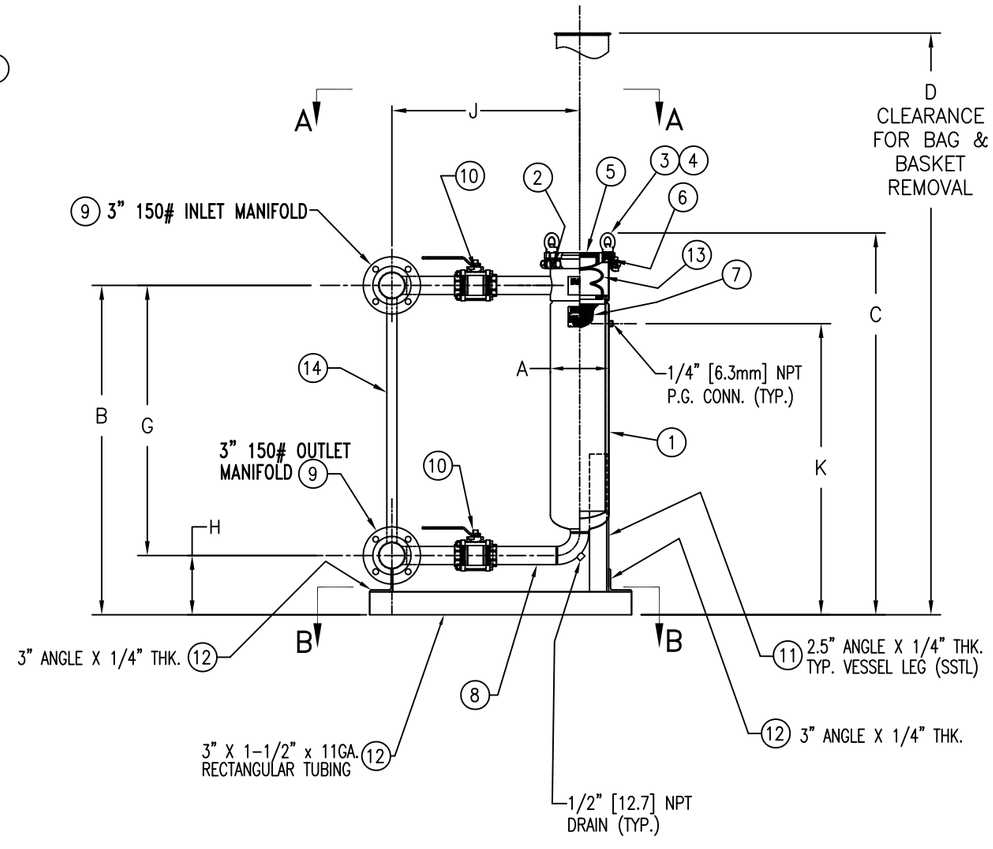

NO.	PART NAME	MATERIAL
1	BODY	316 STAINLESS STEEL
2	NUT/BOLT	STEEL, ZINC PLATED
3	EYE BOLT	STEEL, ZINC PLATED
4	EYE NUT	STEEL, ZINC PLATED
5	COVER	316 STAINLESS STEEL
6	O-RING	BUNA-N
7	RESTRAINER BASKET	316 STAINLESS STEEL
8	2" ELBOW ASSEMBLY	316 STAINLESS STEEL
9	3" 150# MANIFOLDS	316 STAINLESS STEEL
10	2" 1000# WOG BALL VALVE	SEE NOTE 4
11	VESSEL ANGLE LEG SUPPORT	STAINLESS STEEL
12	SKID ASSEMBLY	STAINLESS STEEL
13	BAG HOLD DOWN	KYNAR
14	MANIFOLD SUPPORT	304 STAINLESS STEEL

NOTES:

1. INLET/OUTLET 3" 150# CONNECTIONS PER ANSI B16.5.
2. MAWP: 150 PSI @ 250° F (10.3 BAR @ 121.1° C) MDMT: -20° F @ 150 PSI (-28.9° C @ 10.3 BAR)
3. ALL DIMENSIONS ARE IN INCHES & [ ] MILLIMETERS.
4. 2" SOCKET WELD BALL VALVES STAINLESS STEEL EATON STANDARD P/N 41003 FULL PORT 3 PIECE.

CUSTOMER: GHX INCORPORATED
P.O. NO.: 6022002
SALES ORDER NO.: S220450
QUANTITY: ONE ASSEMBLY
VESSEL CODE: M-FBF2-0202-AB10-030A-NL-B-NSS-VAL

ELECTRONIC FILE NAME: MFBF202XS.DWG
REF. ECR 0057812 DATE 06/20/11

UNAUTHORIZED USE, MANUFACTURE OR REPRODUCTION IN WHOLE OR IN PART IS PROHIBITED. DRAWING, DESIGN AND OTHER DISCLOSURES PROPERTY OF EATON FILTRATION, LLC

EATON FILTRATION, LLC
70 WOOD AVENUE SOUTH, ISELIN, NEW JERSEY 08830

NAME FLOWLINE 2 (FBF2-0202) FILTER VESSEL
3" 150# IN/OUT FLANGE MANIFOLD
STAINLESS STEEL W/BALL VALVES

DRAWN	DATE	CERT.	DATE
FJM	06/20/11	LH	06/20/11

SIZE	DWG NO	REV
B	MFBF202XS	A

REV 5/01

model 8770

Indoor Gravity Fed Emergency Shower

FEATURES & BENEFITS

CONSTRUCTION

Galvanized pipe, bronze valves, fiberglass tank and galvanized structural members provide superior defense in a highly corrosive environment.

QUALITY CONTROL

Fully assembled and tested for quick placement and hook-up.

EYE/FACE WASH

AXION® MSR eye/face wash head (patent pending) uses an inverted directional laminar flow to sweep contaminants away from the vulnerable nasal cavity.

SUPERIOR SAFETY

Enhanced victim comfort with AXION® eye/face wash and shower incorporating bronze valves for easy activation. Exceeds ANSI tepid water constant flow requirements (17+ min @20 GPM with 450 gallon tank) with tepid water to an insulated booth that is heated to 70° F (21° C) creating a comfortable environment for the user.

OTHER AVAILABLE CONFIGURATIONS

Class 1 Div 2 | Nema 4 and 4X standards | All Stainless Steel | Low Lead

VALVES

Eye/face wash valve is designed to make the flushing of contaminants occur with the simple push of a stainless steel flag. Shower ball valve is designed to make the flushing of fluid occur with the pull of a triangular lever. Both are made of bronze.

OPTIONS

For more information, visit www.hawsco.com or call (888) 640-4297.

SPECIFICATIONS

Model 8770 shower and eyewash shall include a galvanized steel structure with bright yellow fiberglass side panels and 430 gallon (1628 L) overhead tank. The emergency flushing is provided by a hydrodynamic showerhead as well as the medically acclaimed AXION® MSR eyewash. (Patent pending) This system is designed to operate with a number of electrical options. Emergency flushing is provided by a patent pending flow control into a hydrodynamic drench shower and the medically superior AXION MSR eye/facewash. The entire system meets the ANSI Z358.1 standard for emergency eyewash and shower equipment.

APPLICATIONS

Perfect for mining, Petro-Chemical, bio-diesel, and ethanol processing facilities as well any other remote indoor location without a potable water supply where a drench shower and eyewash are required.

DISCLAIMER: Continued product improvements make specifications subject to change without notice. Check www.hawsco.com for the latest product information and updates.

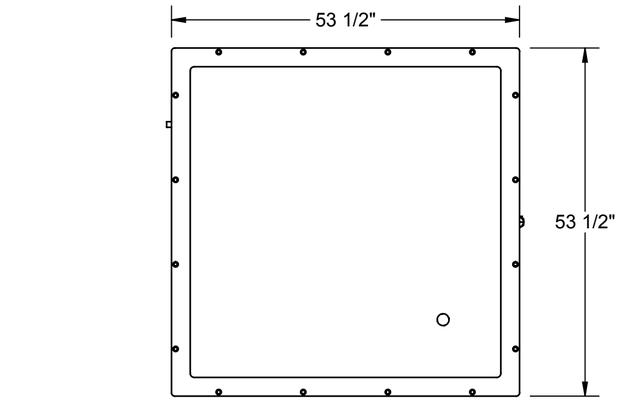

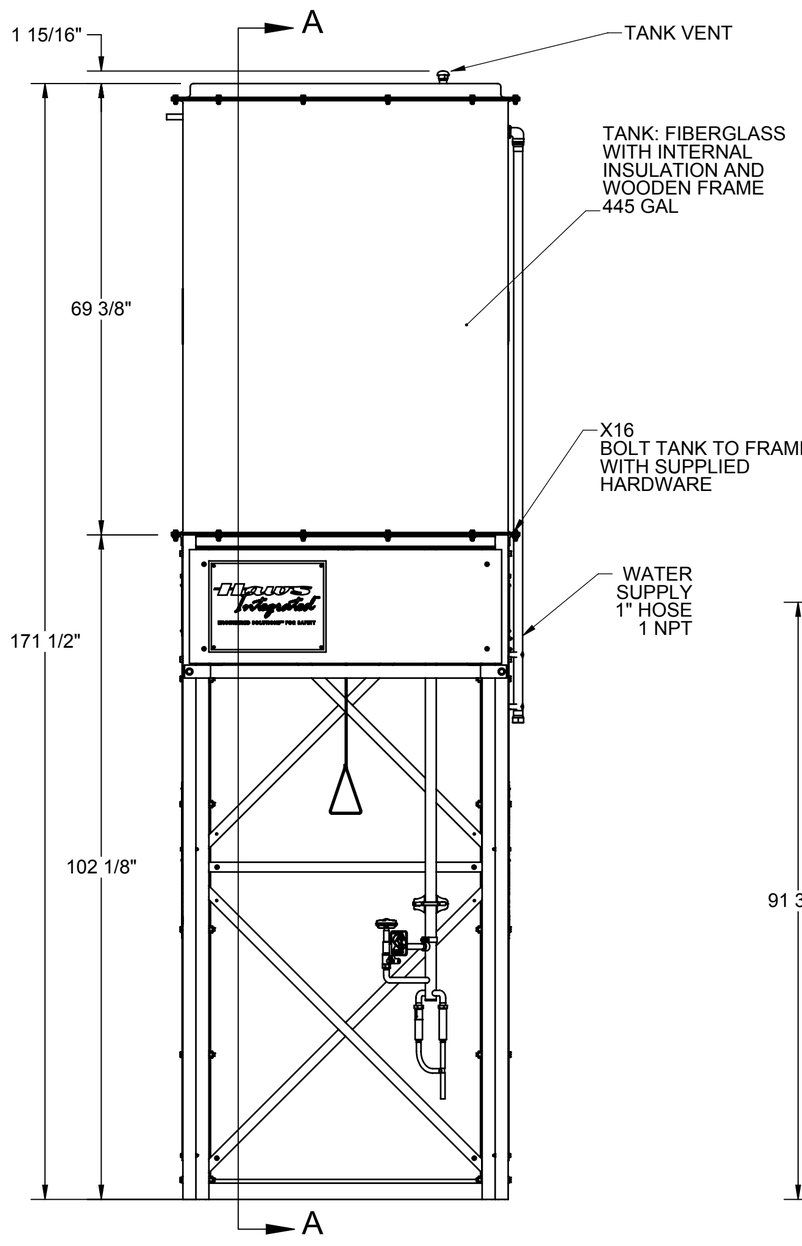

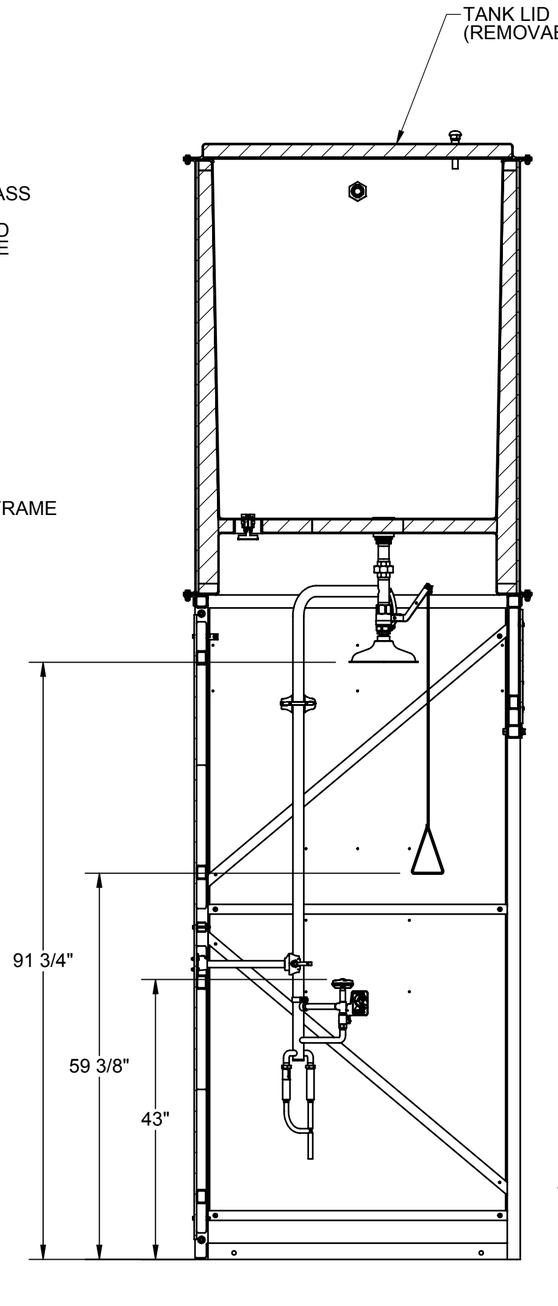

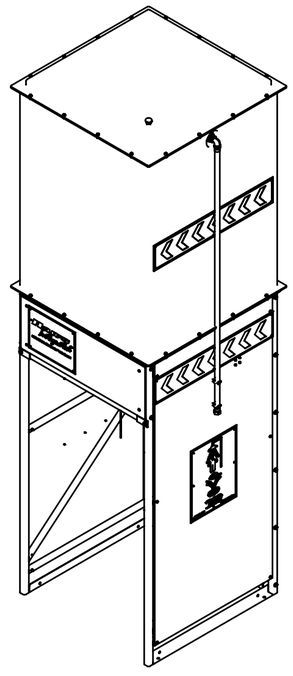

SECTION A-A

SCALE 1 : 18

APPROVALS	DATE
DRAWN	
CHECKED	
APPROVED	
CUSTOMER INFO/TAG #:	

Haws
1455 KLEPPE LANE
SPARKS, NEVADA 89431
USA

TITLE
8770 Booth, Tank, and Shower

NOTICE OF PROPRIETARY INFORMATION
INFORMATION CONTAINED HEREIN IS THE SOLE PROPERTY OF HAWS CORPORATION AND THIS DOCUMENT AND THE DATA DISCLOSED HEREIN OR HEREWITH IS NOT TO BE REPRODUCED, USED, OR DISCLOSED IN WHOLE OR IN PART TO ANYONE WITHOUT THE PERMISSION OF HAWS CORPORATION.

THIRD ANGLE PROJECTION

SHOP

SH 1 OF 2

SCALE	SIZE	PART NO.	REV.
1:32	C	8770.25.31	1

© 2014 Haws Corporation - All Rights Reserved. HAWS® and other trademarks used in these materials are the exclusive property of Haws Corporation.

Ingersoll Rand®

Fixed Speed Rotary Screw Compressor

UP6S Series 15-30 hp (11-22 kW)

More Than 140 Years of Compressed Air Innovation

and introduced its first air compressor in 1872. Over the next 140 years, we have continued to develop rugged, reliable, industry-leading rotary screw compressor technologies. No matter what the application, Ingersoll Rand rotary screw technology provides clean, dry air in all operating conditions to meet your specific performance needs, reduce costly downtime and maximize your productivity.

UP6S Series 15-30 hp (11-22 kW)

Offering the same reliability you've come to expect, the well-equipped Ingersoll Rand UP6S Series of oil-flooded rotary screw compressors has now raised the bar in functionality, performance upgrades and improved intelligence. We have designed a complete air solution that captures more information and puts more control into your hands. **With greater control comes greater effectiveness.**

Reliability

- TEFC Tri-Voltage (208-230/460 V) motor allows the unit to adapt to each voltage for all customers
- V-Shield™ technology uses premium PTFE hoses on all oil-carrying lines as well as O-ring face seal connections, virtually eliminating leaks and increasing hose life
- NEMA® 4 enclosure defends against harsh weather conditions
- Power Outage Restart Option (PORO) safely restores the machine to previous settings following power interruption

Productivity

- Poly-V belt premium drive system applies patented automatic tensioning to eliminate belt stretch and increase air output
- Whisper-quiet operation as low as 67 dBA allows for installation closer to point of use, reducing costs and ensuring a better, safer work environment
- The UP6S Total Air System (TAS™) option provides clean, dry air in a single package that minimizes installation costs and space
- Key maintenance components are grouped to provide ease of serviceability
- Electronic Drain Valve (EDV) cost-effectively removes condensate on a set timer

Intelligence

- Xe-70m programmable controllers deliver increased control functionality through an intuitive user interface with large navigation buttons
- Built-in event logging and trip history allow for greater machine usability and peace of mind

Proven Reliability. Robust Design.

High-Efficiency Integrated Compression Module

The airend, interconnecting piping and separation system have all been integrated into one simple design to provide maximum performance, efficiency and serviceability.

1 Total Air System Cabinet

The TAS™ integrated dryer option provides clean, dry air in a single package, minimizing installation costs

2 Advanced Control with Remote Access

The ultimate in intelligent control systems, the Xe-Series controller effortlessly matches compressed air supply to air demand

3 Simple Serviceability

All consumables have been conveniently positioned to facilitate serviceability

4 Long-Life Separation System

Integrated, high-efficiency compression module eliminates leaks and pressure loss, while spin-off separator improves serviceability and maximizes uptime

5 Advanced Cooling

Efficient aftercooler and pre-filter can be accessed from both sides of the compressor for easy cleaning; top discharge simplifies ducting

Flexible Performance You Can Count On

Using sophisticated computer analysis, our product engineering experts developed optimum design features and improved manufacturing techniques. The result is a superior airend with smoother, cooler and quieter operation. A NEMA® Type 4/IP55 TEFC motor provides an energy-efficient solution, even in the harshest operating conditions. The unique Tri-Voltage configuration ensures flexibility in any installation.

Improved Flexibility and Reliability

- Unique Ingersoll Rand Tri-Voltage motor designed for heavy duty industrial applications
- All new TEFC motor improves reliability by protecting motor windings from harsh environmental conditions

Maximized Uptime

- Optimized bearing arrangement reduces resistance and improves power management for greater reliability and endurance
- Airends equipped with robust steel cage ball bearings are engineered for exceptional reliability and efficiency
- Precision machined rotors with coolant paths are integral to the cast housing
- Premium drive system applies patented automatic tensioning to eliminate belt stretch and maximize air output

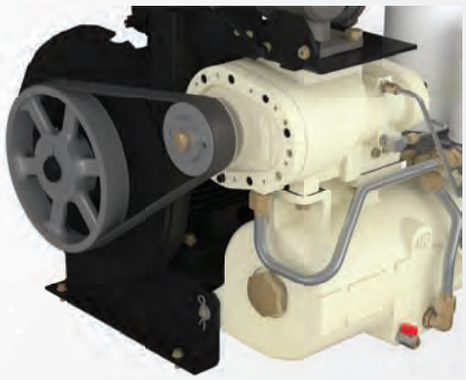

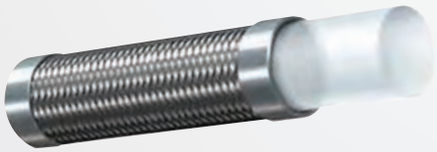

Peace of Mind

- Integrated V-Shield™ technology with robust piping, maintenance-free stainless-steel braided hoses and PTFE seals allow for repeatable, leak-free connections
- Standard package pre-filter prevents contaminates from entering the compressor package

Simple Controls for Advanced Diagnostics

All new Xe-Series programmable control systems have the capability to sequence up to four compressors without additional hardware. This allows for greater ease of operation and peace of mind, complemented by built-in event logging and trip history for superior diagnostics. All these advancements are included in an intuitive LED backlit display.

Progressive Adaptive Control

PAC™ software continuously monitors key operations, such as separator element condition, and adapts system parameters to maximize uptime and increase motor life.

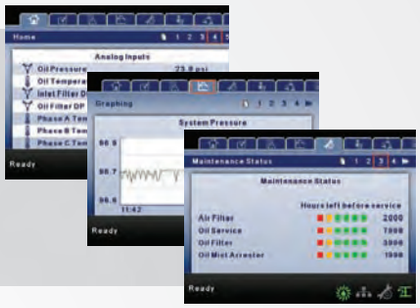

Simple Diagnostics

- Operating status plus data log input and ability to troubleshoot failures*
- Last 15 trips are dated and time-stamped in trip history with sensor readings at time of trip for root cause analysis
- Built-in event log stores up to 250 events such as start/stop, faults/warnings and trips

Dual-Control Operation

- Reliable and effective load/no-load control, along with automatic stop and restart, maximizes flexibility
- Eliminates rapid cycling and destructive condensate build-up in lubricant

Specifications

- 2.75" monochrome display operates in over 30 languages
- Software updates executed via service tool
- Standard Modbus RTU protocol**
- Remote start/stop control enhances ease of operation
- Integrates seamlessly with Xi System Controller
- Ethernet connection supports web-enabled devices*

*Available with ECO option **Can only use one at a time due to shared port

Convenient Choices for a Complete Air Solution

To provide the most comprehensive air solution, Ingersoll Rand UP6S Series 15-30 hp compressors are available with a Total Air System (TAS™) option. These complete cooler and dryer systems come with water separators, drain ports and filters. No matter the capacity, Ingersoll Rand provides the complete answer in a compact solution that fits your air and workspace requirements.

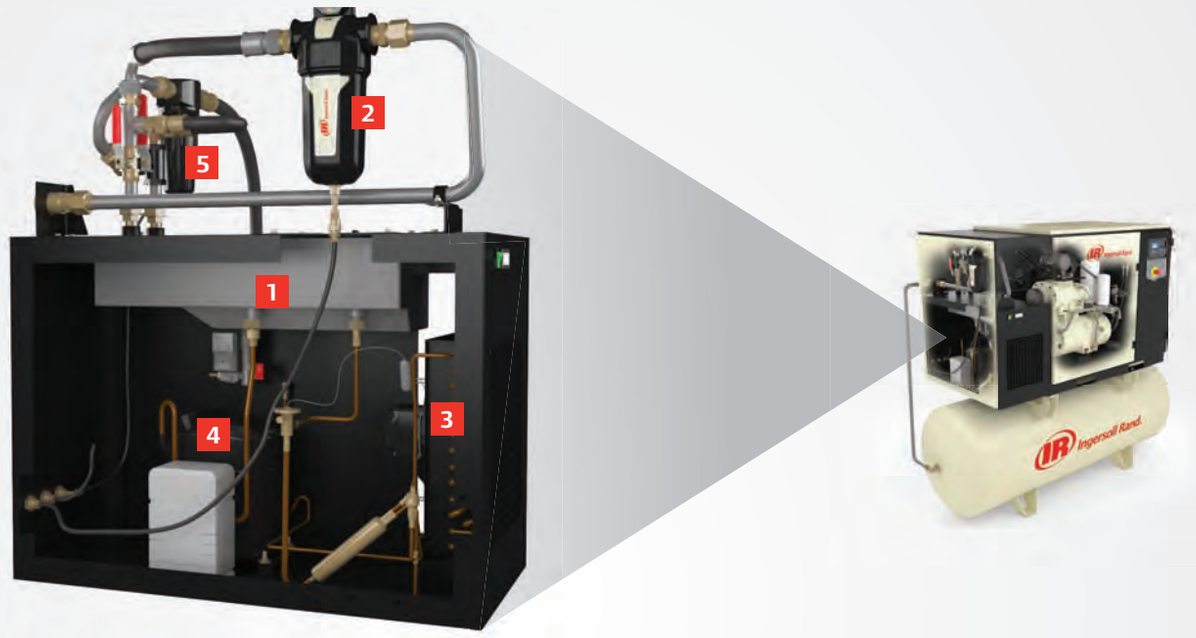

1 3-in-1 heat exchanger

2 High-capacity, general purpose filter

3 Condenser

4 Reliable refrigerant compressor

5 Moisture separator with timed EDV discharges condensate

Energy-Saving Refrigerated Air Dryer

- Particulate removal to 0.1 micron
- High-efficiency, direct expansion refrigerated dryer operates continuously, ensuring constant dew point
- Removes moisture from compressed air, eliminating internal piping rusting, the main cause of premature tool and seal wear

Smart Integration Benefits

- Dry air receiver mounted as a compact package lowers the cost of installation (optional floor mount also available)
- Easy access to all compressor and air treatment components promotes serviceability
- Simplified piping eliminates potential leaks
- Single-point condensate drain system, instead of separate points, reduces installation cost

Compressor Specifications

Ingersoll Rand Fixed Speed – 60 Hz Performance								
	Max. Pressure	Nominal Power		Capacity (FAD)*	Dimensions (Length x Width x Height)		Weight (Air-cooled)	
Model	psig	hp	kW	cfm	in	mm	lb	kg
UP6S-15	125	15	11	65	52 x 36 x 42.5	1,321 x 914 x 1,080	1,183	538
	150	15	11	58	52 x 36 x 42.5	1,321 x 914 x 1,080	1,183	538
UP6S-20	125	20	15	77	52 x 36 x 42.5	1,321 x 914 x 1,080	1,183	538
	150	20	15	67	52 x 36 x 42.5	1,321 x 914 x 1,080	1,183	538
	200	20	15	58	52 x 36 x 42.5	1,321 x 914 x 1,080	1,183	538
UP6S-25	125	25	18	98	52 x 36 x 42.5	1,321 x 914 x 1,080	1,203	547
	150	25	18	92	52 x 36 x 42.5	1,321 x 914 x 1,080	1,203	547
	200	25	18	75	52 x 36 x 42.5	1,321 x 914 x 1,080	1,203	547
UP6S-30	125	30	22	117	52 x 36 x 42.5	1,321 x 914 x 1,080	1,290	586
	150	30	22	112	52 x 36 x 42.5	1,321 x 914 x 1,080	1,290	586
	200	30	22	92	52 x 36 x 42.5	1,321 x 914 x 1,080	1,290	586

	Nominal Power		Dimensions (Length x Width x Height)		Additional Mass	
Mounting Options	hp	kW	in	mm	lb	kg
Integrated Dryer Option	15	11	67 x 36 x 42.5	1,702 x 914 x 1,080	225	102
	20	15	67 x 36 x 42.5	1,702 x 914 x 1,080	225	102
	25	18	67 x 36 x 42.5	1,702 x 914 x 1,080	246	112
	30	22	67 x 36 x 42.5	1,702 x 914 x 1,080	246	112
120 gal Tank-mounted Version	-	-	77.5 x 36 x 72	1,962 x 914 x 1,797	327	147
240 gal Tank-mounted Version	-	-	94 x 36 x 76.5	2,390 x 914 x 1,941	596	269

*FAD (Free Air Delivery) is full package performance including all losses. Tested per ISO 1217:2009 Annex C and is measured at 10 psig lower than maximum pressure on non-TAS units and at maximum pressure on TAS equipped units.

Your Trusted Partner in Compressed Air

Ingersoll Rand products and services optimize total **Cost** of ownership, while maximizing **Availability**, **Reliability** and **Efficiency** for the entire lifecycle of your system

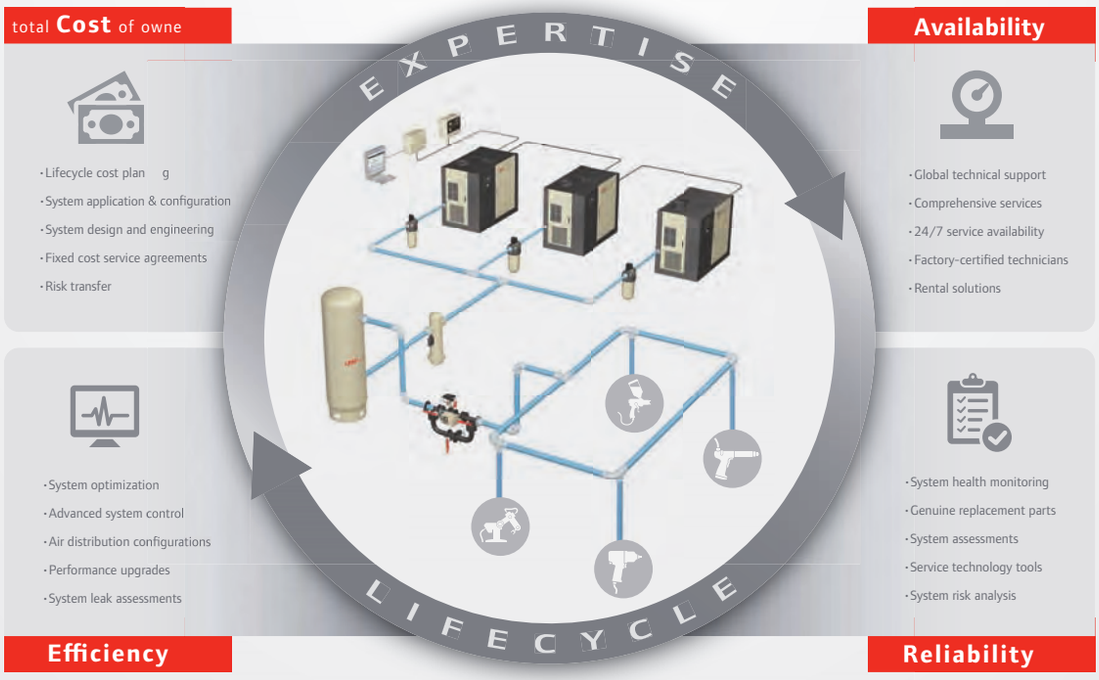

Design • Install • Commission • Operate • Maintain • Extend

Ingersoll Rand (NYSE:IR) advances the quality of life by creating comfortable, sustainable and efficient environments. Our people and our family of brands—including Club Car®, Ingersoll Rand®, Thermo King® and Trane®—work together to enhance the quality and comfort of air in homes and buildings; transport and protect food and perishables; and increase industrial productivity and efficiency. We are a $13 billion global business committed to a world of sustainable progress and enduring results.

www.ingersollrandproducts.com

Distributed by:

Member of Pneurop

Ingersoll Rand, IR, the IR logo, PAC and V-Shield are trademarks of Ingersoll Rand, its subsidiaries and/or affiliates. All other trademarks are the property of their respective owners.

Ingersoll Rand compressors are not designed, intended or approved for breathing air applications. Ingersoll Rand does not approve specialized equipment for breathing air applications and assumes no responsibility or liability for compressors used for breathing air service.

Nothing contained on these pages is intended to extend any warranty or representation, expressed or implied, regarding the product described herein. Any such warranties or other terms and conditions of sale of products shall be in accordance with Ingersoll Rand's standard terms and conditions of sale for such products, which are available upon request.

Product improvement is a continuing goal at Ingersoll Rand. Designs and specifications are subject to change without notice or obligation.

We are committed to using environmentally conscious print practices.

© 2015 Ingersoll Rand IRITS-0715-126

MM 3060-1A

NOTES:

1. FLOW RATE DESIGN: 25-74 GPM; MAX TO 98 GPM
2. MAXIMUM WORKING PRESSURE: 100 PSI.
3. ELECTRICAL REQUIREMENTS:
   CONTROLLER 120V;
   SOLENOIDS 24VAC; FACTORY WIRED
4. AIR SUPPLY REQUIRED: 2 CFM @ 70 PSIG (MIN.).
5. MEDIA REQUIREMENT PER TANK:

A. 1/2"x3/4" CRUSHED ROCK:	2.5 CU. FT. ,
B. 1.45mm GARNET:	2.5 CU. FT. ,
C. 0.35mm GARNET:	7.5 CU. FT. ,
D. 0.75mm ANTHRACITE:	7.5 CU. FT. ,

6. WEIGHTS: (APPROX.)

EQUIPMENT:	680 LBS (LESS MEDIA)
MEDIA:	2,116 LBS
OPERATION:	3,650 LBS

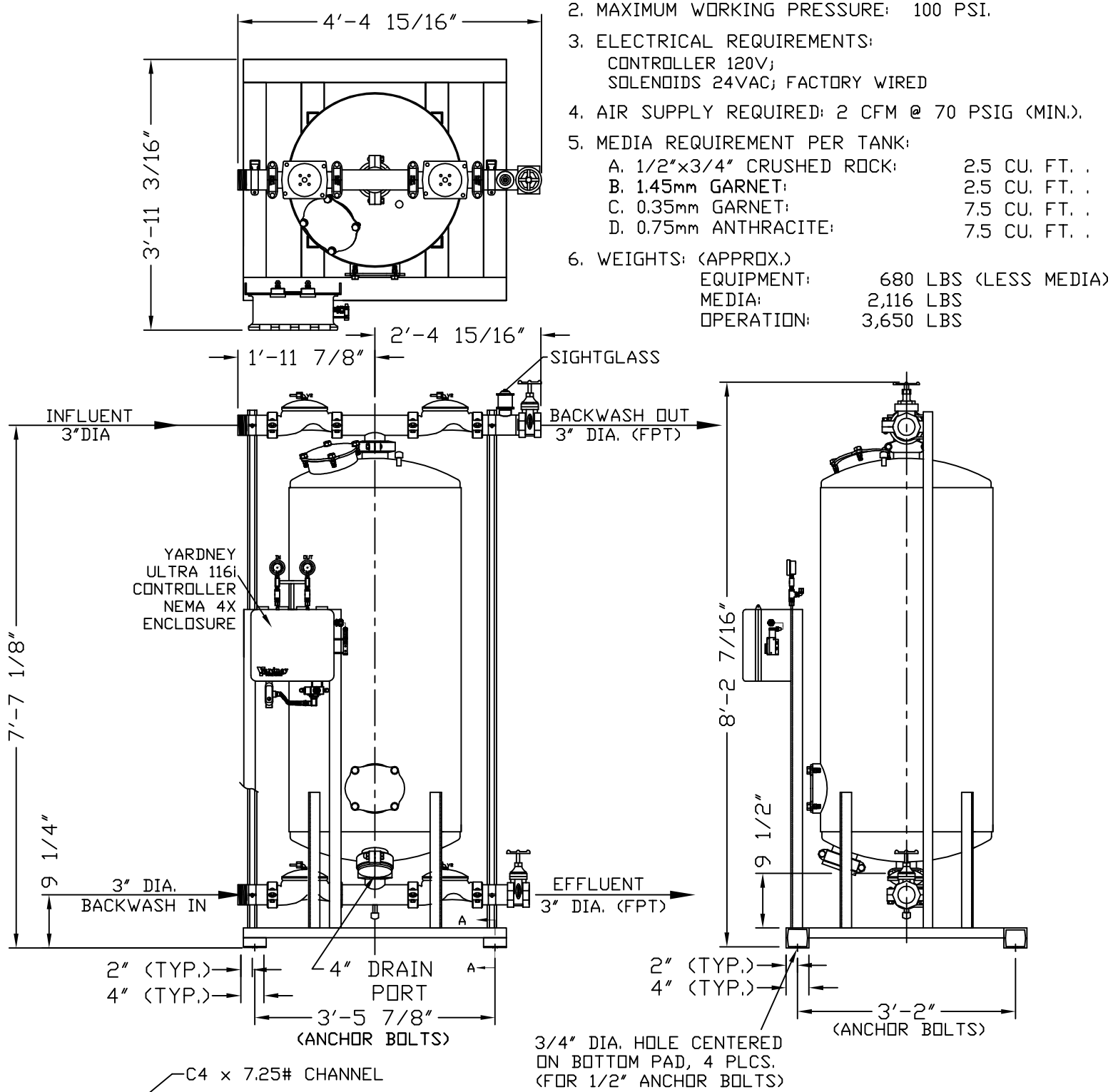

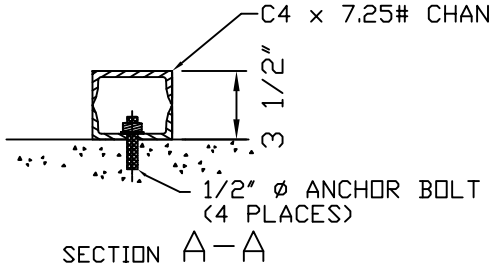

SECTION A-A

THIS DRAWING, INCLUDING THE INFORMATION IT CONTAINS, IS CONFIDENTIAL, PROPRIETARY, AND IS THE PROPERTY OF YARDNEY WATER MANAGEMENT, INC. IT IS SUBMITTED ONLY IN CONNECTION WITH THE TRANSACTION TO WHICH IT PERTAINS AND MUST NOT BE USED IN ANY OTHER MANNER DETRIMENTAL TO THE INTERESTS OF YARDNEY WATER MANAGEMENT. THE DRAWING IS NOT TO BE COPIED AND MUST BE RETURNED UPON REQUEST. COPYRIGHT YARDNEY WATER MANAGEMENT SYSTEMS, 1994.

NO.	REVISION	BY	DATE
F	ADDED 4" DRAIN PORT	DTC	11-09
E	ADDED SIGHTGLASS	DTC	10-07
D	AIR SUPPLY NOTE CHANGE	DTC	4-07
C	CORRECTED GPM FLOW RATES	DTC	10-05
B	STANDARDIZED NOTES	DTC	9-05

CUSTOMER:
USED ON:
DRAWN BY: JMW
DATE: 6/26/02

Yardney WATER MANAGEMENT SYSTEMS RIVERSIDE, CALIFORNIA

MM 3060-1A
FILTER SYSTEM

DRAWING NO: 9500306001 REV: F
LOCATION: \SYSTEM\MM\ SHEET 1 OF 1

Company name:
Created by:
Phone:

Date: 9/28/2017

Position	Count	Description
	1	**MS 402**

Product photo could vary from the actual product

Product No.: 79362005
The motor is a 3-phase motor of the canned type with a sand shield, liquid-lubricated bearings and pressure-equalizing diaphragm.

Liquid:
Max liquid temperature at 0.15 m/sec: 104 °F

Technical:

Shaft seal for motor:	LIPSEAL
Approvals on nameplate:	CE,EAC,CSACOMP
Motor version:	T40

Materials:

Motor:	Stainless steel DIN W.-Nr. 1.4301 AISI 304

Installation:

Maximum ambient pressure:	218 psi
Motor diameter:	4 inch

Electrical data:

Motor type:	MS402
Rated power - P2:	1.5 HP
Main frequency:	60 Hz
Rated voltage:	3 x 460 V
Voltage tolerance:	+10/-10 %
Service factor:	1.30
Rated current:	3.65 A
Maximum current consumption:	3.65 A
Starting current:	510 %
Cos phi - power factor:	0.72
Rated speed:	3450 rpm
Locked-rotor torque:	240 %
Moment of inertia:	0.015 lb ft²
Start. method:	direct-on-line
Enclosure class (IEC 34-5):	IP68
Insulation class (IEC 85):	B
Built-in temperature transmitter:	No
Winding resistance:	12.5 ohm

Company name:
Created by:
Phone:

Date: 9/28/2017

Description	Value
General information:	
Product name:	MS 402
Product No.:	79362005
EAN:	5700390659561
Technical:	
Shaft seal for motor:	LIPSEAL
Approvals on nameplate:	CE,EAC,CSACOMP
Model:	B
Motor version:	T40
Materials:	
Motor:	Stainless steel
	DIN W.-Nr. 1.4301
	AISI 304
Installation:	
Maximum ambient pressure:	218 psi
Motor diameter:	4 inch
Staybolt:	5/16-24 UNF
Liquid:	
Max liquid temperature at 0.15 m/sec:	104 °F
Electrical data:	
Motor type:	MS402
Rated power - P2:	1.5 HP
KVA code:	M
Main frequency:	60 Hz
Rated voltage:	3 x 460 V
Voltage tolerance:	+10/-10 %
Service factor:	1.30
Rated current:	3.65 A
Maximum current consumption:	3.65 A
Starting current:	510 %
Cos phi - power factor:	0.72
Rated speed:	3450 rpm
Locked-rotor torque:	240 %
Moment of inertia:	0.015 lb ft²
Axial load max:	772 lb
Start. method:	direct-on-line
Enclosure class (IEC 34-5):	IP68
Insulation class (IEC 85):	B
Motor protection:	NONE
Thermal protec:	external
Built-in temperature transmitter:	No
Winding resistance	12.5 ohm

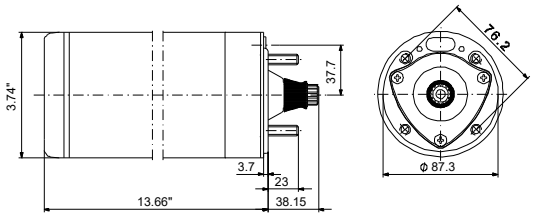

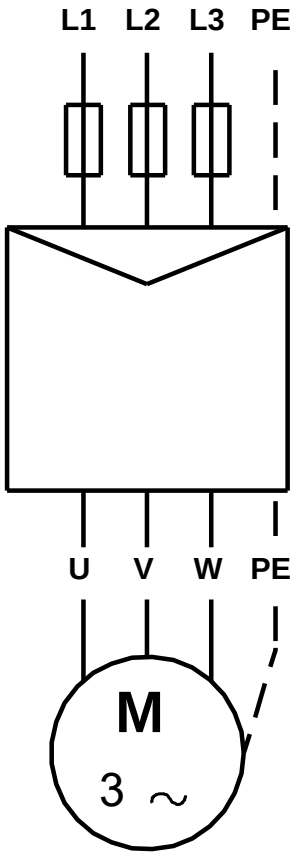

Company name:
Created by:
Phone:

Date: 9/28/2017

79362005 MS 402 60 Hz

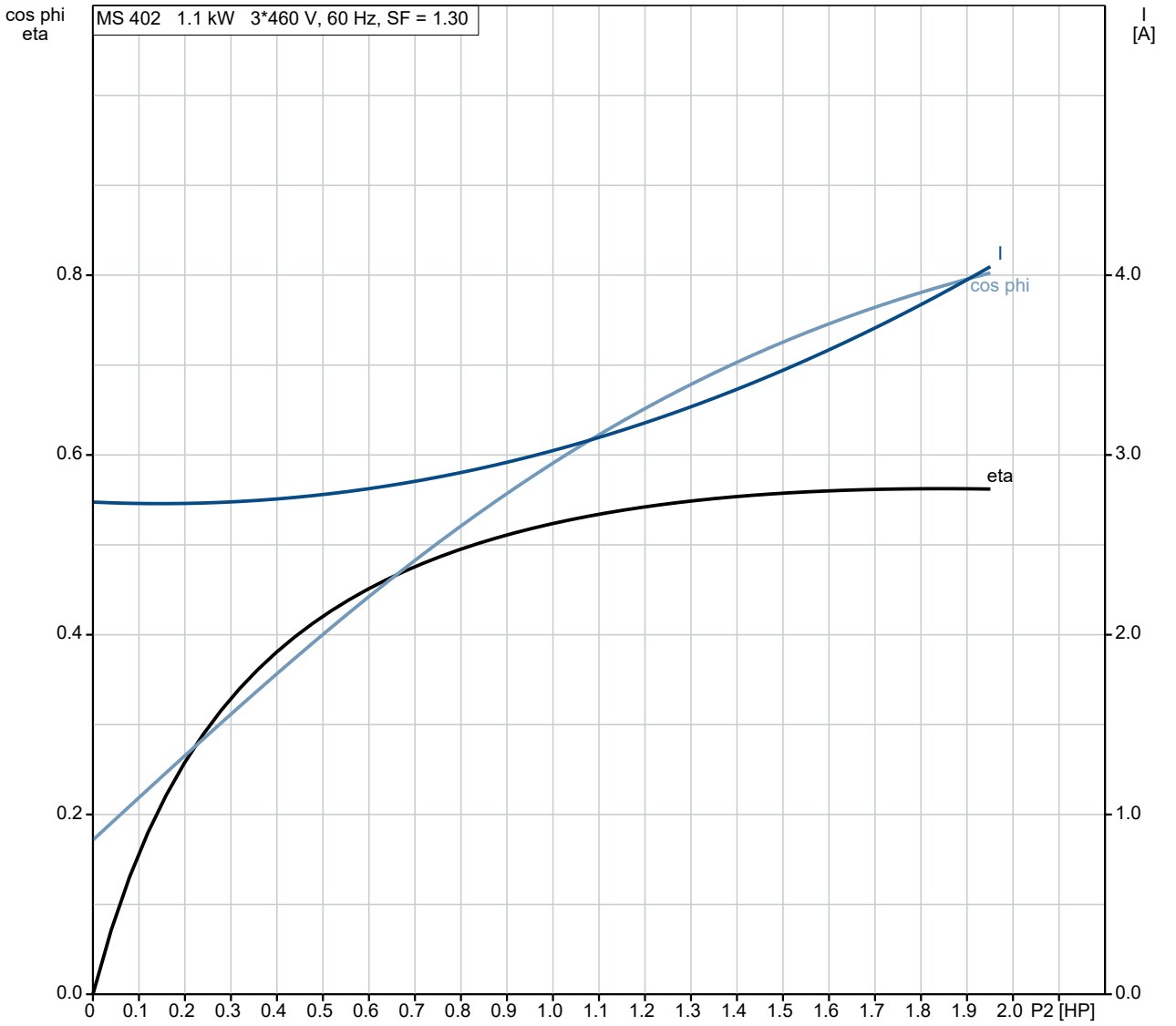

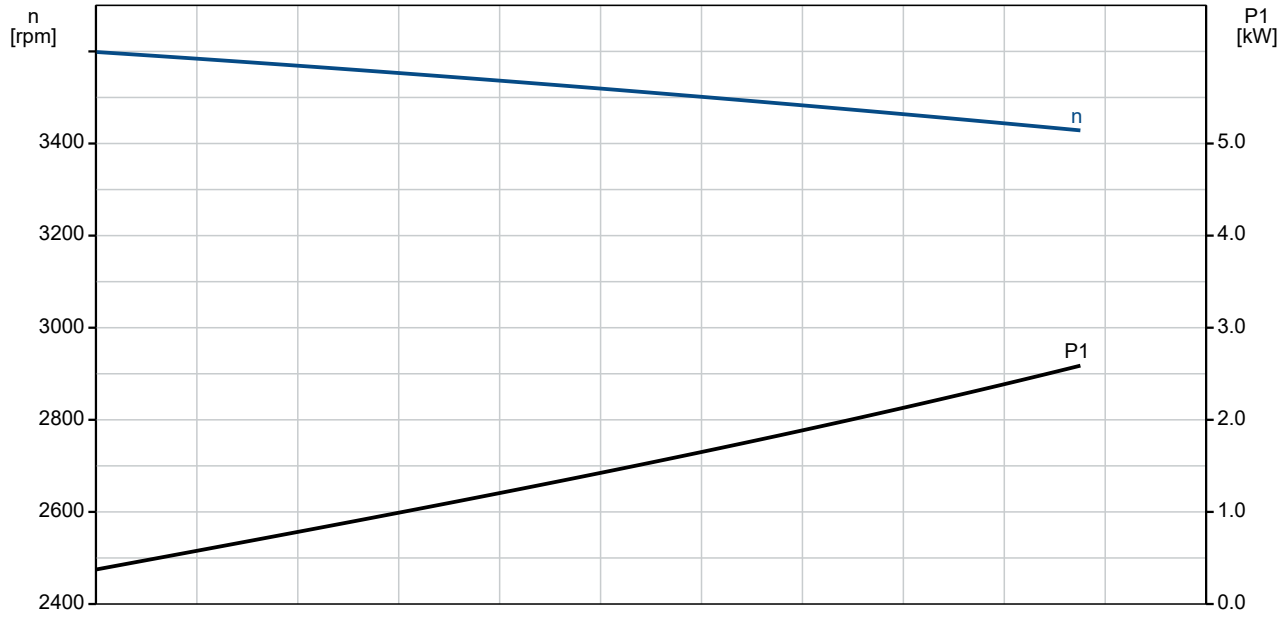

Company name:
Created by:
Phone:

Date: 9/28/2017

79362005 MS 402 60 Hz

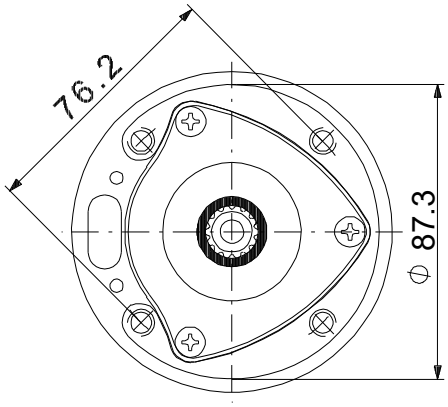

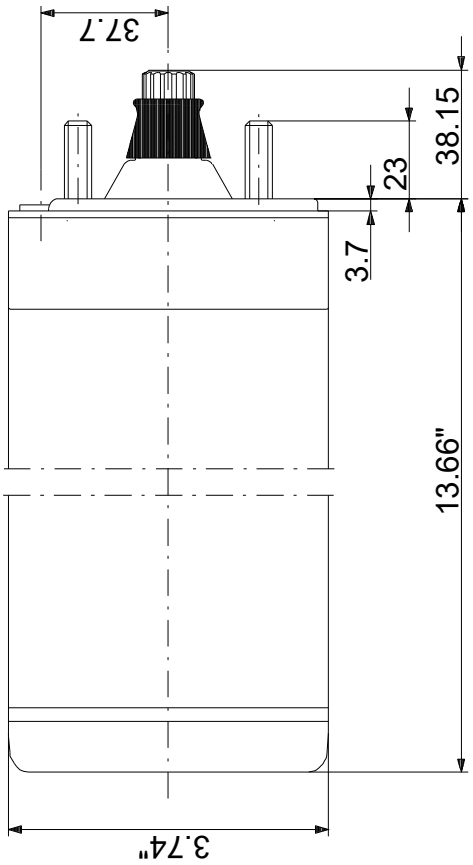

Note! All units are in [mm] unless otherwise stated.
Disclaimer: This simplified dimensional drawing does not show all details.

GRUNDFOS

Company name:
Created by:
Phone:

Date: 9/28/2017

79362005 MS 402 60 Hz

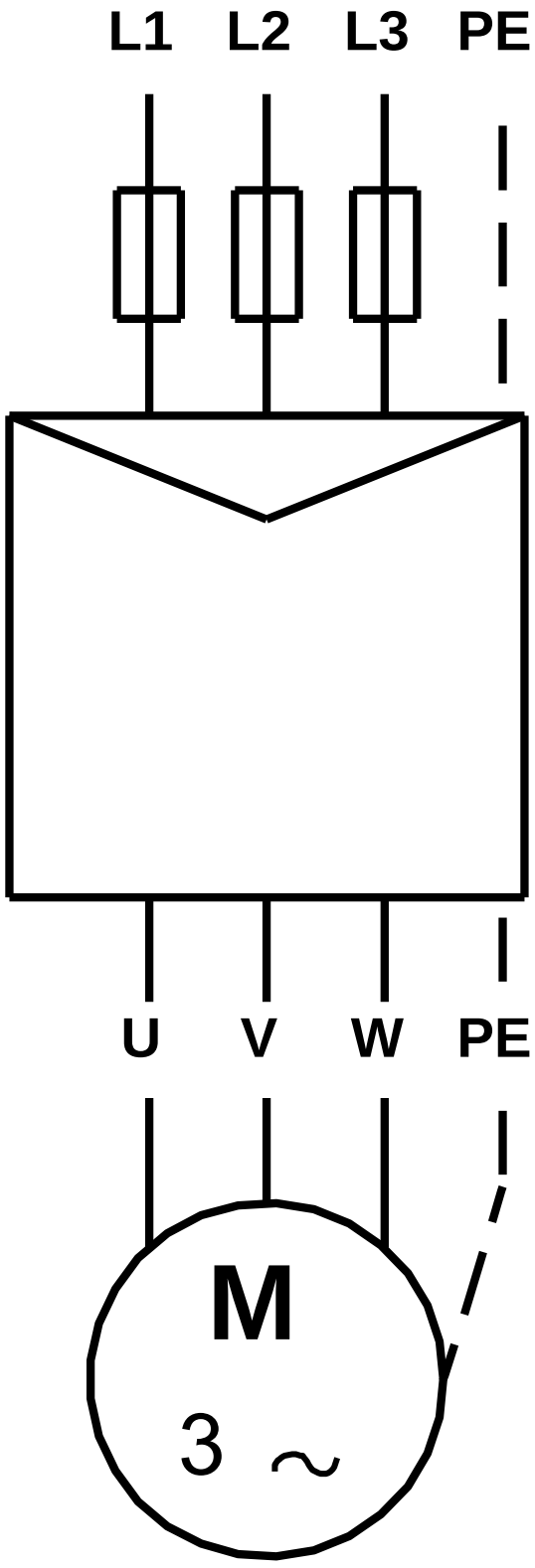

All units are [mm] unless otherwise presented.

Company name:
Created by:
Phone:

Date: 9/28/2017

Position	Count	Description
	1	**10S15-21**

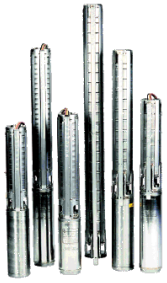

Product photo could vary from the actual product

Product No.: 91536215
Multi-stage submersible pump for raw water supply, groundwater lowering and pressure boosting. The pump is suitable for pumping clean, thin, non-agressive liquids without solid particles or fibers.

The pump is made entirely of Stainless steel DIN W.-Nr. DIN W.-Nr. 1.4301 and suitable for horizontal and vertical installation.
The pump is fitted with a built-in non-return valve.

The motor is a 3-phase motor of the canned type with a sand shield, liquid-lubricated bearings and pressure-equalizing diaphragm.

Liquid:

Pumped liquid:	Water
Maximum liquid temperature:	104 °F
Max liquid temperature at 0.15 m/sec:	104 °F
Liquid temperature during operation:	68 °F
Density:	62.29 lb/ft³

Technical:

Speed for pump data:	3450 rpm
Shaft seal for motor:	LIPSEAL
Approvals on nameplate:	CE,EAC,CSACOMP
Curve tolerance:	ISO9906:2012 3B

Materials:

Pump:	Stainless steel DIN W.-Nr. 1.4301 AISI 304
Impeller:	Stainless steel DIN W.-Nr. 1.4301 AISI 304
Motor:	Stainless steel DIN W.-Nr. 1.4301 AISI 304

Installation:

Pump outlet:	1 1/4"NPT
Motor diameter:	4 inch

Electrical data:

Motor type:	MS402
Rated power - P2:	1.5 HP
Power (P2) required by pump:	2.105 HP

GRUNDFOS

Company name:
Created by:
Phone:

Date: 9/28/2017

Position	Count	Description	
		Main frequency:	60 Hz
		Rated voltage:	3 x 460 V
		Service factor:	1,3
		Rated current:	3.65 A
		Cos phi - power factor:	0,72
		Rated speed:	3450 rpm
		Start. method:	direct-on-line
		Enclosure class (IEC 34-5):	IP68
		Insulation class (IEC 85):	B
		Built-in temperature transmitter:	No
		Others:	
		Net weight:	35.9 lb
		Gross weight:	39.9 lb

Company name:
Created by:
Phone:

Date: 9/28/2017

Description	Value
General information:	
Product name:	10S15-21
Product No.:	91536215
EAN:	5700394510738
Technical:	
Speed for pump data:	3450 rpm
Shaft seal for motor:	LIPSEAL
Approvals on nameplate:	CE,EAC,CSACOMP
Curve tolerance:	ISO9906:2012 3B
Pump Number:	9010021
Stages:	21
Model:	A
Valve:	pump with built-in non-return valve
Materials:	
Pump:	Stainless steel
	DIN W.-Nr. 1.4301
	AISI 304
Impeller:	Stainless steel
	DIN W.-Nr. 1.4301
	AISI 304
Motor:	Stainless steel
	DIN W.-Nr. 1.4301
	AISI 304
Installation:	
Pump outlet:	1 1/4"NPT
Motor diameter:	4 inch
Liquid:	
Pumped liquid:	Water
Maximum liquid temperature:	104 °F
Max liquid temperature at 0.15 m/sec:	104 °F
Liquid temperature during operation:	68 °F
Density:	62.29 lb/ft³
Electrical data:	
Motor type:	MS402
Applic. motor:	NEMA
Rated power - P2:	1.5 HP
Power (P2) required by pump:	2.105 HP
KVA code:	M
Main frequency:	60 Hz
Rated voltage:	3 x 460 V
Service factor:	1,3
Rated current:	3.65 A
Cos phi - power factor:	0,72
Rated speed:	3450 rpm
Start. method:	direct-on-line
Enclosure class (IEC 34-5):	IP68
Insulation class (IEC 85):	B
Motor protection:	NONE
Thermal protec:	external
Built-in temperature transmitter:	No
Motor Number:	79362005
Others:	

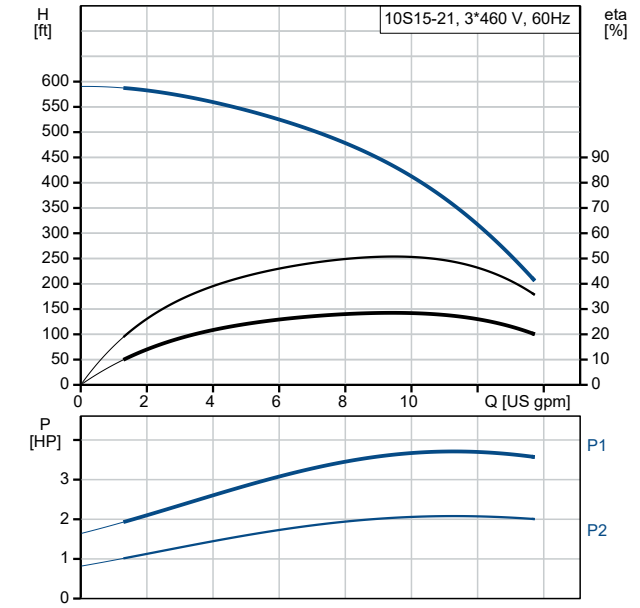

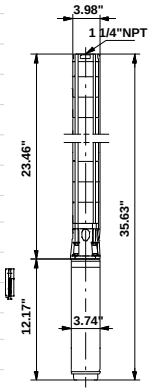

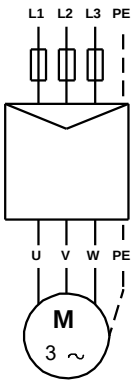

Company name:
Created by:
Phone:

Date: 9/28/2017

Description	Value
Net weight:	35.9 lb
Gross weight:	39.9 lb
Sales region:	Namreg

Company name:
Created by:
Phone:

Date: 9/28/2017

91536215 10S15-21 60 Hz

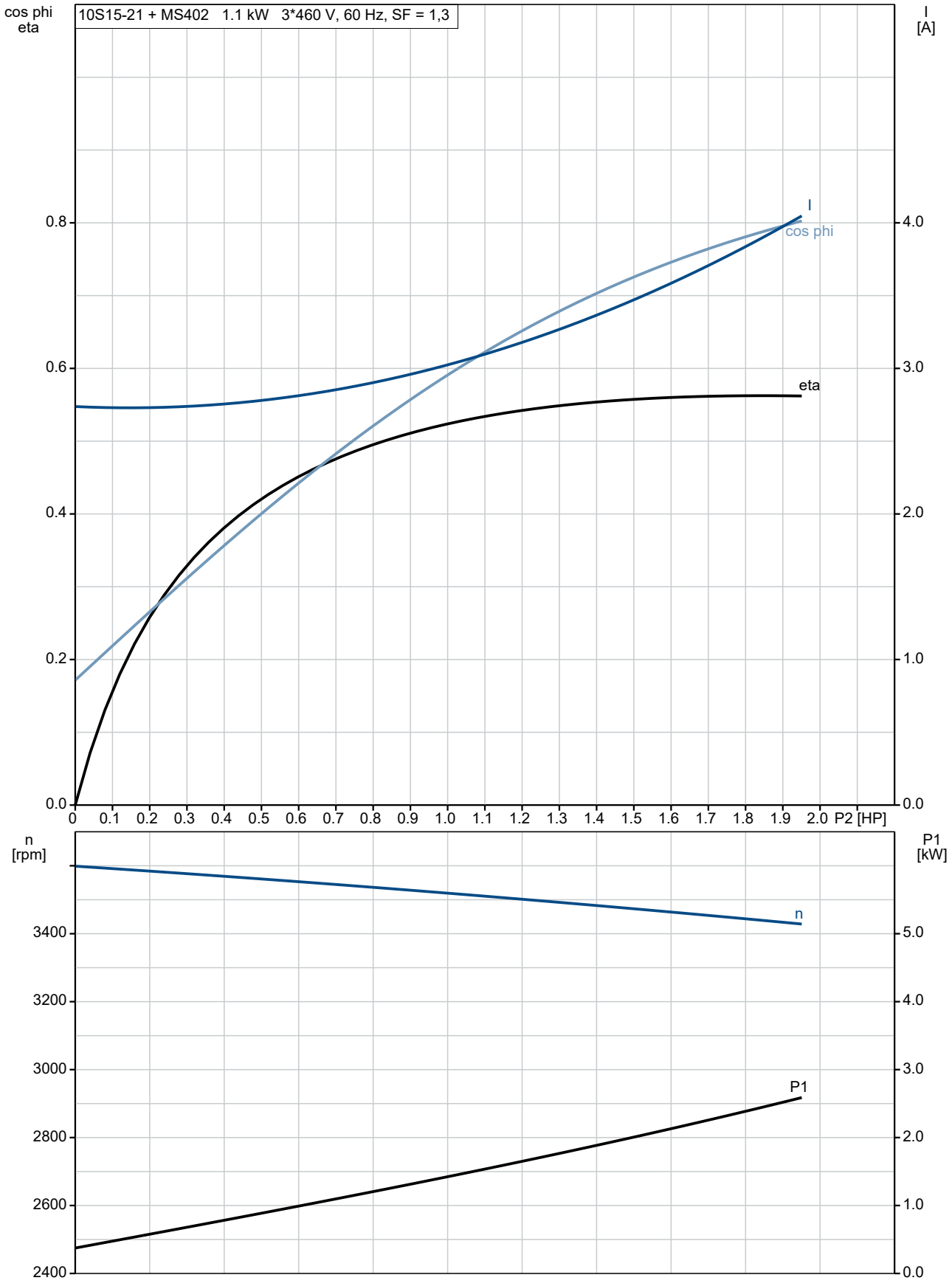

GRUNDFOS

Company name:
Created by:
Phone:

Date: 9/28/2017

91536215 10S15-21 60 Hz

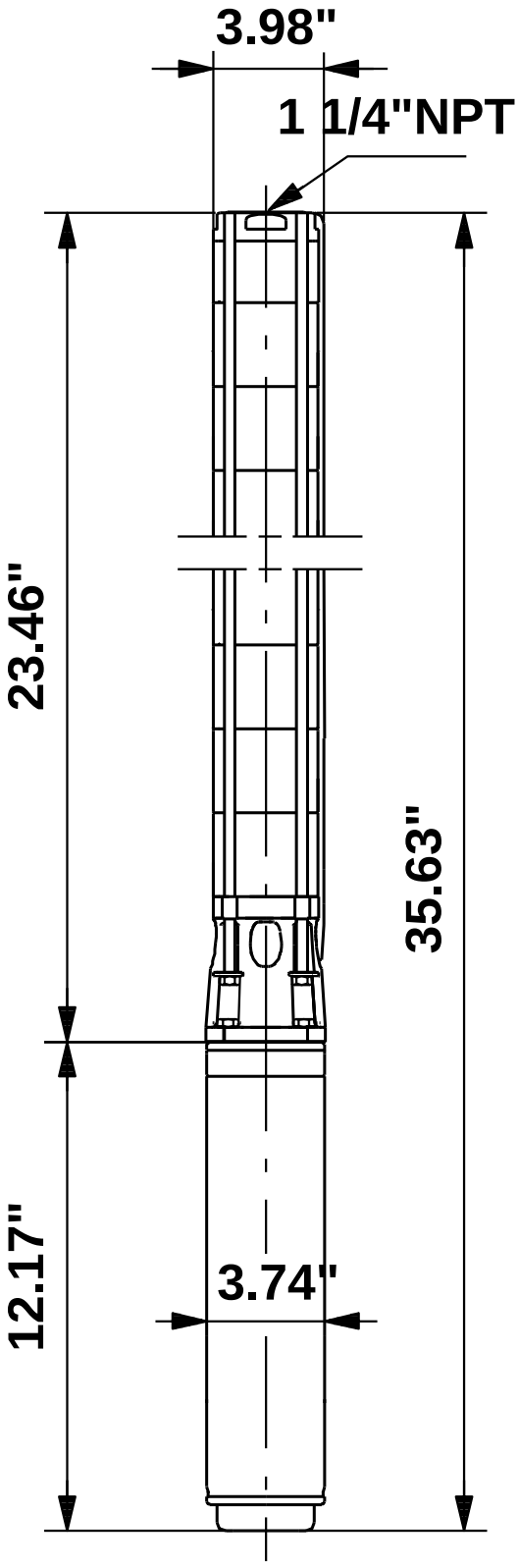

Note! All units are in [mm] unless otherwise stated.
Disclaimer: This simplified dimensional drawing does not show all details.

GRUNDFOS

Company name:
Created by:
Phone:

Date: 9/28/2017

91536215 10S15-21 60 Hz

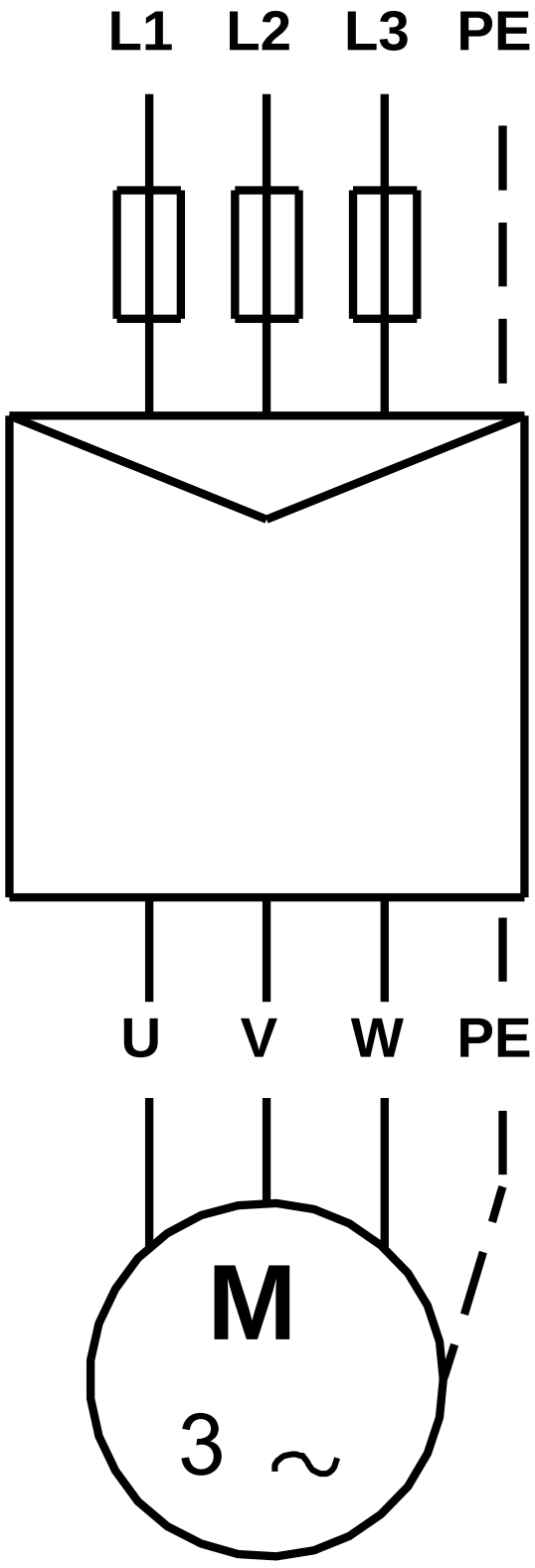

All units are [mm] unless otherwise presented.

quality . service
innovation . integrity

180, 190 Series

ZOELLER GREEN ®

"The color green is a registered trademark of Zoeller Pump Co."

Features

The Flow-Mate series of submersible pumps is designed for use in residential or light commercial dewatering applications and can be used to transfer groundwater or effluent. These durable cast iron pumps include a powder coated epoxy finish to prevent corrosion, and are designed to provide great heat dissipation from the motor, ensuring a long service life. As with every Zoeller® pump, each one is 100% pressure-tested, submerged and run to ensure quality and reliability for years of trouble-free performance!

- Automatic models include a float-operated, 2-pole mechanical switch, a stainless steel float guard and switch arm, and a buoyant polystyrene float.
- Nonautomatic units are ideal for use in septic systems, low pressure pipe (LPP), and enhanced flow STEP systems.
- For nonautomatic pumps, variable level control systems and containers of various sizes are available for longer cycles.
- Double seal models are available to prevent leaks and damage to seals or bearings during dry run conditions as well as improve bearing lubrication.
- Includes a stainless steel handle for easy installation and removal.
- All models are hermetically sealed to be watertight, dust-tight, and completely submersible.

Reserve Powered Design: For unusual conditions, a reserve safety factor is engineered into the design of every pump.

Specifications

Motor Characteristics

Motor	1 - 2 HP
Voltage	200 - 575 V
Phase	1 or 3 Ph
Hertz	60 Hz
RPM	3450 RPM
Type	Permanent split capacitor or 3 Ph
Insulation	Class B/185 & 4185, Class F/186-191 & 4186-4189
Amps	3.3 - 20.5 Amps

Pump Characteristics

Operation	Automatic or nonautomatic
Auto On/ Off Points	15-3/4" (400 mm) / 5-1/4" (133 mm)
Discharge Size	1-1/2" NPT (optional 2" or 3" flange)
Solids Handling	180/4180: 3/4" (19 mm), 191: 5/8" (15 mm) spherical solids
Cord Length	20' (6 m) standard
Cord Type	UL listed, 3-wire neoprene cord and plug (1 Ph) or 4-wire cord with no plug (3 Ph)
Max Head	137' (42 m)
Max Flow Rate	145 GPM (549 LPM)
Max Operating Temp	130 °F (54 °C), (model WD189 120 °F [49 °C])
Cooling	Oil filled
Motor Protection	Auto reset thermal overload (1 Ph)

Materials Characteristics

Cap	Cast iron
Motor Housing	Cast iron
Pump Housing	Cast iron
Base	Cast iron
Upper Bearing	Ball bearing
Lower Bearing	Ball bearing
Mechanical Seals	Carbon and ceramic
Impeller Type	Non-clogging vortex
Impeller	Bronze
Hardware	Stainless steel
Motor Shaft	1117 carbon steel or 416 stainless steel*
Gasket	Neoprene

60 Hz

ZOELLER® PUMP COMPANY

Zoeller Family of Water Solutions™

FM0659_Ea

180, 190 Series

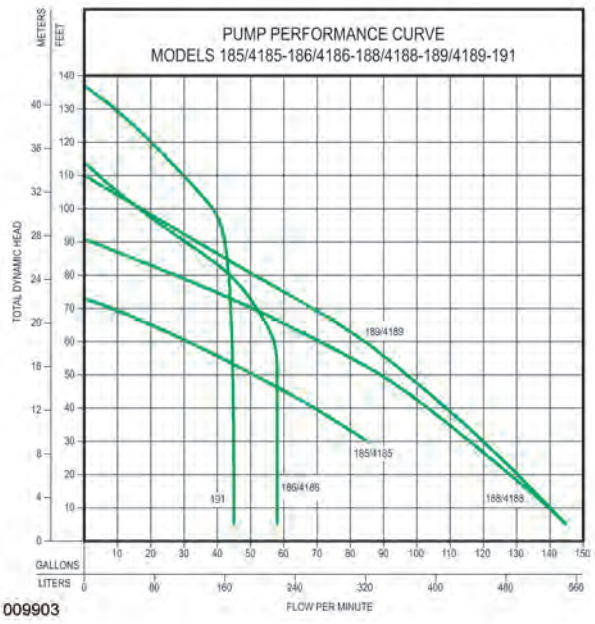

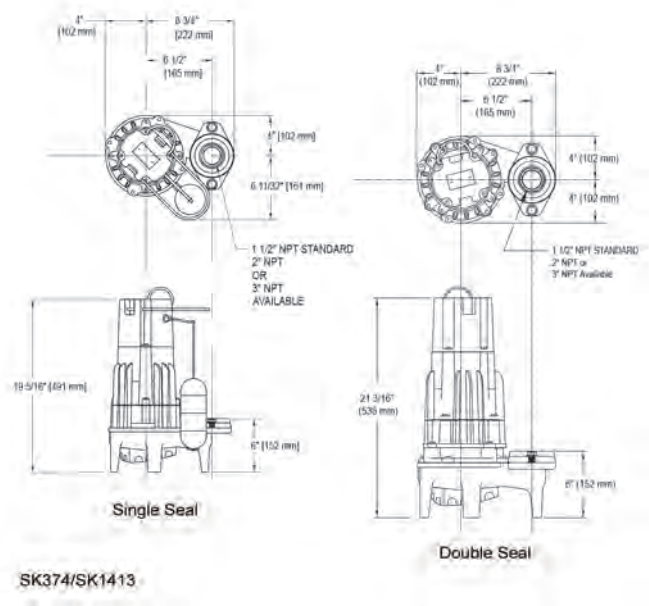

Model

Model Number	Seal	Mode	Volts	Phase	Amps	HP	Hz	Lbs	Kg
D185 / H185	Single	Auto	230 / 200	1	9.8 / 11.5	1	60	85 / 86	38 / 39
E185/E4185	Single / Dbl	Non	230	1	9.8	1	60	85 / 92	38 / 41
I185/I4185	Single / Dbl	Non	200	1	11.5	1	60	85 / 92	38 / 41
F185/F4185	Single / Dbl	Non	230	3	7.4	1	60	85 / 92	38 / 41
J185/J4185	Single / Dbl	Non	200	3	7.5	1	60	85 / 92	38 / 41
G185/G4185	Single / Dbl	Non	460	3	3.7	1	60	85 / 92	38 / 41
BA185	Single	Non	575	3	3.3	1	60	85	38
BE185	Single	Auto	230	1	9.5	1	60	87	39
D186 / H186	Single	Auto	230 / 200	1	13.7 / 17.2	1-1/2	60	91	41
E186/E4186	Single / Dbl	Non	230	1	13.7	1-1/2	60	90 / 97	40 / 43
I186/I4186	Single / Dbl	Non	200	1	17.2	1-1/2	60	90 / 97	40 / 43
F186/F4186	Single / Dbl	Non	230	3	9.2	1-1/2	60	90 / 97	40 / 43
J186/J4186	Single / Dbl	Non	200	3	10.3	1-1/2	60	90 / 97	40 / 43
G186/G4186	Single / Dbl	Non	460	3	4.6	1-1/2	60	90 / 97	40 / 43
BA186/BA4186	Single/Double	Non	575	3	3.6	1-1/2	60	90/97	40/43
BE186	Single	Auto	230	1	13.7	1 1/2	60	92	42
D188 / H188	Single	Auto	230 / 200	1	14.0 / 16.8	1-1/2	60	91	41
E188/E4188	Single / Dbl	Non	230	1	14.0	1-1/2	60	90 / 97	40 / 43
I188/I4188	Single / Dbl	Non	200	1	16.8	1-1/2	60	90 / 97	40 / 43
F188/F4188	Single / Dbl	Non	230	3	8.9	1-1/2	60	90 / 97	40 / 43
J188/J4188	Single / Dbl	Non	200	3	10.3	1-1/2	60	90	40 / 43
G188/G4188	Single / Dbl	Non	460	3	4.6	1-1/2	60	95 / 97	43 / 43
BA188	Single	Non	575	3	3.5	1-1/2	60	90	40
BE188	Single	Auto	230	1	14.0	1 1/2	60	92	42
D189 / H189	Single	Auto	230 / 200	1	17.1 / 20.5	2	60	91	41
E189/E4189	Single / Dbl	Non	230	1	17.1	2	60	90 / 97	40 / 43
I189/I4189	Single / Dbl	Non	200	1	20.5	2	60	90 / 97	40 / 43
F189/F4189	Single / Dbl	Non	230	3	11.2	2	60	90 / 97	40 / 43
J189/J4189	Single / Dbl	Non	200	3	13.2	2	60	90 / 97	40 / 43
G189/G4189	Single / Dbl	Non	460	3	6.0	2	60	90 / 97	40 / 43
BA189/BA4189	Single/Double	Non	575	3	5.8	2	60	90/97	40/43
WD189/4189	Single / Dbl	Auto	230	1	17.1	2	60	93 / 100	42 / 45

Your Peace of Mind is Our Top Priority®
3649 Cane Run Rd | Louisville, KY 40211 USA
+1 502-778-2731 | 1-800-928-7867 | Fax: +1 502-774-3624
www.zoeller.com

Product information presented here reflects conditions at time of publication. Consult factory regarding discrepancies or inconsistencies. Copyright Zoeller Company. All rights reserved.

Company name:
Created by:
Phone:

Date: 5/1/2017

Position	Count	Description
	1	**ML112CA**

Product photo could vary from the actual product

Product No.: 85904389

The motor is a 3-phase AC standard motor.
Grundfos Blueflux(R) technology represents the best from Grundfos within energy efficient motors and variable frequency drives (MG motors, MGE motors and CUE drives). Grundfos Blueflux(R) solutions either meet or exceed legislative requirements such as the EuP IE3 grade.

Technical:

Approvals on motor nameplate:	CE,CURUS,CC122B,ECURUS,IE3,EAC
Cable gland:	2 x PG 21
Drain holes:	Yes (closed)

Installation:

Range of ambient temperature:	-22 .. 140 °F
Flange size for motor:	182TC

Electrical data:

Motor type:	112CA
IE Efficiency class:	NEMA Premium / IE3 60Hz
Rated power - P2:	5.5 HP
P2:	5.5 HP
Main frequency:	60 Hz
Rated voltage:	3 x 208-230YY/460Y V
Service factor:	1,15
Rated current:	14,1-13,1/7,29 A
Maximum current consumption:	15,5-14,6/ A
Starting current:	1000-1470 %
Cos phi - power factor:	0,89-0,86
Rated speed:	3525-3540 rpm
Rated full-load torque:	7.966 ft lb
Locked-rotor torque:	330-530 %
Breakdown torque:	420-670 %
Moment of inertia:	0.178 lb ft²
IE efficiency:	IE3 88,5%
Motor efficiency at full load:	88.5 %
Motor efficiency at 3/4 load:	88.6 %
Motor efficiency at 1/2 load:	85.2 %
Number of poles:	2
Enclosure class (IEC 34-5):	55 Dust/Jetting
Insulation class (IEC 85):	F

Others:

Label:	Grundfos Blueflux
Net weight:	88.2 lb
Color/Type:	NCS 9000 gloss 40+-10 /E-coat

Company name:
Created by:
Phone:

Date: 5/1/2017

Description	Value
General information:	
Product name:	ML112CA
Product No.:	85904389
EAN:	5710629537195
Price:	On request
Technical:	
Shaft diameter:	1.14 in
Shaft end length:	2.76 in
Approvals on motor nameplate:	CE,CURUS,CC122B,ECURUS,IE3,EAC
Model:	H3
Cooling:	TEFC
Cable gland:	2 x PG 21
Drain holes:	Yes (closed)
Installation:	
Range of ambient temperature:	-22 .. 140 °F
Flange size for motor:	182TC
Electrical data:	
Motor type:	112CA
IE Efficiency class:	NEMA Premium / IE3 60Hz
Rated power - P2:	5.5 HP
P2:	5.5 HP
Main frequency:	60 Hz
Rated voltage:	3 x 208-230YY/460Y V
Service factor:	1,15
Rated current:	14,1-13,1/7,29 A
Maximum current consumption:	15,5-14,6/ A
Starting current:	1000-1470 %
Load current:	16,2-15,0/8,40 A
Cos phi - power factor:	0,89-0,86
Rated speed:	3525-3540 rpm
Rated full-load torque:	7.966 ft lb
Locked-rotor torque:	330-530 %
Breakdown torque:	420-670 %
Moment of inertia:	0.178 lb ft²
IE efficiency:	IE3 88,5%
Motor efficiency at full load:	88.5 %
Motor efficiency at 3/4 load:	88.6 %
Motor efficiency at 1/2 load:	85.2 %
Number of poles:	2
Enclosure class (IEC 34-5):	55 Dust/Jetting
Insulation class (IEC 85):	F
Motor protection:	PTC
Tropic protec:	No
Thermal protec:	external
R1:	0,924 ohm
R2:	0,924 ohm
R3:	0,924 ohm
Winding 1:	PHASE 1
Winding 2:	PHASE 2
Winding 3:	PHASE 3
Mounting design per IEC 34-7:	NEMA type C
Others:	
Label:	Grundfos Blueflux
Net weight:	88.2 lb

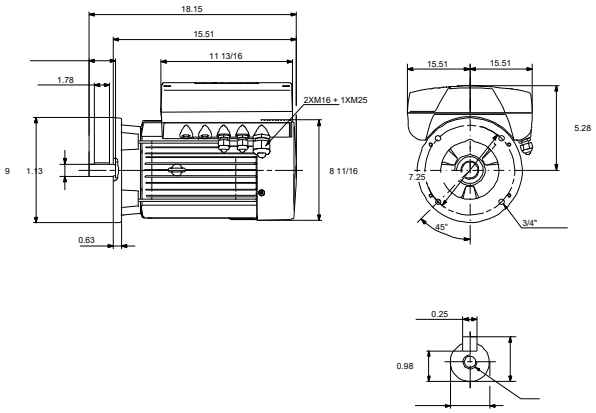

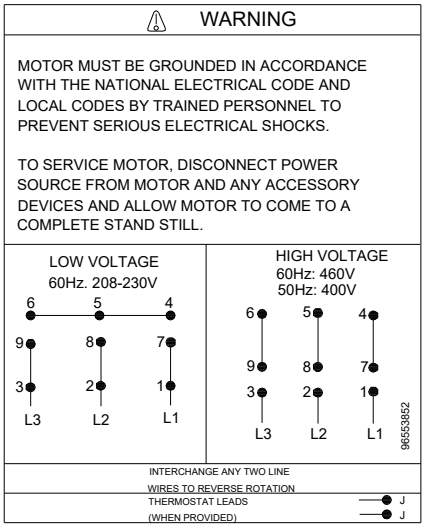

GRUNDFOS

Company name:
Created by:
Phone:

Date: 5/1/2017

Description	Value
Color/Type:	NCS 9000 gloss 40+-10 /E-coat

Company name:
Created by:
Phone:

Date: 5/1/2017

85904389 ML112CA 60 Hz

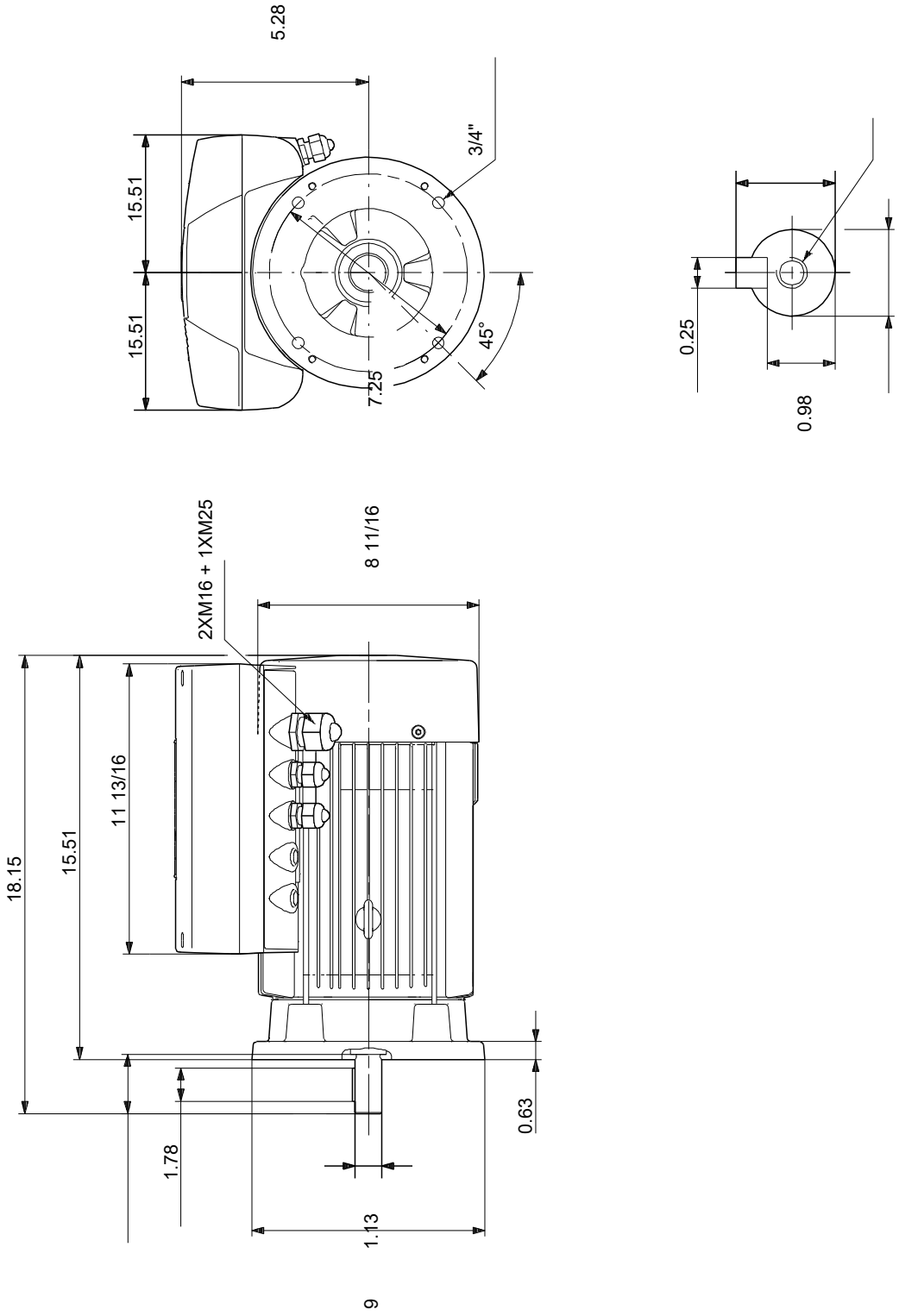

Note! All units are in [mm] unless otherwise stated.
Disclaimer: This simplified dimensional drawing does not show all details.

Company name:
Created by:
Phone:

Date: 5/1/2017

85904389 ML112CA 60 Hz

⚠ WARNING

MOTOR MUST BE GROUNDED IN ACCORDANCE WITH THE NATIONAL ELECTRICAL CODE AND LOCAL CODES BY TRAINED PERSONNEL TO PREVENT SERIOUS ELECTRICAL SHOCKS.

TO SERVICE MOTOR, DISCONNECT POWER SOURCE FROM MOTOR AND ANY ACCESSORY DEVICES AND ALLOW MOTOR TO COME TO A COMPLETE STAND STILL.

LOW VOLTAGE
60Hz. 208-230V

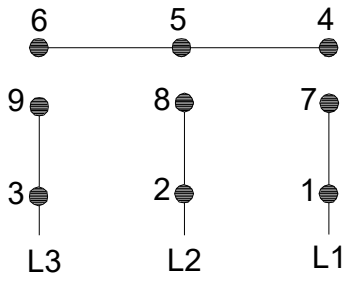

HIGH VOLTAGE
60Hz: 460V
50Hz: 400V

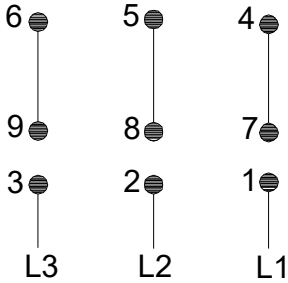

96553852

INTERCHANGE ANY TWO LINE
WIRES TO REVERSE ROTATION

THERMOSTAT LEADS — J
(WHEN PROVIDED) — J

All units are [mm] unless otherwise presented.

GRUNDFOS

Company name:
Created by:
Phone:

Date: 5/1/2017

Position	Count	Description
	1	**CR 15-2 A-B-A-E-HQQE**

Product photo could vary from the actual product

Product No.: 96523608
Vertical, non-self-priming, multistage, in-line, centrifugal pump for installation in pipe systems and mounting on a foundation.

The pump has the following characteristics:
- Impellers and intermediate chambers are made of Stainless steel, DIN W.-Nr. 1.4301.
- Pump head and base are made of Cast iron.
- The shaft seal has assembly length according to EN 12756.
- Power transmission is via cast iron split coupling.
- Pipework connection is via OVAL flanges.

The motor is a 3-phase AC motor.

Liquid:

Pumped liquid:	Water
Liquid temperature range:	-4 .. 248 °F
Q_OpFluidTemp:	68 °F
Density:	62.29 lb/ft³
Kinematic viscosity:	1 cSt

Technical:

Speed for pump data:	3461 rpm
Actual calculated flow:	120 US gpm
Resulting head of the pump:	76.35 ft
Primary shaft seal:	HQQE
Approvals on nameplate:	ANSI/NSF61
Curve tolerance:	ISO9906:2012 3B

Materials:

Pump housing:	Cast iron EN-JL1030 ASTM A48-30 B
Impeller:	Stainless steel DIN W.-Nr. 1.4301 AISI 304

Installation:

Maximum ambient temperature:	140 °F
Max pressure at stated temperature:	145 psi / 250 °F 145 psi / -4 °F

Position	Count	Description	
		Flange standard:	OVAL
		Pipe connection:	2" NPT
		Flange size for motor:	182TC
		Electrical data:	
		Motor type:	112CA
		Rated power - P2:	5.5 HP
		Power (P2) required by pump:	5 HP
		Main frequency:	60 Hz
		Rated voltage:	3 x 208-230YY/460Y V
		Service factor:	1,15
		Rated current:	14,1-13,1/7,29 A
		Starting current:	1000-1470 %
		Cos phi - power factor:	0,89-0,86
		Rated speed:	3525-3540 rpm
		Motor efficiency at 3/4 load:	88.6 %
		Motor efficiency at 1/2 load:	85.2 %
		Number of poles:	2
		Enclosure class (IEC 34-5):	55 Dust/Jetting
		Insulation class (IEC 85):	F
		Others:	
		Net weight:	172 lb
		Gross weight:	190 lb
		Shipping volume:	4.94 ft³

Company name:
Created by:
Phone:

Date: 5/1/2017

96523608 CR 15-2 60 Hz

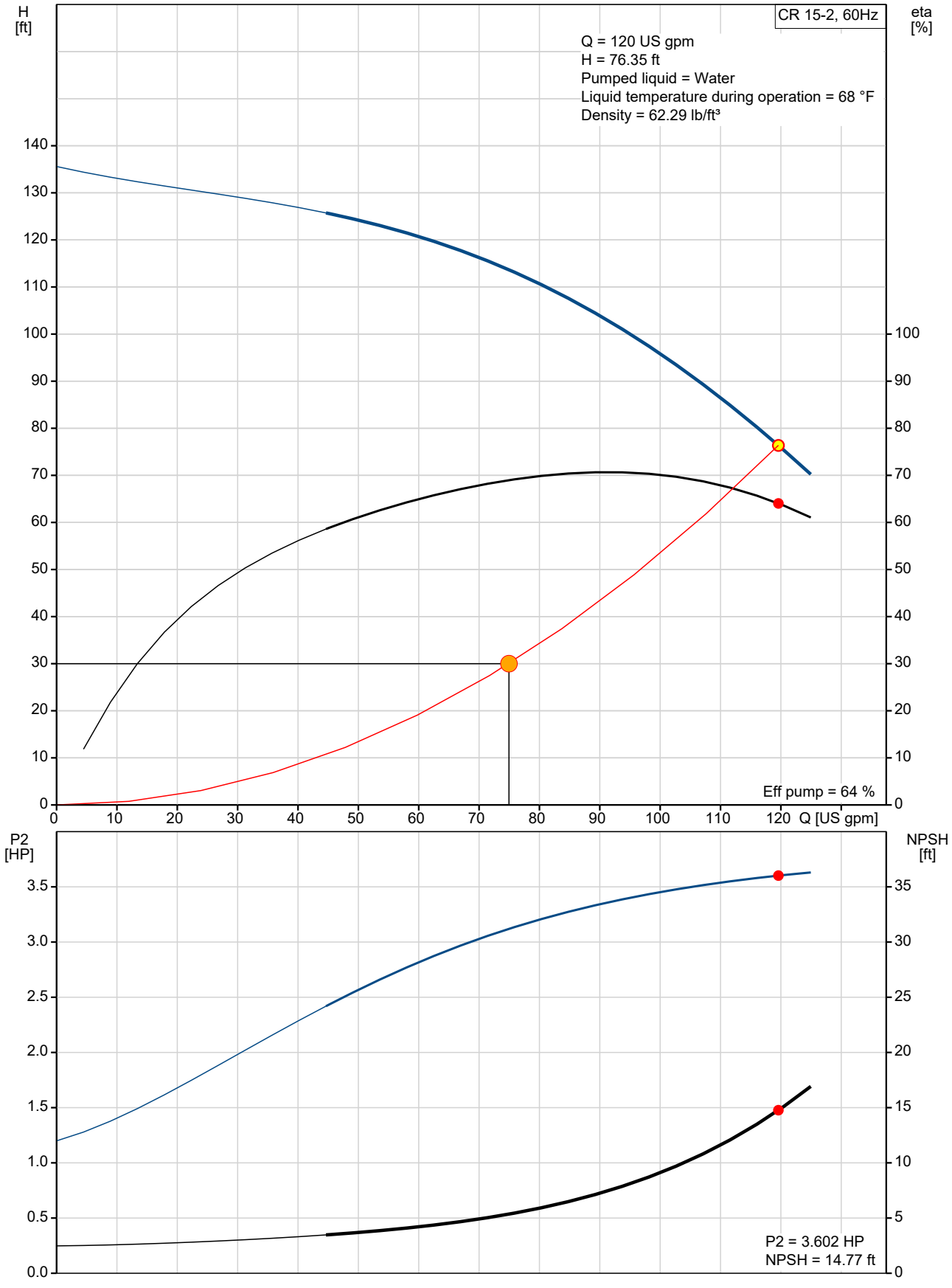

Company name:
Created by:
Phone:

Date: 5/1/2017

Description	Value
General information:	
Product name:	CR 15-2 A-B-A-E-HQQE
Product No.:	96523608
EAN:	5700396908120
Price:	On request
Technical:	
Speed for pump data:	3461 rpm
Actual calculated flow:	120 US gpm
Resulting head of the pump:	76.35 ft
Head max:	135.5 ft
Impellers:	02
Primary shaft seal:	HQQE
Approvals on nameplate:	ANSI/NSF61
Curve tolerance:	ISO9906:2012 3B
Stages:	2
Pump version:	A
Model:	A
Cooling:	TEFC
Materials:	
Pump housing:	Cast iron
	EN-JL1030
	ASTM A48-30 B
Impeller:	Stainless steel
	DIN W.-Nr. 1.4301
	AISI 304
Material code:	A
Code for rubber:	E
Installation:	
Maximum ambient temperature:	140 °F
Max pressure at stated temperature:	145 psi / 250 °F
	145 psi / -4 °F
Flange standard:	OVAL
Connect code:	B
Pipe connection:	2" NPT
Flange size for motor:	182TC
Liquid:	
Pumped liquid:	Water
Liquid temperature range:	-4 .. 248 °F
Q_OpFluidTemp:	68 °F
Density:	62.29 lb/ft³
Kinematic viscosity:	1 cSt
Electrical data:	
Motor type:	112CA
Rated power - P2:	5.5 HP
Power (P2) required by pump:	5 HP
Main frequency:	60 Hz
Rated voltage:	3 x 208-230YY/460Y V
Service factor:	1,15
Rated current:	14,1-13,1/7,29 A
Starting current:	1000-1470 %
Cos phi - power factor:	0,89-0,86
Rated speed:	3525-3540 rpm
Motor efficiency at 3/4 load:	88.6 %
Motor efficiency at 1/2 load:	85.2 %

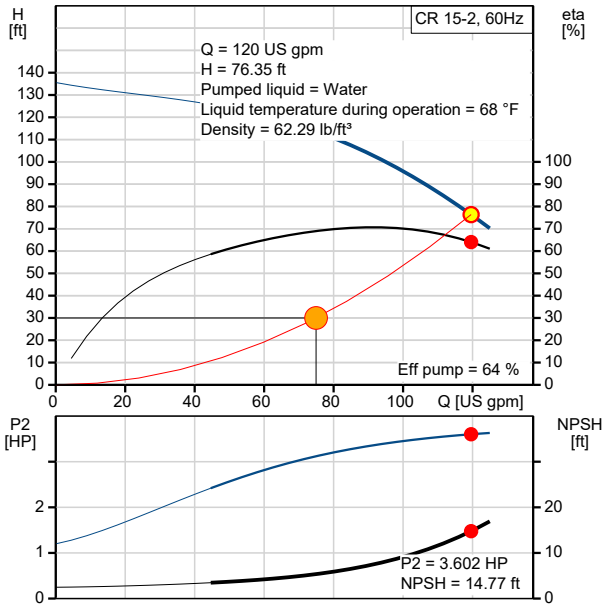

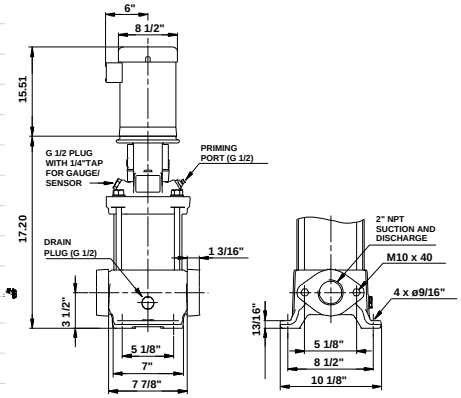

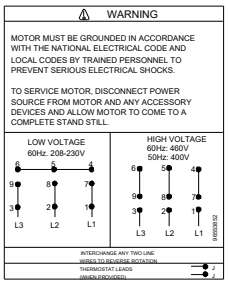

Company name:
Created by:
Phone:

Date: 5/1/2017

Description	Value
Number of poles:	2
Enclosure class (IEC 34-5):	55 Dust/Jetting
Insulation class (IEC 85):	F
Motor protection:	PTC
Motor Number:	85904389
Others:	
Net weight:	172 lb
Gross weight:	190 lb
Shipping volume:	4.94 ft³

Company name:
Created by:
Phone:

Date: 5/1/2017

96523608 CR 15-2 60 Hz

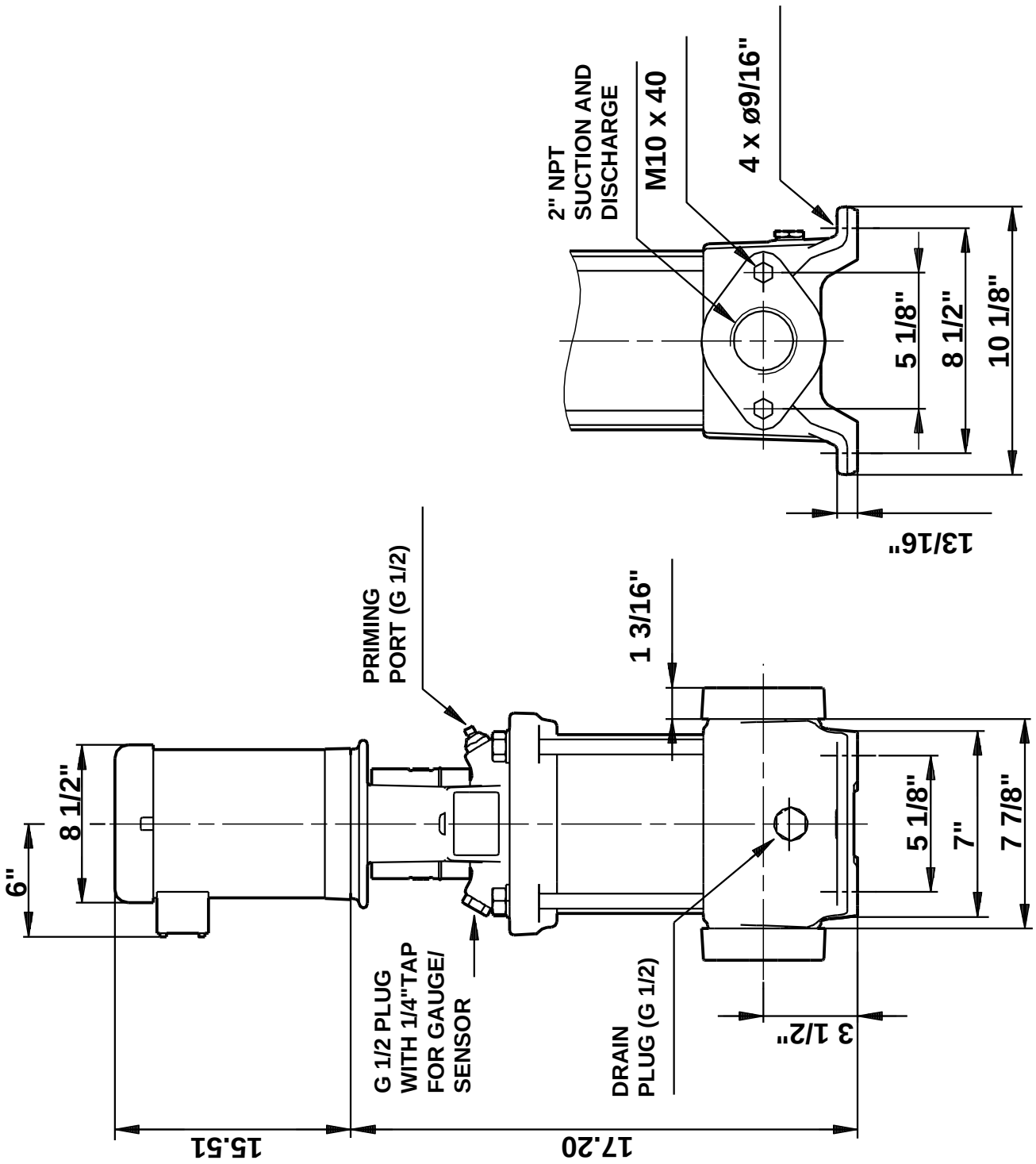

Note! All units are in [mm] unless otherwise stated.
Disclaimer: This simplified dimensional drawing does not show all details.

Company name:
Created by:
Phone:

Date: 5/1/2017

96523608 CR 15-2 60 Hz

⚠ WARNING

MOTOR MUST BE GROUNDED IN ACCORDANCE WITH THE NATIONAL ELECTRICAL CODE AND LOCAL CODES BY TRAINED PERSONNEL TO PREVENT SERIOUS ELECTRICAL SHOCKS.

TO SERVICE MOTOR, DISCONNECT POWER SOURCE FROM MOTOR AND ANY ACCESSORY DEVICES AND ALLOW MOTOR TO COME TO A COMPLETE STAND STILL.

LOW VOLTAGE
60Hz. 208-230V

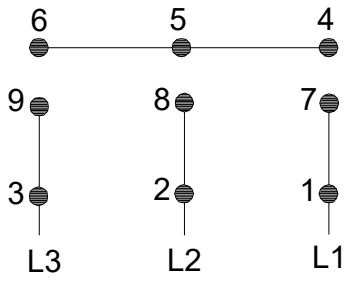

HIGH VOLTAGE
60Hz: 460V
50Hz: 400V

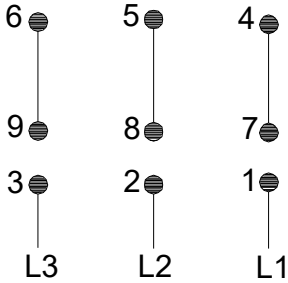

96553852

INTERCHANGE ANY TWO LINE
WIRES TO REVERSE ROTATION

THERMOSTAT LEADS — J
(WHEN PROVIDED) — J

All units are [mm] unless otherwise presented.

Company name:
Created by:
Phone:

Date: 10/2/2017

Position	Count	Description
	1	**ML132DA**

Product photo could vary from the actual product

Product No.: 85904392

The motor is a 3-phase AC standard motor.
Grundfos Blueflux(R) technology represents the best from Grundfos within energy efficient motors and variable frequency drives (MG motors, MGE motors and CUE drives). Grundfos Blueflux(R) solutions either meet or exceed legislative requirements such as the EuP IE3 grade.

Technical:

Approvals on motor nameplate:	EAC,ECUR,IE3,CURUS,CC122B,CE
Cable gland:	2 x PG 21
Drain holes:	Yes (closed)

Installation:

Range of ambient temperature:	-22 .. 140 °F
Flange size for motor:	213TC

Electrical data:

Motor type:	132DA
IE Efficiency class:	NEMA Premium / IE3 60Hz
Rated power - P2:	7.5 HP
Main frequency:	60 Hz
Rated voltage:	3 x 208-230YY/460Y V
Service factor:	1,15
Rated current:	19,5-18,1/9,09 A
Maximum current consumption:	-/ A
Starting current:	1020-1480 %
Cos phi - power factor:	0,89-0,86
Rated speed:	3490-3515 rpm
Rated full-load torque:	11.06 ft lb
Locked-rotor torque:	320-530 %
Breakdown torque:	400-660 %
Moment of inertia:	0.23 lb ft²
IE efficiency:	IE3 89,5%
Motor efficiency at full load:	89.5 %
Motor efficiency at 3/4 load:	89.7 %
Motor efficiency at 1/2 load:	88.3 %
Number of poles:	2
Enclosure class (IEC 34-5):	55 Dust/Jetting
Insulation class (IEC 85):	F

Others:

Label:	Grundfos Blueflux
Net weight:	94.8 lb
Color/Type:	NCS 9000 gloss 40+-10 /E-coat

Company name:
Created by:
Phone:

Date: 10/2/2017

Description	Value
General information:	
Product name:	ML132DA
Product No.:	85904392
EAN:	5710629538291
Technical:	
Shaft diameter:	1.38 in
Shaft end length:	3.39 in
Approvals on motor nameplate:	EAC,ECUR,IE3,CURUS,CC122 B,CE
Model:	H3
Cooling:	TEFC
Cable gland:	2 x PG 21
Drain holes:	Yes (closed)
Installation:	
Range of ambient temperature:	-22 .. 140 °F
Flange size for motor:	213TC
Electrical data:	
Motor type:	132DA
IE Efficiency class:	NEMA Premium / IE3 60Hz
Rated power - P2:	7.5 HP
Main frequency:	60 Hz
Rated voltage:	3 x 208-230YY/460Y V
Service factor:	1,15
Rated current:	19,5-18,1/9,09 A
Maximum current consumption:	-/ A
Starting current:	1020-1480 %
Load current:	22,4-20,8/10,4 A
Cos phi - power factor:	0,89-0,86
Rated speed:	3490-3515 rpm
Rated full-load torque:	11.06 ft lb
Locked-rotor torque:	320-530 %
Breakdown torque:	400-660 %
Moment of inertia:	0.23 lb ft²
IE efficiency:	IE3 89,5%
Motor efficiency at full load:	89.5 %
Motor efficiency at 3/4 load:	89.7 %
Motor efficiency at 1/2 load:	88.3 %
Number of poles:	2
Enclosure class (IEC 34-5):	55 Dust/Jetting
Insulation class (IEC 85):	F
Motor protection:	PTC
Tropic protec:	No
Thermal protec:	external
R1:	0,67 ohm
R2:	0,67 ohm
R3:	0,67 ohm
Winding 1:	PHASE 1
Winding 2:	PHASE 2
Winding 3:	PHASE 3
Mounting design per IEC 34-7:	NEMA type C
Others:	
Label:	Grundfos Blueflux
Net weight:	94.8 lb
Color/Type:	NCS 9000 gloss 40+-10 /E-coat

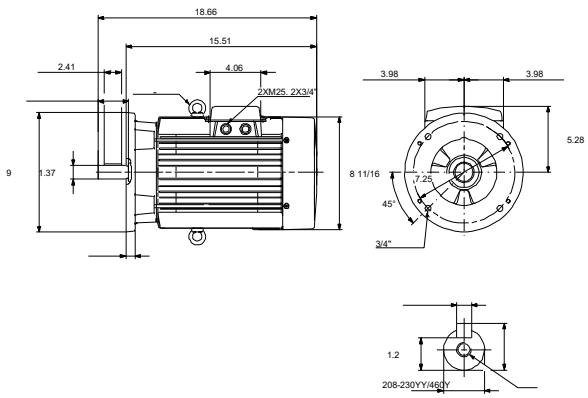

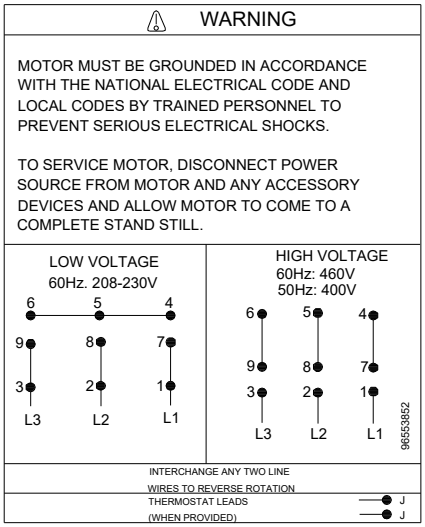

Company name:
Created by:
Phone:

Date: 10/2/2017

85904392 ML132DA 60 Hz

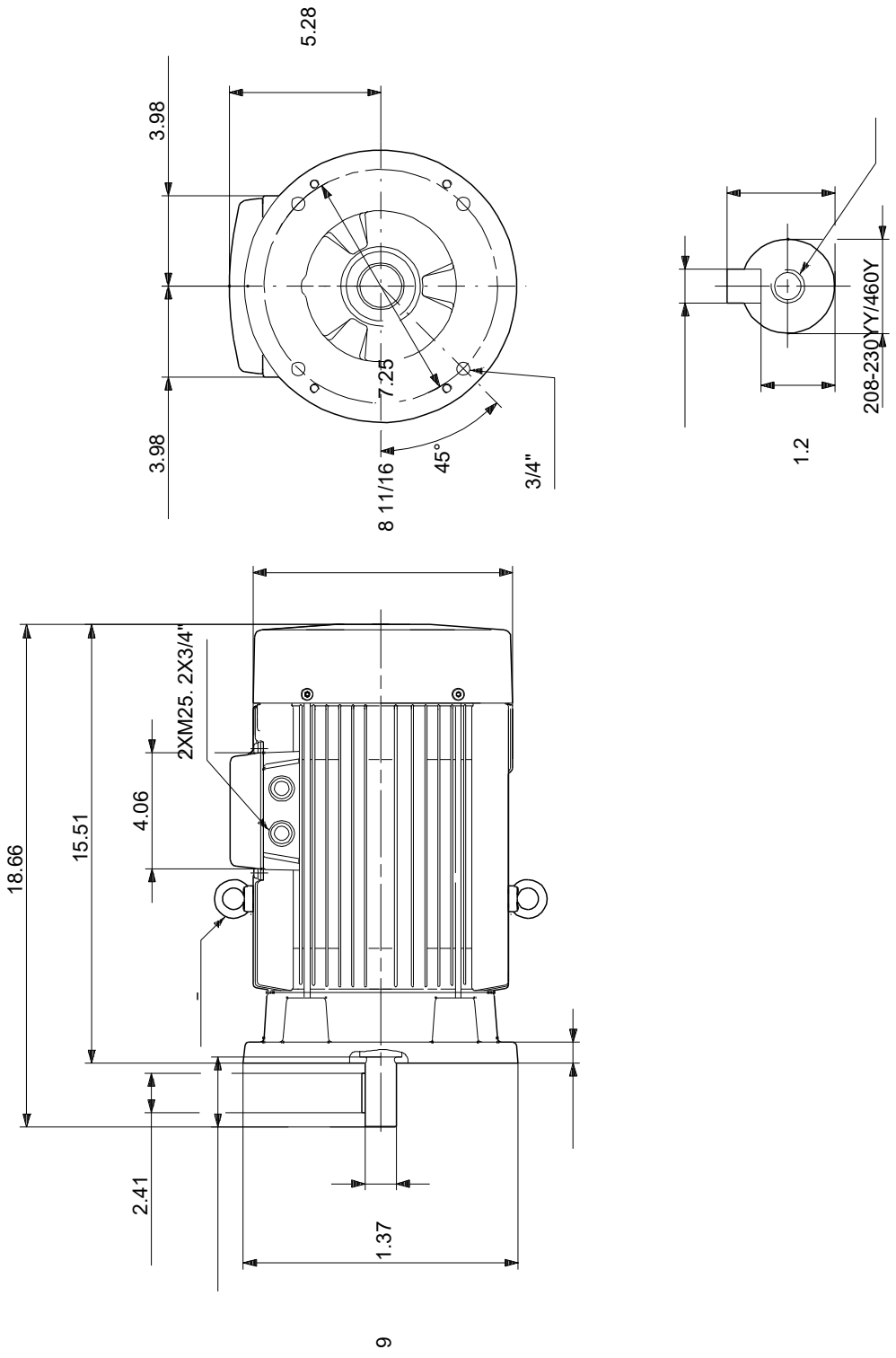

Note! All units are in [mm] unless otherwise stated.
Disclaimer: This simplified dimensional drawing does not show all details.

85904392 ML132DA 60 Hz

WARNING

MOTOR MUST BE GROUNDED IN ACCORDANCE WITH THE NATIONAL ELECTRICAL CODE AND LOCAL CODES BY TRAINED PERSONNEL TO PREVENT SERIOUS ELECTRICAL SHOCKS.

TO SERVICE MOTOR, DISCONNECT POWER SOURCE FROM MOTOR AND ANY ACCESSORY DEVICES AND ALLOW MOTOR TO COME TO A COMPLETE STAND STILL.

LOW VOLTAGE
60Hz. 208-230V

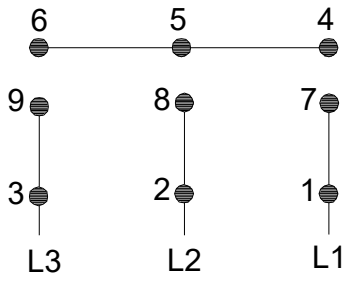

HIGH VOLTAGE
60Hz: 460V
50Hz: 400V

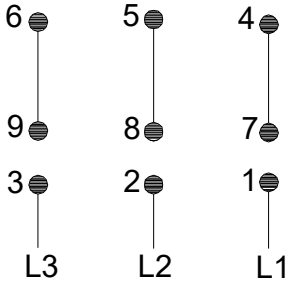

96553852

INTERCHANGE ANY TWO LINE
WIRES TO REVERSE ROTATION

THERMOSTAT LEADS — J
(WHEN PROVIDED) — J

All units are [mm] unless otherwise presented.

GRUNDFOS

Company name:
Created by:
Phone:

Date: 5/4/2017

Position	Count	Description
	1	**CR 15-3 A-B-A-E-HQQE**

Product photo could vary from the actual product

Product No.: 97743767
Vertical, non-self-priming, multistage, in-line, centrifugal pump for installation in pipe systems and mounting on a foundation.

The pump has the following characteristics:
- Impellers and intermediate chambers are made of Stainless steel, DIN W.-Nr. 1.4301.
- Pump head and base are made of Cast iron.
- The shaft seal has assembly length according to EN 12756.
- Power transmission is via cast iron split coupling.
- Pipework connection is via OVAL flanges.

The motor is a 3-phase AC motor.

Liquid:

Pumped liquid:	Water
Liquid temperature range:	-4 .. 248 °F
Q_OpFluidTemp:	68 °F
Density:	62.29 lb/ft³
Kinematic viscosity:	1 cSt

Technical:

Speed for pump data:	3461 rpm
Actual calculated flow:	88.9 US gpm
Resulting head of the pump:	154.4 ft
Primary shaft seal:	HQQE
Approvals on nameplate:	ANSI/NSF61
Curve tolerance:	ISO9906:2012 3B

Materials:

Pump housing:	Cast iron EN-JL1030 ASTM A48-30 B
Impeller:	Stainless steel DIN W.-Nr. 1.4301 AISI 304

Installation:

Maximum ambient temperature:	140 °F
Max pressure at stated temperature:	145 psi / 250 °F 145 psi / -4 °F

GRUNDFOS

Company name:
Created by:
Phone:

Date: 5/4/2017

Position	Count	Description	
		Flange standard:	OVAL
		Pipe connection:	2" NPT
		Flange size for motor:	213TC
		Electrical data:	
		Motor type:	132DA
		Rated power - P2:	7.5 HP
		Main frequency:	60 Hz
		Rated voltage:	3 x 208-230YY/460Y V
		Rated current:	19,5-18,1/9,09 A
		Starting current:	1020-1480 %
		Cos phi - power factor:	0,89-0,86
		Rated speed:	3490-3515 rpm
		Motor efficiency at 3/4 load:	89.7 %
		Motor efficiency at 1/2 load:	88.3 %
		Number of poles:	2
		Enclosure class (IEC 34-5):	55 Dust/Jetting
		Insulation class (IEC 85):	F
		Others:	
		Net weight:	187 lb
		Gross weight:	205 lb

Company name:
Created by:
Phone:

Date: 5/4/2017

Description	Value
General information:	
Product name:	CR 15-3 A-B-A-E-HQQE
Product No.:	97743767
EAN:	5710623600192
Price:	On request
Technical:	
Speed for pump data:	3461 rpm
Actual calculated flow:	88.9 US gpm
Resulting head of the pump:	154.4 ft
Head max:	200.5 ft
Impellers:	03
Primary shaft seal:	HQQE
Approvals on nameplate:	ANSI/NSF61
Curve tolerance:	ISO9906:2012 3B
Stages:	3
Pump version:	A
Model:	A
Cooling:	TEFC
Materials:	
Pump housing:	Cast iron
	EN-JL1030
	ASTM A48-30 B
Impeller:	Stainless steel
	DIN W.-Nr. 1.4301
	AISI 304
Material code:	A
Code for rubber:	E
Installation:	
Maximum ambient temperature:	140 °F
Max pressure at stated temperature:	145 psi / 250 °F
	145 psi / -4 °F
Flange standard:	OVAL
Connect code:	B
Pipe connection:	2" NPT
Flange size for motor:	213TC
Liquid:	
Pumped liquid:	Water
Liquid temperature range:	-4 .. 248 °F
Q_OpFluidTemp:	68 °F
Density:	62.29 lb/ft³
Kinematic viscosity:	1 cSt
Electrical data:	
Motor type:	132DA
Rated power - P2:	7.5 HP
Main frequency:	60 Hz
Rated voltage:	3 x 208-230YY/460Y V
Rated current:	19,5-18,1/9,09 A
Starting current:	1020-1480 %
Cos phi - power factor:	0,89-0,86
Rated speed:	3490-3515 rpm
Motor efficiency at 3/4 load:	89.7 %
Motor efficiency at 1/2 load:	88.3 %
Number of poles:	2
Enclosure class (IEC 34-5):	55 Dust/Jetting

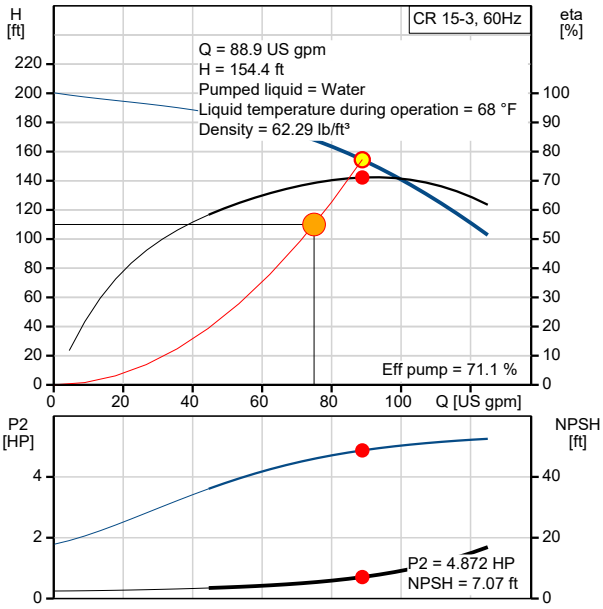

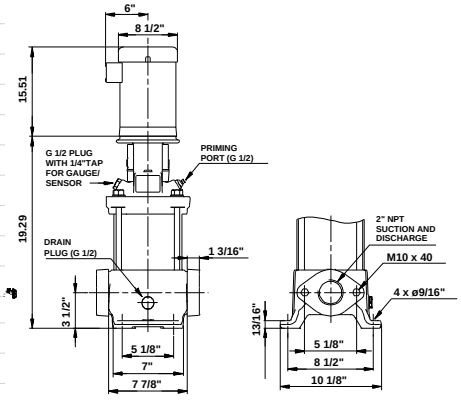

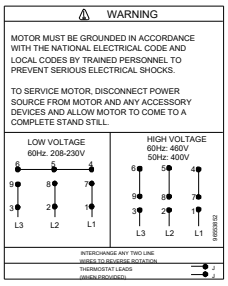

Company name:
Created by:
Phone:

Date: 5/4/2017

Description	Value
Insulation class (IEC 85):	F
Motor protection:	PTC
Motor Number:	85904392
Others:	
Net weight:	187 lb
Gross weight:	205 lb

Company name:
Created by:
Phone:

Date: 10/2/2017

Position	Count	Description
	1	**ML132DA**

Product photo could vary from the actual product

Product No.: 85904392

The motor is a 3-phase AC standard motor.
Grundfos Blueflux(R) technology represents the best from Grundfos within energy efficient motors and variable frequency drives (MG motors, MGE motors and CUE drives). Grundfos Blueflux(R) solutions either meet or exceed legislative requirements such as the EuP IE3 grade.

Technical:

Approvals on motor nameplate:	EAC,ECUR,IE3,CURUS,CC122B,CE
Cable gland:	2 x PG 21
Drain holes:	Yes (closed)

Installation:

Range of ambient temperature:	-22 .. 140 °F
Flange size for motor:	213TC

Electrical data:

Motor type:	132DA
IE Efficiency class:	NEMA Premium / IE3 60Hz
Rated power - P2:	7.5 HP
Main frequency:	60 Hz
Rated voltage:	3 x 208-230YY/460Y V
Service factor:	1,15
Rated current:	19,5-18,1/9,09 A
Maximum current consumption:	-/ A
Starting current:	1020-1480 %
Cos phi - power factor:	0,89-0,86
Rated speed:	3490-3515 rpm
Rated full-load torque:	11.06 ft lb
Locked-rotor torque:	320-530 %
Breakdown torque:	400-660 %
Moment of inertia:	0.23 lb ft²
IE efficiency:	IE3 89,5%
Motor efficiency at full load:	89.5 %
Motor efficiency at 3/4 load:	89.7 %
Motor efficiency at 1/2 load:	88.3 %
Number of poles:	2
Enclosure class (IEC 34-5):	55 Dust/Jetting
Insulation class (IEC 85):	F

Others:

Label:	Grundfos Blueflux
Net weight:	94.8 lb
Color/Type:	NCS 9000 gloss 40+-10 /E-coat

Company name:
Created by:
Phone:

Date: 10/2/2017

Description	Value
General information:	
Product name:	ML132DA
Product No.:	85904392
EAN:	5710629538291
Technical:	
Shaft diameter:	1.38 in
Shaft end length:	3.39 in
Approvals on motor nameplate:	EAC,ECUR,IE3,CURUS,CC122 B,CE
Model:	H3
Cooling:	TEFC
Cable gland:	2 x PG 21
Drain holes:	Yes (closed)
Installation:	
Range of ambient temperature:	-22 .. 140 °F
Flange size for motor:	213TC
Electrical data:	
Motor type:	132DA
IE Efficiency class:	NEMA Premium / IE3 60Hz
Rated power - P2:	7.5 HP
Main frequency:	60 Hz
Rated voltage:	3 x 208-230YY/460Y V
Service factor:	1,15
Rated current:	19,5-18,1/9,09 A
Maximum current consumption:	-/ A
Starting current:	1020-1480 %
Load current:	22,4-20,8/10,4 A
Cos phi - power factor:	0,89-0,86
Rated speed:	3490-3515 rpm
Rated full-load torque:	11.06 ft lb
Locked-rotor torque:	320-530 %
Breakdown torque:	400-660 %
Moment of inertia:	0.23 lb ft²
IE efficiency:	IE3 89,5%
Motor efficiency at full load:	89.5 %
Motor efficiency at 3/4 load:	89.7 %
Motor efficiency at 1/2 load:	88.3 %
Number of poles:	2
Enclosure class (IEC 34-5):	55 Dust/Jetting
Insulation class (IEC 85):	F
Motor protection:	PTC
Tropic protec:	No
Thermal protec:	external
R1:	0,67 ohm
R2:	0,67 ohm
R3:	0,67 ohm
Winding 1:	PHASE 1
Winding 2:	PHASE 2
Winding 3:	PHASE 3
Mounting design per IEC 34-7:	NEMA type C
Others:	
Label:	Grundfos Blueflux
Net weight:	94.8 lb
Color/Type:	NCS 9000 gloss 40+-10 /E-coat

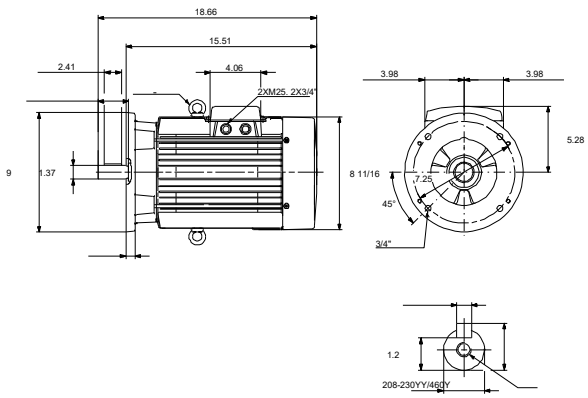

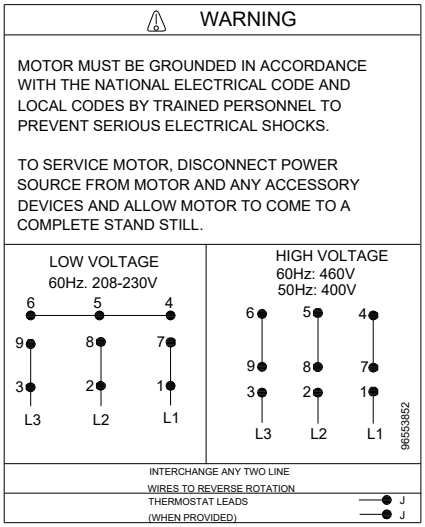

Company name:
Created by:
Phone:

Date: 10/2/2017

85904392 ML132DA 60 Hz

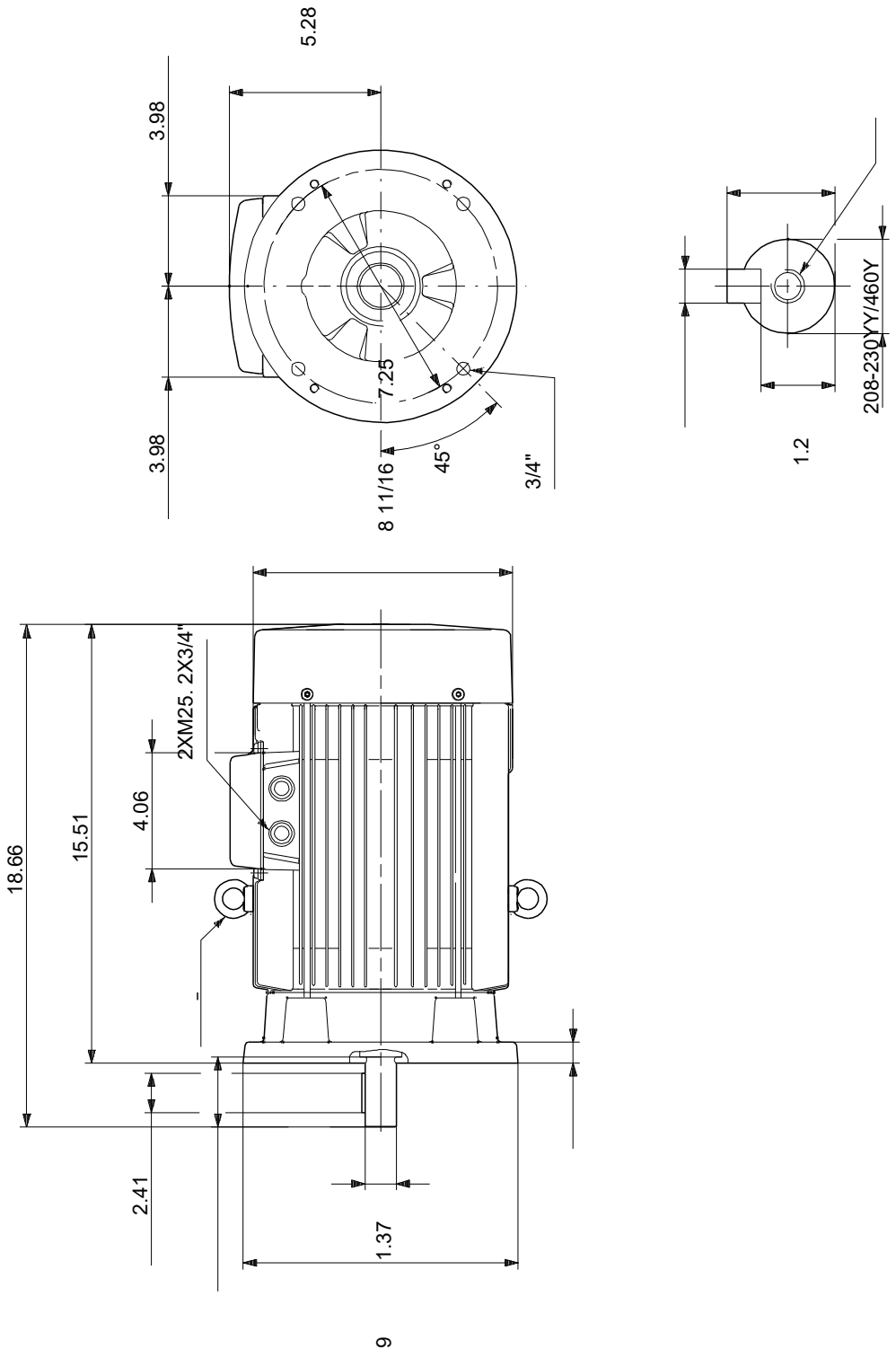

Note! All units are in [mm] unless otherwise stated.
Disclaimer: This simplified dimensional drawing does not show all details.

85904392 ML132DA 60 Hz

WARNING

MOTOR MUST BE GROUNDED IN ACCORDANCE WITH THE NATIONAL ELECTRICAL CODE AND LOCAL CODES BY TRAINED PERSONNEL TO PREVENT SERIOUS ELECTRICAL SHOCKS.

TO SERVICE MOTOR, DISCONNECT POWER SOURCE FROM MOTOR AND ANY ACCESSORY DEVICES AND ALLOW MOTOR TO COME TO A COMPLETE STAND STILL.

LOW VOLTAGE
60Hz. 208-230V

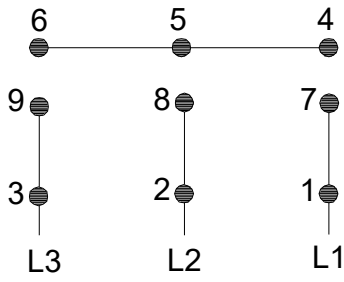

HIGH VOLTAGE
60Hz: 460V
50Hz: 400V

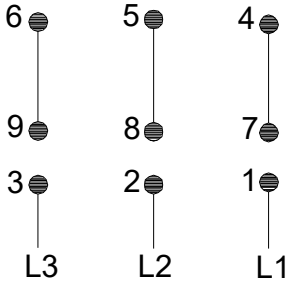

96553852

INTERCHANGE ANY TWO LINE
WIRES TO REVERSE ROTATION

THERMOSTAT LEADS — J
(WHEN PROVIDED) — J

All units are [mm] unless otherwise presented.

Company name:
Created by:
Phone:

Date: 10/2/2017

Tender Text

Product No.: 96523610
CR 15-4 A-B-A-E-HQQE
Vertical, non-self-priming, multistage, in-line, centrifugal pump for installation in pipe systems and mounting on a foundation.

The pump has the following characteristics:
- Impellers and intermediate chambers are made of Stainless steel, DIN W.-Nr. 1.4301.
- Pump head and base are made of Cast iron.
- The shaft seal has assembly length according to EN 12756.
- Power transmission is via cast iron split coupling.
- Pipework connection is via OVAL flanges.

The motor is a 3-phase AC motor.

Liquid:	
Pumped liquid:	Water
Liquid temperature range:	-4 .. 248 °F
Liquid temperature during operation:	68 °F
Density:	62.29 lb/ft³
Kinematic viscosity:	1 cSt

Technical:

Speed for pump data:	3467 rpm
Actual calculated flow:	10 US gpm
Resulting head of the pump:	262.9 ft
Primary shaft seal:	HQQE
Approvals on nameplate:	ANSI/NSF61
Curve tolerance:	ISO9906:2012 3B

Materials:

Pump housing:	Cast iron EN-JL1030 ASTM A48-30 B
Impeller:	Stainless steel DIN W.-Nr. 1.4301 AISI 304

Installation:

Maximum ambient temperature:	140 °F
Max pressure at stated temperature:	145 psi / 250 °F 145 psi / -4 °F
Flange standard:	OVAL
Pipe connection:	2" NPT
Flange size for motor:	213TC

Electrical data:

Motor type:	132DA
Rated power - P2:	7.5 HP
Power (P2) required by pump:	7.5 HP
Main frequency:	60 Hz
Rated voltage:	3 x 208-230YY/460Y V
Service factor:	1,15
Rated current:	19,5-18,1/9,09 A
Starting current:	1020-1480 %
Cos phi - power factor:	0,89-0,86
Rated speed:	3490-3515 rpm
Motor efficiency at 3/4 load:	89.7 %
Motor efficiency at 1/2 load:	88.3 %
Number of poles:	2
Enclosure class (IEC 34-5):	55 Dust/Jetting
Insulation class (IEC 85):	F

Others:

Net weight:	190 lb
Gross weight:	207 lb
Shipping volume:	4.94 ft³

Company name:
Created by:
Phone:

Date: 10/2/2017

Position	Count	Description
	1	**CR 15-4 A-B-A-E-HQQE**

Product No.: 96523610
Vertical, non-self-priming, multistage, in-line, centrifugal pump for installation in pipe systems and mounting on a foundation.

The pump has the following characteristics:
- Impellers and intermediate chambers are made of Stainless steel, DIN W.-Nr. 1.4301.
- Pump head and base are made of Cast iron.
- The shaft seal has assembly length according to EN 12756.
- Power transmission is via cast iron split coupling.
- Pipework connection is via OVAL flanges.

The motor is a 3-phase AC motor.

Liquid:

Pumped liquid:	Water
Liquid temperature range:	-4 .. 248 °F
Liquid temperature during operation:	68 °F
Density:	62.29 lb/ft³
Kinematic viscosity:	1 cSt

Technical:

Speed for pump data:	3467 rpm
Actual calculated flow:	10 US gpm
Resulting head of the pump:	262.9 ft
Primary shaft seal:	HQQE
Approvals on nameplate:	ANSI/NSF61
Curve tolerance:	ISO9906:2012 3B

Materials:

Pump housing:	Cast iron EN-JL1030 ASTM A48-30 B
Impeller:	Stainless steel DIN W.-Nr. 1.4301 AISI 304

Installation:

Maximum ambient temperature:	140 °F
Max pressure at stated temperature:	145 psi / 250 °F 145 psi / -4 °F
Flange standard:	OVAL
Pipe connection:	2" NPT
Flange size for motor:	213TC

GRUNDFOS

Company name:
Created by:
Phone:

Date: 10/2/2017

Position	Count	Description

Electrical data:

Motor type:	132DA
Rated power - P2:	7.5 HP
Power (P2) required by pump:	7.5 HP
Main frequency:	60 Hz
Rated voltage:	3 x 208-230YY/460Y V
Service factor:	1,15
Rated current:	19,5-18,1/9,09 A
Starting current:	1020-1480 %
Cos phi - power factor:	0,89-0,86
Rated speed:	3490-3515 rpm
Motor efficiency at 3/4 load:	89.7 %
Motor efficiency at 1/2 load:	88.3 %
Number of poles:	2
Enclosure class (IEC 34-5):	55 Dust/Jetting
Insulation class (IEC 85):	F

Others:

Net weight:	190 lb
Gross weight:	207 lb
Shipping volume:	4.94 ft³

Company name:
Created by:
Phone:

Date: 10/2/2017

96523610 CR 15-4 60 Hz

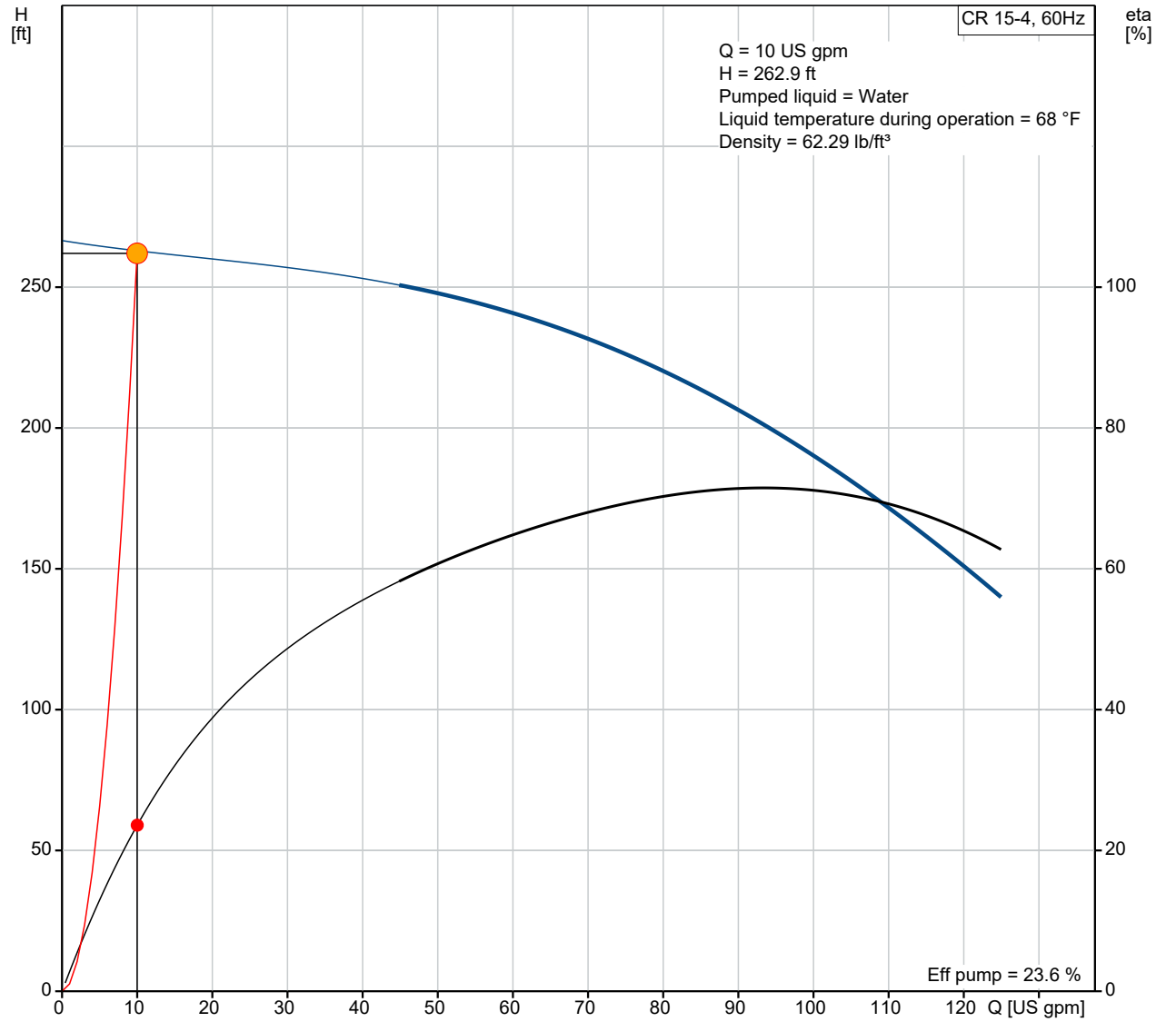

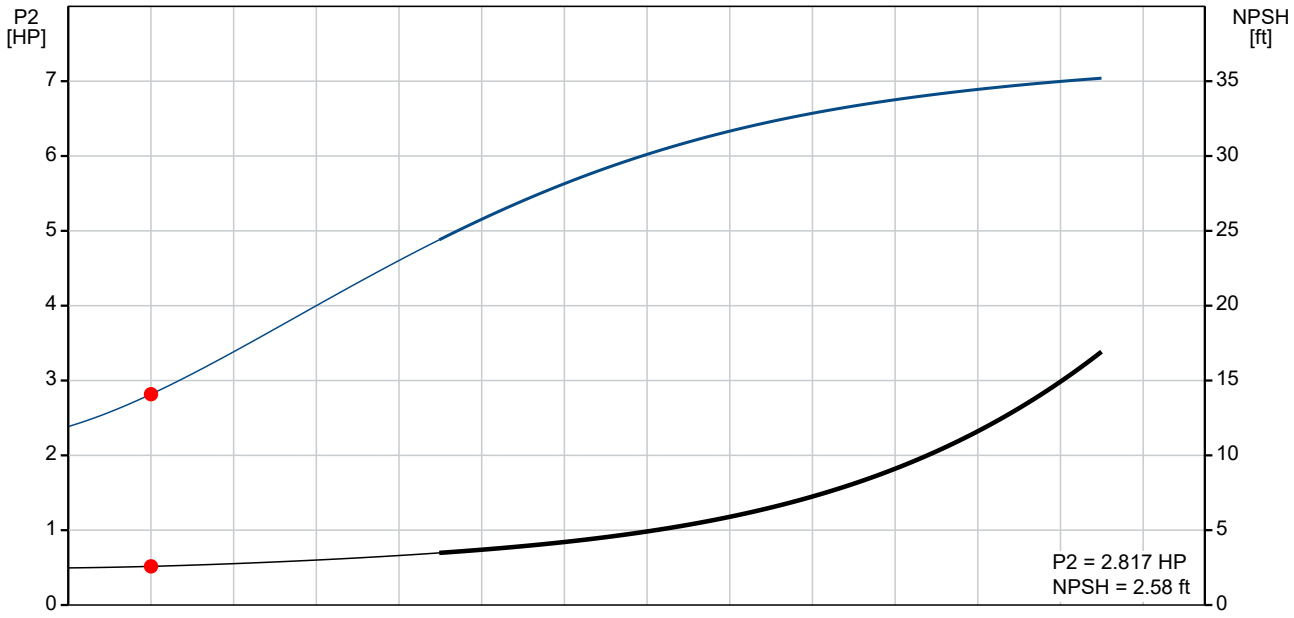

Company name:
Created by:
Phone:

Date: 10/2/2017

Description	Value
General information:	
Product name:	CR 15-4 A-B-A-E-HQQE
Product No.:	96523610
EAN:	5700396908168
Technical:	
Speed for pump data:	3467 rpm
Actual calculated flow:	10 US gpm
Resulting head of the pump:	262.9 ft
Head max:	266.4 ft
Impellers:	04
Primary shaft seal:	HQQE
Approvals on nameplate:	ANSI/NSF61
Curve tolerance:	ISO9906:2012 3B
Stages:	4
Pump version:	A
Model:	A
Cooling:	TEFC
Materials:	
Pump housing:	Cast iron
	EN-JL1030
	ASTM A48-30 B
Impeller:	Stainless steel
	DIN W.-Nr. 1.4301
	AISI 304
Material code:	A
Code for rubber:	E
Installation:	
Maximum ambient temperature:	140 °F
Max pressure at stated temperature:	145 psi / 250 °F
	145 psi / -4 °F
Flange standard:	OVAL
Connect code:	B
Pipe connection:	2" NPT
Flange size for motor:	213TC
Liquid:	
Pumped liquid:	Water
Liquid temperature range:	-4 .. 248 °F
Liquid temperature during operation:	68 °F
Density:	62.29 lb/ft³
Kinematic viscosity:	1 cSt
Electrical data:	
Motor type:	132DA
Rated power - P2:	7.5 HP
Power (P2) required by pump:	7.5 HP
Main frequency:	60 Hz
Rated voltage:	3 x 208-230YY/460Y V
Service factor:	1,15
Rated current:	19,5-18,1/9,09 A
Starting current:	1020-1480 %
Cos phi - power factor:	0,89-0,86
Rated speed:	3490-3515 rpm
Motor efficiency at 3/4 load:	89.7 %
Motor efficiency at 1/2 load:	88.3 %
Number of poles:	2

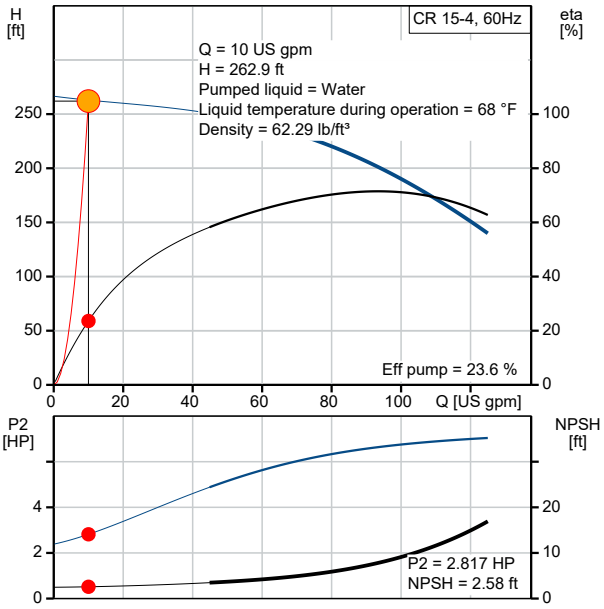

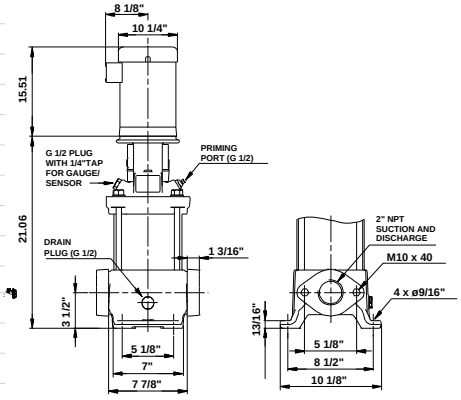

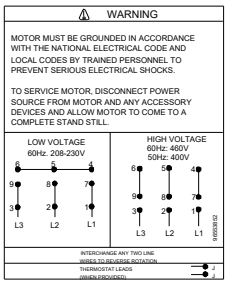

Company name:
Created by:
Phone:

Date: 10/2/2017

Description	Value
Enclosure class (IEC 34-5):	55 Dust/Jetting
Insulation class (IEC 85):	F
Motor protection:	PTC
Motor Number:	85904392
Others:	
Net weight:	190 lb
Gross weight:	207 lb
Shipping volume:	4.94 ft³

Company name:
Created by:
Phone:

Date: 10/2/2017

96523610 CR 15-4 60 Hz

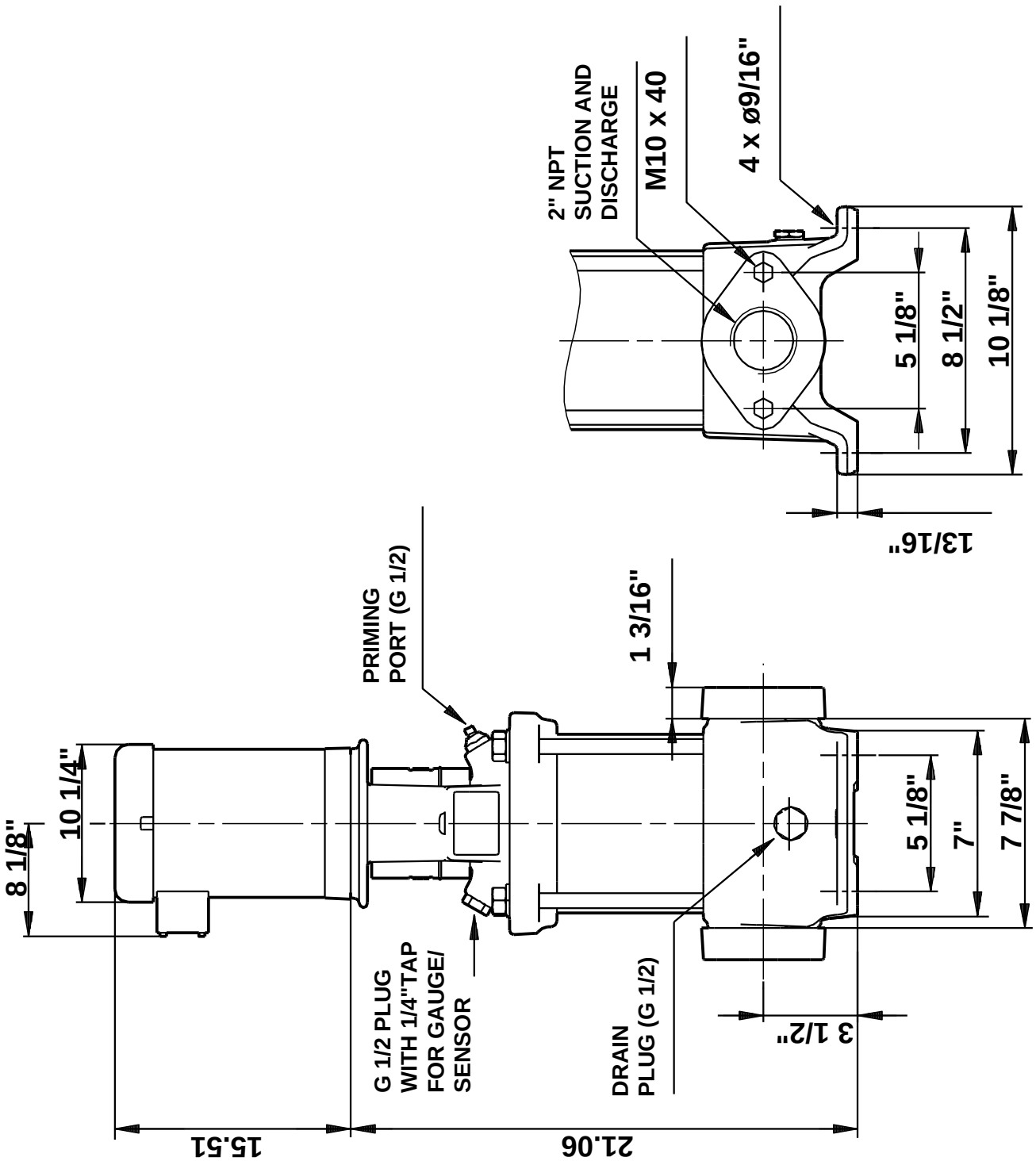

Note! All units are in [mm] unless otherwise stated.
Disclaimer: This simplified dimensional drawing does not show all details.

Company name:
Created by:
Phone:

Date: 10/2/2017

96523610 CR 15-4 60 Hz

WARNING

MOTOR MUST BE GROUNDED IN ACCORDANCE WITH THE NATIONAL ELECTRICAL CODE AND LOCAL CODES BY TRAINED PERSONNEL TO PREVENT SERIOUS ELECTRICAL SHOCKS.

TO SERVICE MOTOR, DISCONNECT POWER SOURCE FROM MOTOR AND ANY ACCESSORY DEVICES AND ALLOW MOTOR TO COME TO A COMPLETE STAND STILL.

LOW VOLTAGE
60Hz. 208-230V

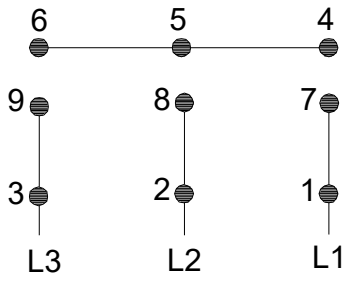

HIGH VOLTAGE
60Hz: 460V
50Hz: 400V

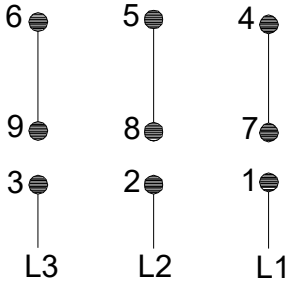

96553852

INTERCHANGE ANY TWO LINE
WIRES TO REVERSE ROTATION

THERMOSTAT LEADS — J
(WHEN PROVIDED) — J

All units are [mm] unless otherwise presented.

PROMINENT SYSTEMS AQUASORB LOW PRESSURE ADSORBERS

Prominent Systems Low Pressure Liquid Phase Systems are manufactured and designed for a wide range of applications.

- Water filtration
- Groundwater remediation
- Bio-Remediation Contactor Units
- Oil and Grease Removal
- Pilot Study
- Spill Cleanup
- De-chlorination

Benefits and Features

- Available for Rental and Sale
- Optional: Automatic Pressure Relive Valves, Sample Ports, and Industrial Pressure Gauges
- Top and side manways for easy access and internal inspections during media exchange
- Optional: Skid mounted for easy mobilization and operations
- Optional: Connected with complete piping manifold for lead or lag configurations
- Heavy duty industrial epoxy lining for corrosion prevention

Turnkey Service, Installation, and Operation Parameters

Prominent Systems can provide a complete service package with includes turnkey filter media services .Prominent Systems performs on site media exchange service when the carbon is spent. The spent carbon will be removed and fresh carbon will be loaded on site after inspection of internals. Spent carbon is disposed according to state and federal regulations after profiling process. The change out frequency will base on several operating conditions such as VOC concentration, flow rates, operating temperature, and carbon type. Prominent Systems isotherm modeling can help to size the filters and estimate the GAC consumption and optimize your system to perform better.

PROMINENT SYSTEMS LP VESSELS	
	AQUASORB 1000
Outside Dimensions (Dia x Height)	36” x 89”
Inlet / Outlet[1] (I.D.)	4” Stainless Steel
Footprint (Length x Width)	36” x 36”
Internal Screens	SCH 80 PVC
Interior Coating	Epoxy
Exterior Coating	Epoxy / Urethane
Empty Weight / Operating Weight (lbs.)	1,600/3,100
Approx. Carbon Bed Weight (lbs.)	1,000
Flow, GPM (max.)	90
Pressure, psig (max.)	60
Temperature, °F (max.)	140°

Safety Notice: In closed or partially closed containers and vessels, oxygen depletion may reach hazardous levels. The adsorption of organic compounds into activated carbon generates an exothermic reaction. If heat sources are not properly controlled, the carbon bed temperatures may rise and result in bed fires. In certain applications where the risk of ignition is significant, activated carbon might not be the suitable treatment method.

If workers are to enter a vessel containing carbon, appropriate sampling and work procedures for potentially low oxygen spaces should be followed, including all applicable Federal and State requirements.

ACTIVATED CARBON SERVICE
PH: 626-858-1888 FAX: 626-628-3716
WWW.PROMINENTINC.COM

PROMINENT SYSTEMS AQUASORB HP PRESSURE VESSEL ADSORBERS

Prominent Systems Low Pressure Liquid Phase Systems are manufactured and designed for a wide range of applications.

- Water filtration
- Groundwater remediation
- Bio-Remediation Contactor Units
- Oil and Grease Removal
- Pilot Study
- Spill Cleanup
- De-chlorination

Benefits and Features

- Available for Rental and Sale
- Optional: Automatic Pressure Relive Valves, Sample Ports, and Industrial Pressure Gauges
- Top and side manways for easy access and internal inspections during media exchange
- Optional: Skid mounted for easy mobilization and operations
- Optional: Connected with complete piping manifold for lead or lag configurations
- Heavy duty industrial epoxy lining for corrosion prevention

Turnkey Service, Installation, and Operation Parameters

Prominent Systems can provide a complete service package with includes turnkey filter media services .Prominent Systems performs on site media exchange service when the carbon is spent. The spent carbon will be removed and fresh carbon will be loaded on site after inspection of internals. Spent carbon is disposed according to state and federal regulations after profiling process. The change out frequency will base on several operating conditions such as VOC concentration, flow rates, operating temperature, and carbon type. Prominent Systems isotherm modeling can help to size the filters and estimate the GAC consumption and optimize your system to perform better.

PROMINENT SYSTEMS LP VESSELS	
	AQUASORB 2000
Outside Dimensions (Dia x Height)	48” x 8’5”
Inlet / Outlet[1] (I.D.)	4”
Footprint (Length x Width)	48” x 48”
Internal Screens	SCH 80 PVC
Interior Coating	Epoxy
Exterior Coating	Epoxy / Urethane
Empty Weight / Operating Weight (lbs.)	1,295/3,290
Approx. Carbon Bed Weight (lbs.)	2,000
Flow, GPM (max.)	100
Pressure, psig (max.)	75
Temperature, °F (max.)	140°

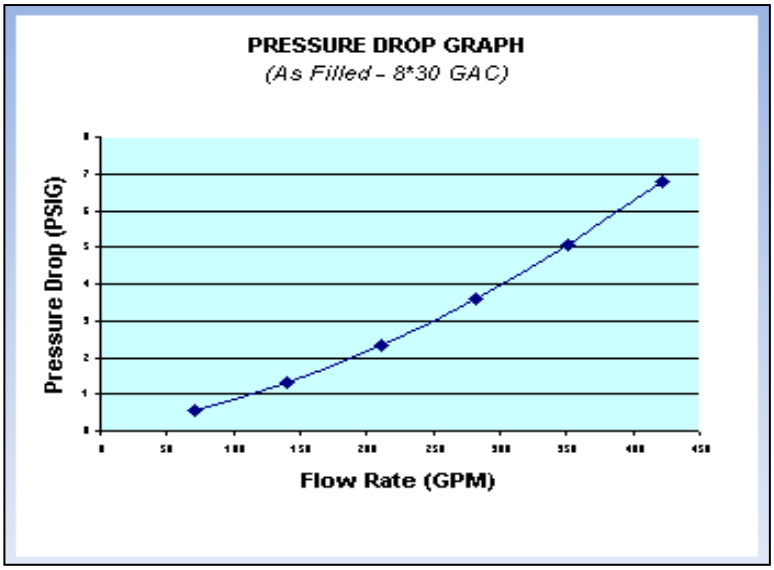

Safety Notice: In closed or partially closed containers and vessels, oxygen depletion may reach hazardous levels. The adsorption of organic compounds into activated carbon generates an exothermic reaction. If heat sources are not properly controlled, the carbon bed temperatures may rise and result in bed fires. In certain applications where the risk of ignition is significant, activated carbon might not be the suitable treatment method.

If workers are to enter a vessel containing carbon, appropriate sampling and work procedures for potentially low oxygen spaces should be followed, including all applicable Federal and State requirements.

ACTIVATED CARBON SERVICE
PH: 626-858-1888 FAX: 626-628-3716
WWW.PROMINENTINC.COM

Series 23 Lug

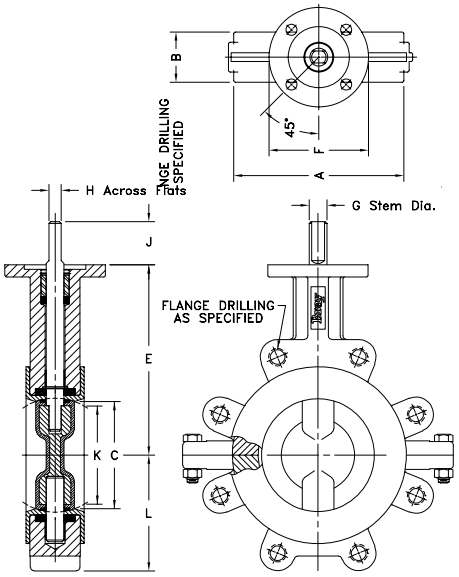

Series 22 Wafer

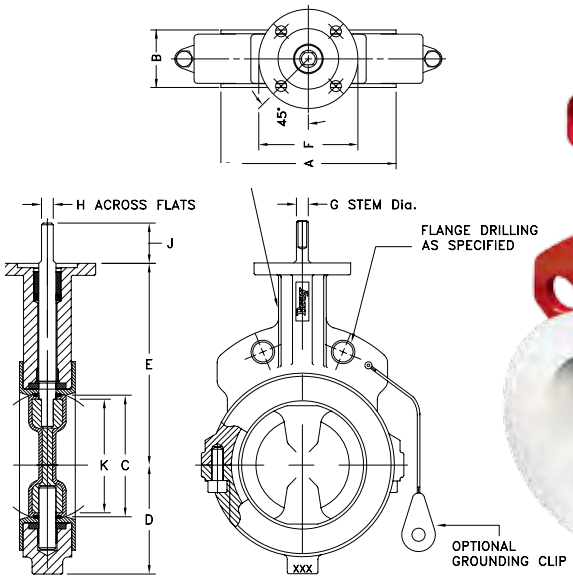

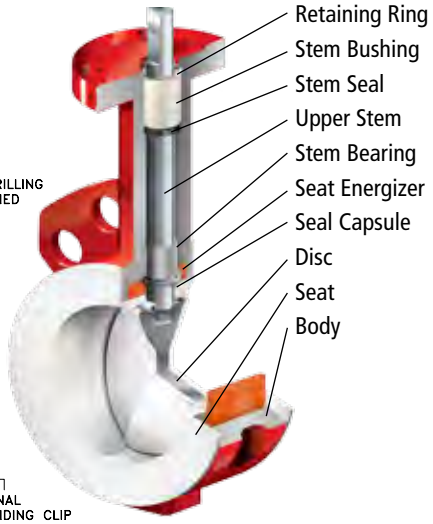

IMPERIAL DIMENSIONS: Inches																		Lug Bolting Data		
Valve Size	A	B	C	E	F	Top Plate Drilling			G	H	J	K	L		Adapter Code	Weight (lbs.)		Bolt Circle	No of Holes	Threads ISO Coarse
						BC	No of Holes	Hole Diameter					Wafer	Lug		Wafer	Lug			
2	3.88	1.69	2.00	5.50	3.54	2.76	4	.39	.55	.39	1.25	1.13	2.22	2.30	A	6.5	8.0	4.75	4	5/8-11
2 1/2	4.38	1.81	2.50	6.00	3.54	2.76	4	.39	.55	.39	1.25	1.77	2.47	2.57	A	7.5	10.0	5.50	4	5/8-11
3	5.00	1.81	3.00	6.25	3.54	2.76	4	.39	.55	.39	1.25	2.44	2.81	2.81	A	8.5	11.0	6.00	4	5/8-11
4	6.25	2.05	4.00	7.00	3.54	2.76	4	.39	.63	.43	1.25	3.48	3.56	4.09	B	13.5	17.5	7.50	8	5/8-11
5	7.38	2.20	5.00	7.50	3.54	2.76	4	.39	.75	.51	1.25	4.53	4.28	4.61	C	16.0	21.0	8.50	8	3/4-10
6	8.50	2.20	5.75	8.00	3.54	2.76	4	.39	.75	.51	1.25	5.35	4.78	5.06	C	20.5	28.5	9.50	8	3/4-10
8	10.62	2.36	7.75	9.50	5.91	4.92	4	.57	.87	.63	1.25	7.43	6.03	6.05	D	38.5	51.5	11.75	8	3/4-10
10	12.75	2.68	9.75	10.75	5.91	4.92	4	.57	1.18	.87	2.00	9.42	7.41	7.69	E	62.0	76.0	14.25	12	7/8-9
12	14.88	3.07	11.75	12.25	5.91	4.92	4	.57	1.18	.87	2.00	11.39	8.41	9.02	E	76.0	116.0	17.00	12	7/8-9

Note: K dimension is disc chordal dimension at valve face.

METRIC DIMENSIONS: Millimeters																		Lug Bolting Data		
Valve Size	A	B	C	E	F	Top Plate Drilling			G	H	J	K	L		Adapter Code	Weight (Kg)		Bolt Circle	No of Holes	Threads ISO Coarse
						BC	No of Holes	Hole Diameter					Wafer	Lug		Wafer	Lug			
50	98	43	51	140	90	70	4	10	14	10	32	29	56	58	A	3	3.5	121	4	5/8-11
65	111	46	64	152	90	70	4	10	14	10	32	45	63	63	A	3.5	4.5	140	4	5/8-11
80	127	46	76	159	90	70	4	10	14	10	32	62	71	71	A	4	5	152	4	5/8-11
100	159	52	102	178	90	70	4	10	16	11	32	88	90	104	B	6	8	191	8	5/8-11
125	187	56	127	190	90	70	4	10	19	13	32	115	109	117	C	7	10	216	8	3/4-10
150	216	56	146	203	90	70	4	10	19	13	32	136	121	129	C	9	13	241	8	3/4-10
200	270	60	197	241	150	125	4	14	22	16	32	189	153	155	D	17	23	298	8	3/4-10
250	324	68	248	273	150	125	4	14	30	22	51	239	188	195	E	28	34	362	12	7/8-9
300	378	78	298	311	150	125	4	14	30	22	51	289	214	229	E	34	53	432	12	7/8-9

Note: K dimension is disc chordal dimension at valve face.

Drawings are for reference only. Please refer to Bray ES drawings on the Bray website, www.bray.com. Bray reserves the right to change product dimensions without notice.

SR Drawing #22/23-2/12-im January - 2015

Inquire/P.O. No.:_____

Customer/Project: _____

Bray Order No.: _____

Series 22 Wafer

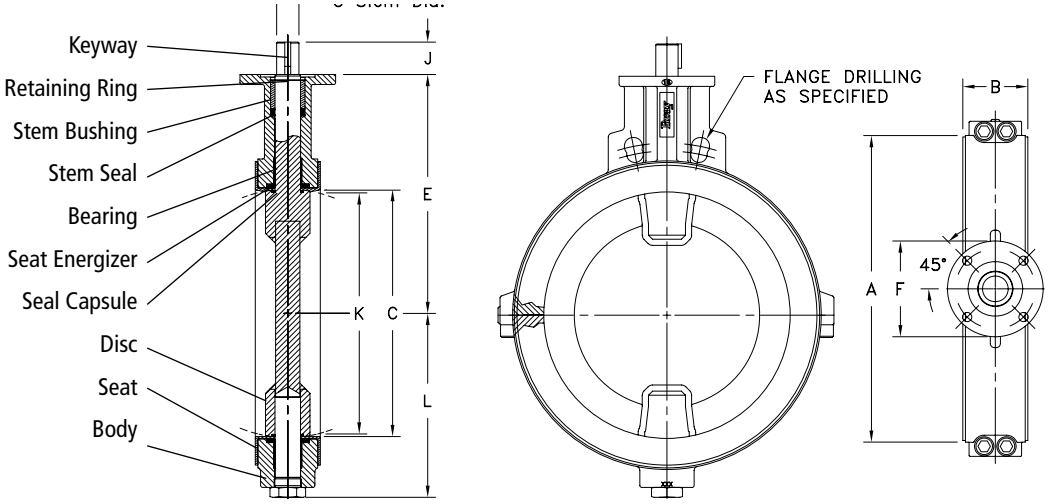

Series 23 Lug

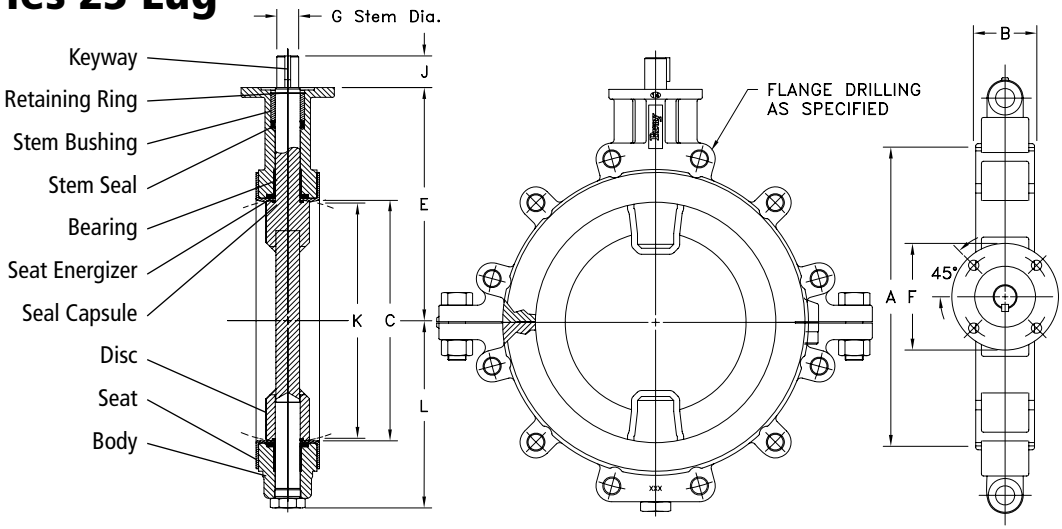

IMPERIAL DIMENSIONS: Inches																			Lug Bolting Data		
Valve Size	A	B	C	E	F	Top Plate Drilling			G	J	Key Size	K	L		Adapter Code	Weight (lbs.)			Bolt Circle	No of Holes	Threads ISO Coarse
						BC	No of Holes	Hole Diameter					Wafer	Lug		Wafer	Lug				
14	17.05	3.07	13.25	13.62	5.91	4.92	4	.57	1.38	2.00	.39x.39	13.00	10.02	10.02	F	125	148		18.75	12	1.00-8
16	19.21	4.02	15.25	14.75	5.91	4.92	4	.57	1.38	2.00	.39x.39	14.75	11.99	11.99	F	180	218		21.25	16	1.00-8
18	21.12	4.49	17.25	16.00	8.27	6.50	4	.81	1.97	2.50	.39x.47	16.65	13.94	13.94	G	240	273		22.75	16	1.13-7
20	23.25	5.00	19.25	17.25	8.27	6.50	4	.81	1.97	2.50	.39x.47	18.73	14.94	14.94	G	320	368		25.00	20	1.13-7

Note: K dimension is disc chordal dimension at valve face.

METRIC DIMENSIONS: Millimeters																			Lug Bolting Data		
Valve Size	A	B	C	E	F	Top Plate Drilling			G	J	Key Size	K	L		Adapter Code	Weight (Kg)			Bolt Circle	No of Holes	Threads ISO Coarse
						BC	No of Holes	Hole Diameter					Wafer	Lug		Wafer	Lug				
350	433	78	337	346	150	125	4	14	35	51	10x10	330	255	255	F	57	67		476	12	1.00-8
400	488	102	387	375	150	125	4	14	35	51	10x10	375	305	305	F	82	99		540	16	1.00-8
450	536	114	438	406	210	165	4	21	50	64	10x12	423	354	354	G	109	124		578	16	1.13-7
500	591	127	489	438	210	165	4	21	50	64	10x12	476	379	379	G	145	167		635	20	1.13-7

Note: K dimension is disc chordal dimension at valve face.

Drawings are for reference only. Please refer to Bray ES drawings on the Bray website, www.bray.com. Bray reserves the right to change product dimensions without notice.

SR Drawing #22/23-14/20-im January - 2015

Inquire/P.O. No.:_____

Customer/Project: _____

Bray Order No.: _____

PED 97/23/EC COMPLIANT
See page 55 for Details

UNIVERSAL LOW PRESSURE

The **Universal Low Pressure (U3, UR)** check valve is a one piece body machined from bar stock and is designed for minimum pressure drop. The valve has a light-weight, compact design that provides maintenance-free, dependable service. NPT threads are per ASME B1.20.1. Also available with ISO 7 "Rp" threads. (UR). These valves can also be used as a low pressure relief valve or vacuum breaker by using the desired spring settings.

NOTE: Many valves in this series can be supplied with B16.34 certification. Consult the factory for more information.

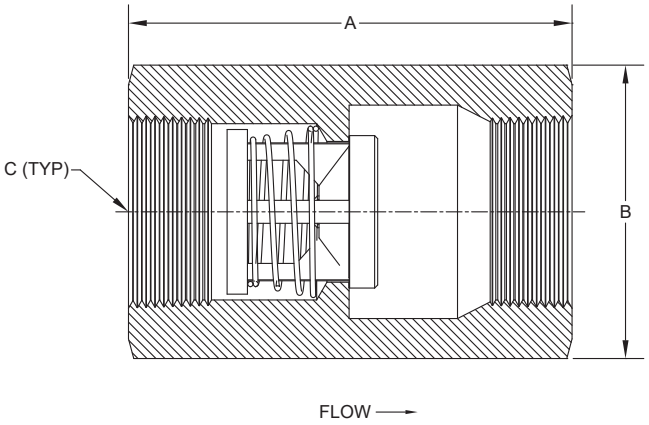

Nom. Pipe Size	Size Code	A	Hex ❶ Size B	C	Orifice Diameter
3/8	C	2.16	13/16	3/8 NPT	0.348
1/2	D	2.71	1-1/8	1/2 NPT	0.464
3/4	F	2.95	1-1/4	3/4 NPT	0.593
1	H	3.64	1-5/8	1 NPT	0.890
1-1/4	I	3.91	2-1/4	1-1/4 NPT	1.135
1-1/2	J	4.36	2-1/2	1-1/2 NPT	1.385
2	K	5.85	3	2 NPT	1.555
2-1/2	L	5.50	3-3/4	2-1/2 NPT	1.555
3	M	6.25	4-1/2	3 NPT	2.025
4	N	7.13	5-1/2	4 NPT	2.560

❶May be larger and/or round.

Body Material ❷	Availability	Non-Shock Pressure-Temperature Rating	
316 Stainless Steel (SS)	Standard	3/8" - 3" 3000 PSIG @ 100°F (1500 PSIG for o-ring seats)	4" 1500 PSIG @ 100°F
Carbon Steel (CS)			
Brass (BR)			
Alloy 20 (A2)	Semi-standard		
Alloy C-276 (HC)			
Alloy 400 or Monel ® (MO)			
Alloy B (HB)	Contact the factory for these or other materials		
Titanium (TI)			

❷See page 54 for material grade information.

Universal Low Pressure
For Water at 72°F

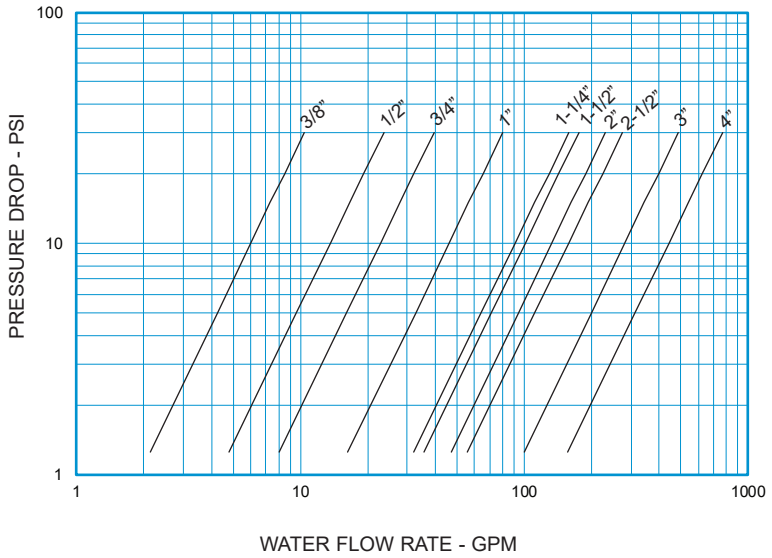

Note: All flow curves and Cv values presume the valves are fully open with 1/2 PSI cracking pressure springs. Consult the factory for more information.

STYLE U3 C_V VALUES & VALVE WEIGHTS			
C_V	SIZE	SS & CS ALLOYS	BRASS
1.9	3/8	3.0 oz.	3.3 oz.
4.3	1/2	8.5 oz.	9.1 oz.
7.2	3/4	9.6 oz.	10.1 oz.
14.6	1	1.2 lb.	1.3 lb.
28.8	1-1/4	2.9 lb.	3.2 lb.
31.9	1-1/2	3.6 lb.	3.9 lb.
42.0	2	6.5 lb.	7.2 lb.
50.0	2-1/2	9.2 lb.	10 lb.
89.0	3	14.3 lb.	15.5 lb.
140	4	21.7 lb.	23.9 lb.

See page 49 for Flow Formulae.
Valve weights are approximate.

HOW TO ORDER
CHECK-ALL STYLE U3

BODY MATERIAL
ALLOY 20 = A2
BRASS = BR
CARBON STEEL = CS
ALLOY B = HB
ALLOY C-276 = HC
ALLOY 400 OR MONEL® = MO
316 SS = SS
TITANIUM = TI
See p. 3 for temperature rating

SPRING CRACKING PRESSURES (PSI)
Must use decimal as a character unless selecting NO SPRING. *Specify Exact Setting*

SPRING RANGES		EXAMPLE
.000 TO .999	=	.500
1.00 TO 9.99	=	1.50
10.0 TO 85.0	=	15.0
NO SPRING	=	NOSPRG

STANDARD CRACKING PRESSURES ❶
.125 .500 1.50 3.50
(Sizes C-I Only)

Note: Many other cracking pressures are available. All spring tolerances +/- 15%.

SPECIAL OPTIONS
T = FEP ENCAPSULATED SPRING
See p. 4 for temperature rating
Contact the factory for more options

U

VALVE STYLE
NPT Threads = U3
ISO 7 Rp Threads = UR

SIZE
3/8 = C
1/2 = D
3/4 = F
1 = H
1-1/4 = I
1-1/2 = J
2 = K
2-1/2 = L
3 = M
4 = N

SEAT MATERIAL ❷
AFLAS® = AS
BUNA-N = BN
EPDM ❸ = EP
KALREZ® = KZ
"METAL-TO-METAL" = MT
NEOPRENE = NE
PTFE = TF
VITON® = VT
See p. 3 for temperature ratings

SPRING MATERIAL
316 SS = SS
ALLOY C-276 = HC
ALLOY B = HB
ALLOY X750 OR INCONEL® X750 = IX
ALLOY 400 OR MONEL® = MO
17-7PH SS = PH
TITANIUM = TI
See p. 4 for temperature ratings

Listed above are the most common material selections. Please contact the factory for additional options.

❶.500 PSI is the only standard cracking pressure for spring materials other than Stainless Steel. .125 PSI springs are not recommended for installations with flow vertical down.

❷Seat materials other than "metal-to-metal" have a maximum pressure rating of 1500 PSI. "Metal-to-Metal" and PTFE seats are not resilient. See page 50 for allowable leakage rates.

❸EP seats not recommended for use with Carbon Steel valves.

Trademarks Used
AFLAS® AGC Chemicals Americas, Inc.
MONEL® Special Metals Family of Companies
INCONEL® Special Metals Family of Companies
VITON® E.I. du Pont de Nemours and Company
KALREZ® E.I. du Pont de Nemours and Company

PED 97/23/EC COMPLIANT
See Page 55 for Details

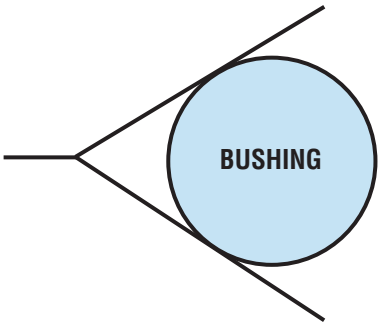

The **Bushing (BU, BR)** valve is a check valve with a standard bushing housing. The valve is adaptable to many types of service applications. It has very little restriction and produces a low pressure drop. It can be used quite effectively in systems where flow and pressure drop are critical by the use of a reducer coupling. The BU valve can also be used as a low pressure relief valve or vacuum breaker by using the desired spring settings.

The bushing thread sizes are designated by two sets of numbers; the first being the male thread, the second the female thread. NPT threads are per ASME B1.20.1. Also available with ISO 7 "R" (R male x Rp female) threads (BR).

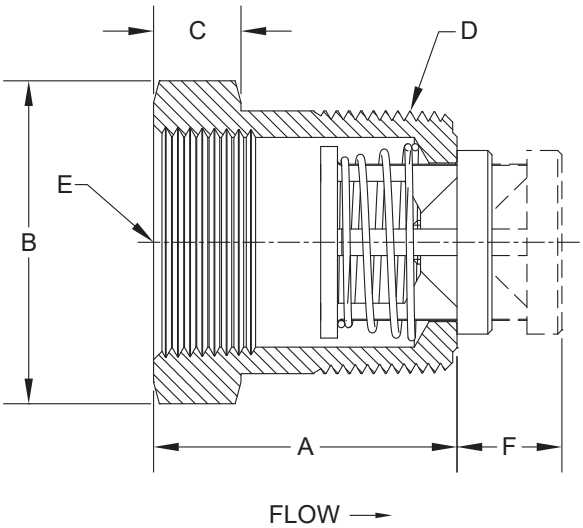

Nom. Pipe Size	Size Code	A	Hex ❶ Size B	C	D	E	F ❷	Orifice Dia.
1/2 x 3/8	D	1.30	7/8	1/4	1/2 NPT	3/8 NPT	0.53	0.348
3/4 x 1/2	F	1.30	1-1/8	1/4	3/4 NPT	1/2 NPT	0.61	0.464
1 x 3/4	H	1.83	1-3/8	1/2	1 NPT	3/4 NPT	0.78	0.593
1-1/4 x 1	I	1.83	1-3/4	1/2	1-1/4 NPT	1 NPT	0.85	0.890
1-1/2 x 1-1/4	J	2.17	2	5/8	1-1/2 NPT	1-1/4 NPT	1.01	1.135
2 x 1-1/2	K	2.17	2-1/2	5/8	2 NPT	1-1/2 NPT	1.19	1.385
2-1/2 x 2	L	2.53	3	5/8	2-1/2 NPT	2 NPT	1.43	1.555
3 x 2-1/2	M	3.09	3-1/2	1	3 NPT	2-1/2 NPT	1.59	2.025

❶ May be larger and/or round.
❷ Maximum nominal dimension for a fully open valve with no spring.

Body Material ❸	Availability	Non-Shock Pressure-Temperature Rating
316 Stainless Steel (SS)	Standard	3000 PSIG @ 100°F (1500 PSIG for o-ring seats)
Carbon Steel (CS)		
Brass (BR)		
Alloy 20 (A2)	Semi-standard	
Alloy C-276 (HC)		
Alloy 400 or Monel ® (MO)		
Alloy B (HB)	Contact the factory for these or other materials	
Titanium (TI)		

❸ See page 53 for material grade information.

Bushing
For Water at 72°F

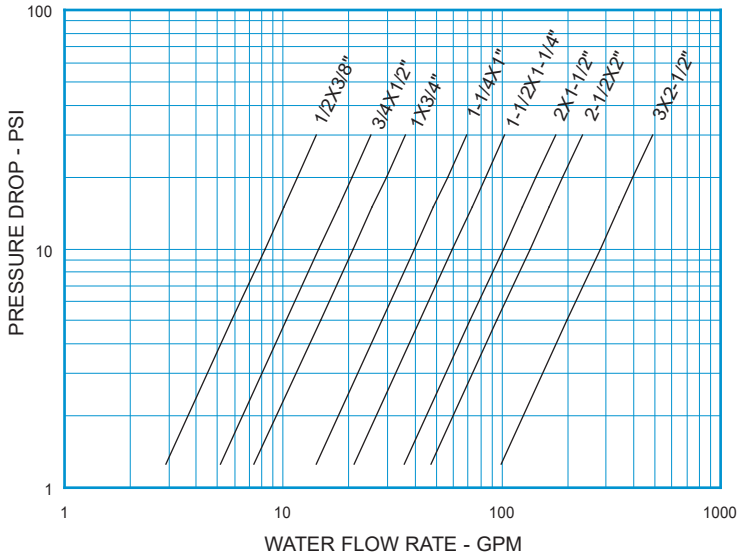

Note: All flow curves and Cv values presume the valves are fully open with 1/2 PSI cracking pressure springs. Consult the factory for more information.

STYLE BU C_V VALUES & VALVE WEIGHTS		
C_V	SIZE	ALL MATL
2.6	1/2 x 3/8	1.7 oz.
4.6	3/4 x 1/2	2.9 oz.
6.6	1 x 3/4	6.4 oz.
12.6	1-1/4 x 1	10.8 oz.
18.8	1-1/2 x 1-1/4	13.8 oz.
32.0	2 x 1-1/2	1.6 lb.
42.5	2-1/2 x 2	2.3 lb.
89.0	3 x 2-1/2	5.4 lb.

See page 49 for Flow Formulae.
Valve weights are approximate.

HOW TO ORDER
CHECK-ALL STYLE BU

BODY MATERIAL
ALLOY 20 = A2
BRASS = BR
CARBON STEEL = CS
ALLOY B = HB
ALLOY C-276 = HC
ALLOY 400 OR MONEL® = MO
316 SS = SS
TITANIUM = TI
See p. 3 for temperature ratings

SPRING CRACKING PRESSURES (PSI)
Must use decimal as a character unless selecting NO SPRING. *Specify Exact Setting*

SPRING RANGES		EXAMPLE
.000 TO .999	=	.500
1.00 TO 9.99	=	1.50
10.0 TO 85.0	=	15.0
NO SPRING	=	NOSPRG

STANDARD CRACKING PRESSURES ❶
.125 .500 1.50 3.50
(Sizes D-J Only)

Note: Many other cracking pressures are available. All spring tolerances +/- 15%.

SPECIAL OPTIONS
T = FEP ENCAPSULATED SPRING
See p. 4 for temperature ratings
Contact the factory for more options

B

VALVE STYLE
NPT Threads = BU
ISO 7 R & Rp Threads = BR

SIZE
1/2 x 3/8 = D
3/4 x 1/2 = F
1 x 3/4 = H
1-1/4 x 1 = I
1-1/2 x 1-1/4 = J
2 x 1-1/2 = K
2-1/2 x 2 = L
3 x 2-1/2 = M

SEAT MATERIAL ❷
AFLAS® = AS
BUNA-N = BN
EPDM ❸ = EP
KALREZ® = KZ
"METAL-TO-METAL" = MT
NEOPRENE = NE
PTFE = TF
VITON® = VT
See p. 3 for temperature ratings

SPRING MATERIAL
ALLOY C-276 = HC
ALLOY X750 OR INCONEL® X750 = IX
ALLOY 400 OR MONEL® = MO
17-7PH SS = PH
316 SS = SS
TITANIUM = TI
See p. 4 for temperature ratings

Listed above are the most common material selections. Please contact the factory for additional options.

❶.500 PSI is the only standard cracking pressure for spring materials other than Stainless Steel. .125 PSI springs are not recommended for installations with flow vertical down.

❷Seat materials other than "metal-to-metal" have a maximum pressure rating of 1500 PSI. "Metal-to-Metal" and PTFE seats are not resilient. See page 50 for allowable leakage rates.

❸EP seats not recommended for use with Carbon Steel valves.

Trademarks Used
AFLAS® AGC Chemicals Americas, Inc.
MONEL® Special Metals Family of Companies
INCONEL® Special Metals Family of Companies
VITON® E.I. du Pont de Nemours and Company
KALREZ® E.I. du Pont de Nemours and Company

Quick Start Guide
00825-0300-4750, Rev CA
March 2016

Rosemount™ 8750W Magnetic Flowmeter System

for Utility, Water, and Wastewater Applications

EMERSON™
Process Management

NOTICE

This document provides basic installation guidelines for the Rosemount 8750W Magnetic Flowmeter Platform. For comprehensive instructions for detailed configuration, diagnostics, maintenance, service, installation, or troubleshooting refer to the Rosemount 8750W Reference Manual (document number 00809-0300-4750). The manual and Quick Start Guide are also available electronically on EmersonProcess.com/Rosemount.

⚠ WARNING

Failure to follow these installation guidelines could result in death or serious injury.

- Installation and servicing instructions are for use by qualified personnel only. Do not perform any servicing other than that contained in the operating instructions, unless qualified.
- Verify the installation is done safely and is consistent with the operating environment.
- Ensure the device certification and installation techniques are suitable for the installation environment.
- Explosion hazard. Do not disconnect equipment when a flammable or combustible atmosphere is present.
- To prevent ignition of flammable or combustible atmospheres, disconnect power before servicing circuits.
- Do not connect a Rosemount 8750W Transmitter to a non-Rosemount sensor that is located in an explosive atmosphere.
- Follow national, local, and plant standards to properly earth ground the transmitter and sensor. The earth ground must be separate from the process reference ground.
- Rosemount Magnetic Flowmeters ordered with non-standard paint options or non-metallic labels may be subject to electrostatic discharge. To avoid electrostatic charge build-up, do not rub the flowmeter with a dry cloth or clean with solvents.

NOTICE

- The sensor liner is vulnerable to handling damage. Never place anything through the sensor for the purpose of lifting or gaining leverage. Liner damage may render the sensor inoperable.
- Metallic or spiral-wound gaskets should not be used as they will damage the liner face of the sensor. If frequent removal is anticipated, take precautions to protect the liner ends. Short spool pieces attached to the sensor ends are often used for protection.
- Correct flange bolt tightening is crucial for proper sensor operation and life. All bolts must be tightened in the proper sequence to the specified torque specifications. Failure to observe these instructions could result in severe damage to the sensor lining and possible sensor replacement.
- In cases where high voltage/high current are present near the meter installation, ensure proper protection methods are followed to prevent stray voltage/current from passing through the meter. Failure to adequately protect the meter could result in damage to the transmitter and lead to meter failure.
- Completely remove all electrical connections from both sensor and transmitter prior to welding on the pipe. For maximum protection of the sensor, consider removing it from the pipeline.

Contents

Transmitter installation 3
Handling and lifting 8
Mounting 9
Sensor installation 11
Process reference connection 16
Wiring the transmitter 18
Basic configuration 31
Product Certifications 36
Installation and wiring drawings 48

1.0 Transmitter installation

Installation of the Rosemount Magnetic Flowmeter Transmitter includes both detailed mechanical and electrical installation procedures.

Before installing the Rosemount 8750W, there are several pre-installation steps that should be completed to make the installation process easier:

- Identify the options and configurations that apply to your application.
- Set the hardware switches if necessary.
- Consider mechanical, electrical, and environmental requirements.

1.1 Identify options and configurations

The typical installation of the Rosemount 8750W includes a device power connection, a 4–20mA output connection, and sensor coil and electrode connections. Other applications may require one or more of the following configurations or options:

- Pulse output
- Discrete input/discrete output
- HART® Multidrop Configuration

Hardware switches

The Rosemount 8750W electronics stack is equipped with user-selectable hardware switches. These switches set the Alarm mode, Internal/external analog power, Internal/external pulse power(1), and Transmitter security. The standard configuration for these switches when shipped from the factory are as follows:

Table 1. Standard Switch Configuration

Setting	Standard switch configuration
Alarm mode	High
Internal/external analog power	Internal
Internal/external pulse power(1)	External
Transmitter security	Off

In most cases, it will not be necessary to change the setting of the hardware switches. If the switch settings need to be changed, follow the steps outlined in the “Changing hardware switch settings” section of the Rosemount 8750W Reference Manual.

NOTICE

To prevent switch damage, use a non-metallic tool to move switch positions.

Be sure to identify any additional options and configurations that apply to the installation. Keep a list of these options for consideration during the installation and configuration procedures.

1. *Rosemount 8750W Field Mount Transmitter only.*

1.2 Mechanical considerations

The mounting site for the Rosemount 8750W should provide enough room for secure mounting, easy access to conduit entries, full opening of the transmitter covers, and easy readability of the LOI screen if equipped.

For remote field mount transmitter installations, a mounting bracket is provided for use on a 2-in. pipe or a flat surface (see Figure 1).

NOTICE

If the transmitter is mounted separately from the sensor, it may not be subject to limitations that might apply to the sensor.

Rotate integral mount transmitter housing

The transmitter housing can be rotated on the sensor in 90° increments by removing the four mounting screws on the bottom of the housing. Do not rotate the housing more than 180° in any one direction. Prior to tightening, be sure the mating surfaces are clean, the O-ring is seated in the groove, and there is no gap between the housing and the sensor.

Figure 1. Rosemount 8750W Field Mount Transmitter

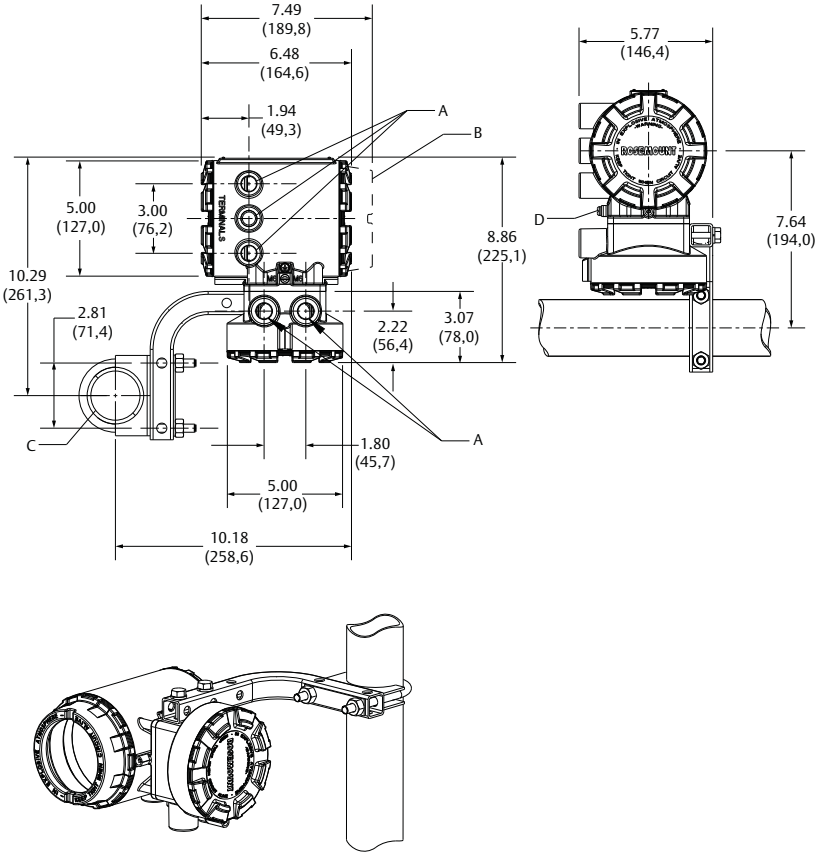

A. 1/2-in.–14 NPT conduit entry
B. LOI cover
C. 2-in. pipe bracket
D. Ground lug

Dimensions are in inches (millimeters).

Figure 2. Rosemount 8750W Integral Field Mount Transmitter

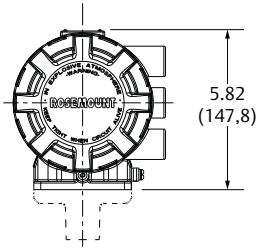

Figure 3. Rosemount 8750W Wall Mount Transmitter with Standard Cover

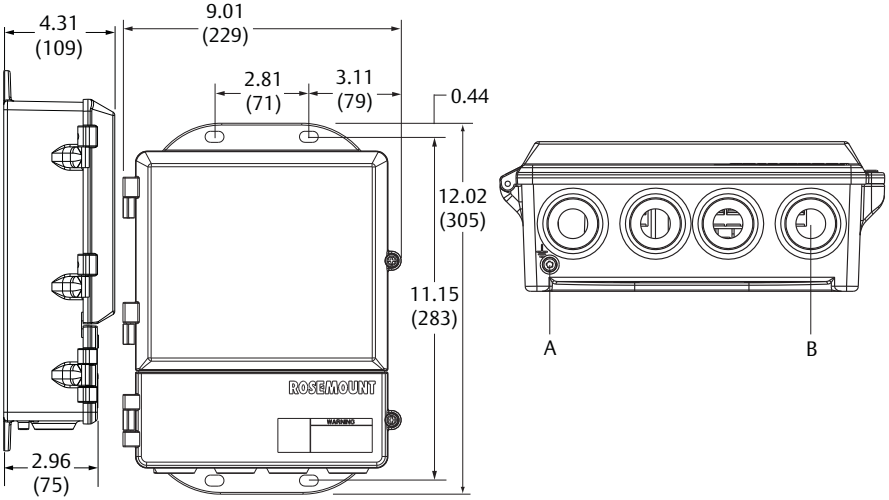

A. Ground lug
B. 1/2-in.–14 NPT or M20 conduit entry

Dimensions in inches (millimeters).

Figure 4. Rosemount 8750W Wall Mount Transmitter with LOI Cover

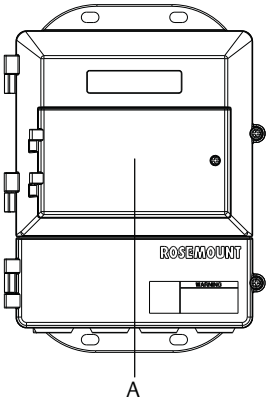

A. LOI keypad cover

NOTICE

Default conduit entries are 1/2-in. NPT. If an alternate thread connection is required, thread adapters must be used.

1.3 Electrical considerations

Before making any electrical connections to the Rosemount 8750W, consider national, local and plant electrical installation requirements. Be sure to have the proper power supply, conduit, and other accessories necessary to comply with these standards.

Both remotely and integrally mounted transmitters require external power so there must be access to a suitable power source.

Table 2. Electrical Data

Field mount transmitter	
Power input	90–250VAC, 0.45A, 40VA 12–42VDC, 1.2A, 15W
Pulsed circuit	Internally powered (Active): Outputs up to 12VDC, 12.1mA, 73mW Externally powered (Passive): Input up to 28VDC, 100mA, 1W
4-20mA output circuit	Internally Powered (Active): Outputs up to 25mA, 24VDC, 600mW Externally Powered (Passive): Input up to 25mA, 30VDC, 750mW
Coil excitation output	500mA, 40V max, 9W max
Wall mount transmitter	
Power input	90–250VAC, 0.28A, 40VA 12–42VDC, 1A, 15W
Pulsed circuit	Externally powered (Passive): 5–24VDC, up to 2W
4-20mA output circuit	Internally powered (Active): Outputs up to 25mA, 30VDC Externally powered (Passive): Input up to 25mA, 10–30VDC
Coil excitation output	500mA, 40V max, 9W max
Sensor[1]	
Coil excitation input	500mA, 40V max, 20W max
Electrode circuit	5V, 200uA, 1mW

1. Provided by the transmitter.

1.4 Environmental considerations

To ensure maximum transmitter life, avoid extreme temperatures and excessive vibration. Typical problem areas:

- high-vibration lines with integrally mounted transmitters
- tropical/desert installations in direct sunlight
- outdoor installations in arctic climates

Remote-mounted transmitters may be installed in the control room to protect the electronics from the harsh environment and to provide easy access for configuration or service.

2.0 Handling and lifting

- Handle all parts carefully to prevent damage. Whenever possible, transport the system to the installation site in the original shipping container.
- PTFE-lined sensors are shipped with end covers that protect it from both mechanical damage and normal unrestrained distortion. Remove the end covers just before installation.
- Keep the shipping plugs in the conduit connections until you are ready to connect and seal them.
- The sensor should be supported by the pipeline. Pipe supports are recommended on both the inlet and outlet sides of the sensor pipeline. There should be no additional support attached to the sensor.
- Additional safety recommendations for mechanical handling:
  - Use proper PPE (Personal Protection Equipment should include safety glasses and steel toed shoes).
  - Do not drop the device from any height.
- Do not lift the meter by holding the electronics housing or junction box.The sensor liner is vulnerable to handling damage. Never place anything through the sensor for the purpose of lifting or gaining leverage. Liner damage can render the sensor useless.
- If provided, use the lifting lugs on each flange to handle the Magnetic Flowmeter when it is transported and lowered into place at the installation site. If lifting lugs are not provided, the Magnetic Flowmeter must be supported with a lifting sling on each side of the housing.
  - Flanged sensors 3-in. through 48-in. come with lifting lugs.
  - Wafer sensors do not come with lifting lugs.

Figure 5. Support for Handling and Lifting

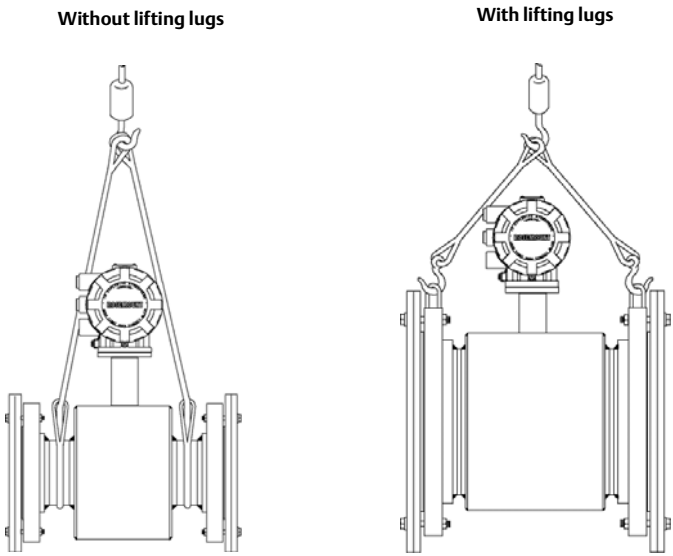

3.0 Mounting

3.1 Upstream/downstream piping

To ensure specified accuracy over widely varying process conditions, install the sensor with a minimum of five straight pipe diameters upstream and two pipe diameters downstream from the electrode plane (see Figure 6).

Figure 6. Upstream and Downstream Straight Pipe Diameters

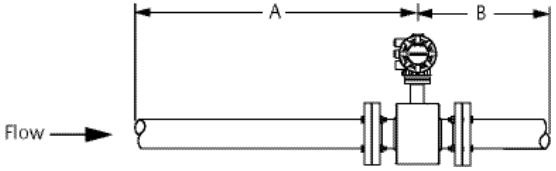

A. Five pipe diameters
B. Two pipe diameters

Installations with reduced upstream and downstream straight runs are possible. In reduced straight run installations, the meter may not meet absolute accuracy specifications. Reported flow rates will still be highly repeatable.

3.2 Flow direction

The sensor should be mounted so the arrow points in the direction of flow. See Figure 7.

Figure 7. Flow Direction Arrow

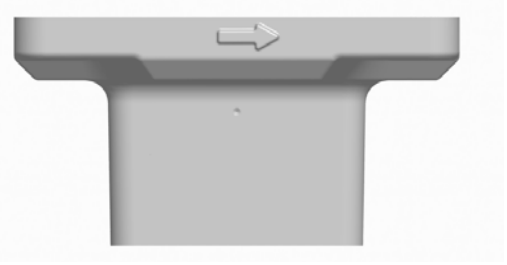

3.3 Sensor location

The sensor should be installed in a location that ensures it remains full during operation. Vertical installation with upward process fluid flow keeps the cross-sectional area full, regardless of flow rate. Horizontal installation should be restricted to low piping sections that are normally full.

Figure 8. Sensor Orientation

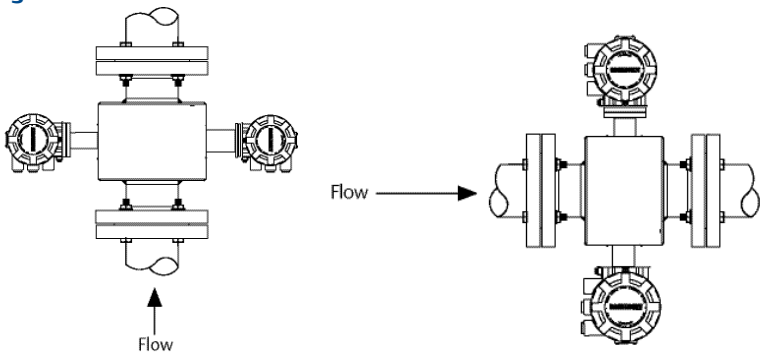

3.4 Electrode orientation

The electrodes in the sensor are properly oriented when the two measurement electrodes are in the 3 and 9 o'clock positions or within 45° from the horizontal, as shown on the left of Figure 9. Avoid any mounting orientation that positions the top of the sensor at 90° from the vertical position as shown on the right of Figure 9.

Figure 9. Mounting Position

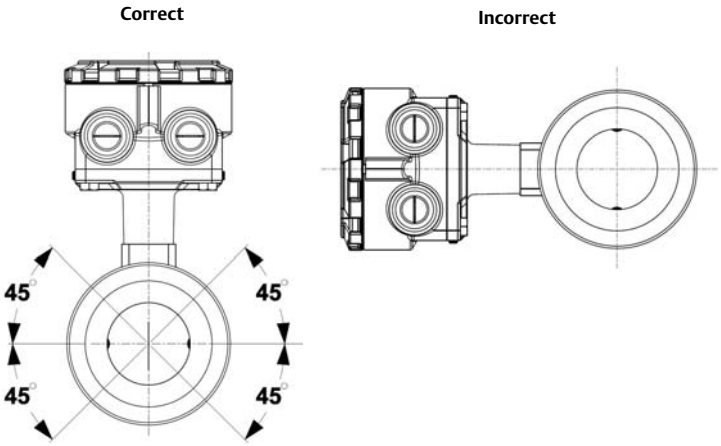

4.0 Sensor installation

4.1 Gaskets

The sensor requires a gasket at each process connection. The gasket material must be compatible with the process fluid and operating conditions. Gaskets are required on each side of a grounding ring (see Figure 10). All other applications (including sensors or a grounding electrode) require only one gasket on each process connection.

NOTICE

Metallic or spiral-wound gaskets should not be used as they will damage the liner face of the sensor.

Figure 10. Flanged Gasket Placement

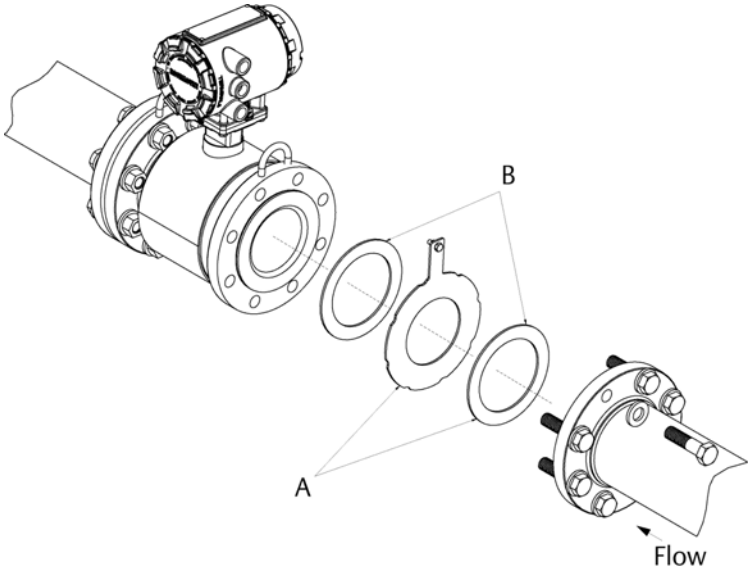

A. Grounding ring and gasket (optional)
B. Customer-supplied gasket

4.2 Flange bolts

Note

Do not bolt one side at a time. Tighten both sides simultaneously. Example:
1. Snug upstream.
2. Snug downstream.
3. Tighten upstream.
4. Tighten downstream.

Do not snug and tighten the upstream side and then snug and tighten the downstream side. Failure to alternate between the upstream and downstream flanges when tightening bolts may result in liner damage.

Suggested torque values by sensor line size and liner type are listed in Table 4 for ASME B16.5 flanges, Table 5 for EN flanges, and Table 6 and Table 7 for AWWA and EN flanges for line sizes 30-in. (750 mm) to 48-in. (1300 mm). Consult your local Emerson™ Process Management representative if the flange rating of the sensor is not listed. Tighten flange bolts on the upstream side of the sensor in the incremental sequence shown in Figure 11 to 20 percent of the suggested torque values. Repeat the process on the downstream side of the sensor. For sensors with more or less flange bolts, tighten the bolts in a similar crosswise sequence. Repeat this entire tightening sequence at 40, 60, 80, and 100% of the suggested torque values.

If leakage occurs at the suggested torque values, the bolts can be tightened in additional 10% increments until the joint stops leaking, or until the measured torque value reaches the maximum torque value of the bolts. Practical consideration for the integrity of the liner often leads the user to distinct torque values to stop leakage due to the unique combinations of flanges, bolts, gaskets, and sensor liner material.

Check for leaks at the flanges after tightening the bolts. Failure to use the correct tightening methods can result in severe damage. While under pressure, sensor materials may deform over time and require a second tightening 24 hours after the initial installation.

Figure 11. Flange Bolt Torquing Sequence

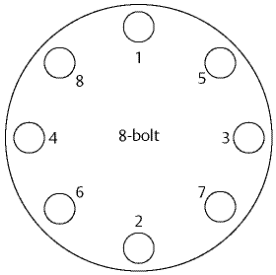

Prior to installation, identify the lining material of the flow sensor to ensure the suggested torque values are applied.

Table 3. Lining Material

Fluoropolymer liners	Resilient liners
T - PTFE	P - Polyurethane
	N - Neoprene

Table 4. Flange Bolt Torque and Load Specifications for 8750W (ASME)

Size code	Line size	Fluoropolymer liners		Resilient liners	
		Class 150 (pound-feet)	Class 300 (pound-feet)	Class 150 (pound-feet)	Class 300 (pound-feet)
005	0.5-in. (15 mm)	8	8	N/A	N/A
010	1-in. (25 mm)	8	12	N/A	N/A
015	1.5-in. (40 mm)	13	25	7	18
020	2-in. (50 mm)	19	17	14	11
025	2.5-in. (65 mm)	22	24	17	16
030	3-in. (80 mm)	34	35	23	23
040	4-in. (100 mm)	26	50	17	32
050	5-in. (125 mm)	36	60	25	35
060	6-in. (150 mm)	45	50	30	37
080	8-in. (200 mm)	60	82	42	55
100	10-in. (250 mm)	55	80	40	70
120	12-in. (300 mm)	65	125	55	105
140	14-in. (350 mm)	85	110	70	95
160	16-in. (400 mm)	85	160	65	140
180	18-in. (450 mm)	120	170	95	150
200	20-in. (500 mm)	110	175	90	150
240	24-in. (600 mm)	165	280	140	250

Table 5. Flange Bolt Torque and Load Specifications for 8750W (EN 1092-1)

Size code	Line size	Fluoropolymer liners			
		PN10 (Newton-meter)	PN 16 (Newton-meter)	PN 25 (Newton-meter)	PN 40 (Newton-meter)
005	0.5-in. (15 mm)	N/A	N/A	N/A	10
010	1-in. (25 mm)	N/A	N/A	N/A	20
015	1.5-in. (40 mm)	N/A	N/A	N/A	50
020	2-in. (50 mm)	N/A	N/A	N/A	60
025	2.5-in. (65 mm)	N/A	N/A	N/A	50
030	3-in. (80 mm)	N/A	N/A	N/A	50
040	4-in. (100 mm)	N/A	50	N/A	70
050	5-in. (125 mm)	N/A	70	N/A	100
060	6-in. (150mm)	N/A	90	N/A	130
080	8-in. (200 mm)	130	90	130	170
100	10-in. (250 mm)	100	130	190	250
120	12-in. (300 mm)	120	170	190	270
140	14-in. (350 mm)	160	220	320	410
160	16-in. (400 mm)	220	280	410	610
180	18-in. (450 mm)	190	340	330	420
200	20-in. (500 mm)	230	380	440	520
240	24-in. (600 mm)	290	570	590	850
Size code	**Line size**	**Resilient liners**			
		PN 10 (Newton-meter)	**PN 16 (Newton-meter)**	**PN 25 (Newton-meter)**	**PN 40 (Newton-meter)**
010	1-in. (25 mm)	N/A	N/A	N/A	20
015	1.5-in. (40 mm)	N/A	N/A	N/A	30
020	2-in. (50 mm)	N/A	N/A	N/A	40
025	2.5-in. (65 mm)	N/A	N/A	N/A	35
030	3-in. (80 mm)	N/A	N/A	N/A	30
040	4-in. (100 mm)	N/A	40	N/A	50
050	5-in. (125 mm)	N/A	50	N/A	70
060	6-in. (150 mm)	N/A	60	N/A	90
080	8-in. (200 mm)	90	60	90	110
100	10-in. (250 mm)	70	80	130	170
120	12-in. (300 mm)	80	110	130	180
140	14-in. (350 mm)	110	150	210	280
160	16-in. (400 mm)	150	190	280	410
180	18-in. (450 mm)	130	230	220	280
200	20-in. (500 mm)	150	260	300	350
240	24-in. (600 mm)	200	380	390	560

Table 6. Flange Bolt Torque and Load Specifications for Rosemount 8750W Larger Line Sizes (AWWA C207)

Size code	Line size	Fluoropolymer liners		
		Class D (pound-feet)	Class E (pound-feet)	Class F (pound-feet)
300	30-in. (750 mm)	195	195	195
360	36-in. (900 mm)	280	280	280
		Resilient liners		
300	30-in. (750 mm)	165	165	165
360	36-in. (900 mm)	245	245	245
400	40-in. (1000 mm)	757	757	N/A
420	42-in. (1050 mm)	839	839	N/A
480	48-in. (1200 mm)	872	872	N/A

Table 7. Flange Bolt Torque and Load Specifications for Rosemount 8750W Larger Line Sizes (EN 1092-1)

Size code	Line size	Fluoropolymer liners		
		PN6 (Newton-meter)	PN10 (Newton-meter)	PN16 (Newton-meter)
360	36-in. (900 mm)	N/A	264	264
		Resilient liners		
360	36-in. (900 mm)	N/A	264	264
400	40-in. (1000 mm)	208	413	478
480	48-in. (1200 mm)	375	622	N/A

5.0 Process reference connection

Figure 12 through Figure 15 illustrate process reference connections only. Earth safety ground is also required as part of the installation but is not shown in the figures. Follow national, local, and plant electrical codes for safety ground.

Use Table 8 to determine which process reference option to follow for proper installation.

Table 8. Process reference installation

Process reference options			
Type of pipe	**Grounding straps**	**Grounding rings**	**Reference electrode**
Conductive unlined pipe	See Figure 12	See Figure 13(1)	See Figure 15(1)
Conductive lined pipe	Insufficient grounding	See Figure 13	See Figure 12
Non-conductive pipe	Insufficient grounding	See Figure 14	Not recommended

1. Grounding ring and reference electrode are not required for process reference. Grounding straps per Figure 12 are sufficient.

Note
For line sizes 10-in. and larger, the ground strap may come attached to the sensor body near the flange. See Figure 16.

Figure 12. Grounding Straps in Conductive Unlined Pipe or Reference Electrode in Lined Pipe

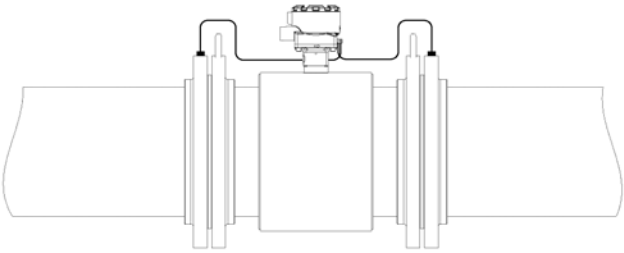

Figure 13. Grounding with Grounding Rings in Conductive Pipe

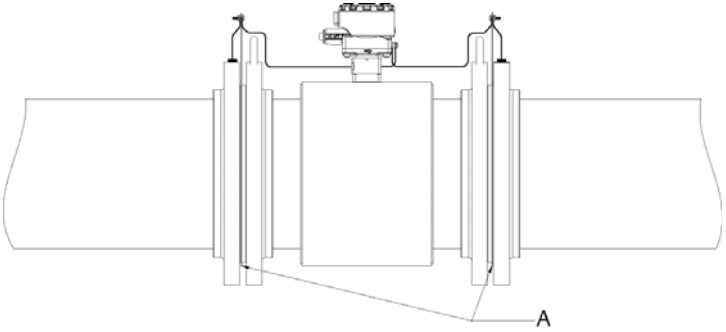

A. Grounding rings

Figure 14. Grounding with Grounding Rings in Non-conductive Pipe

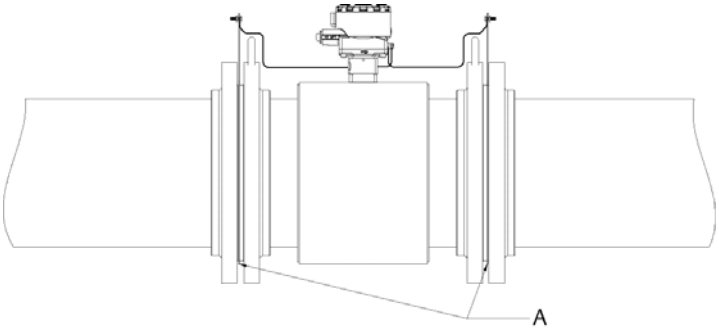

A. Grounding rings

Figure 15. Grounding with Reference Electrode in Conductive Unlined Pipe

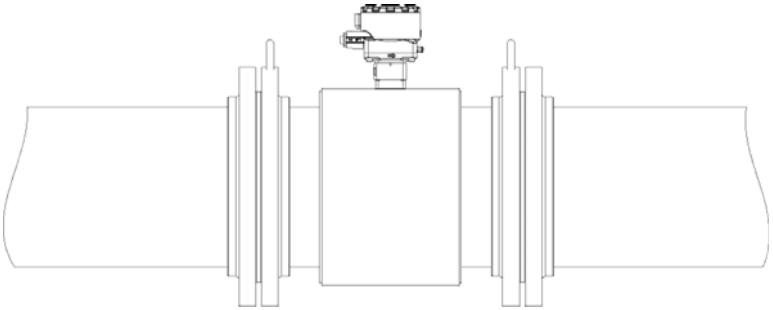

Figure 16. Grounding for Line Sizes 10-in. and Larger

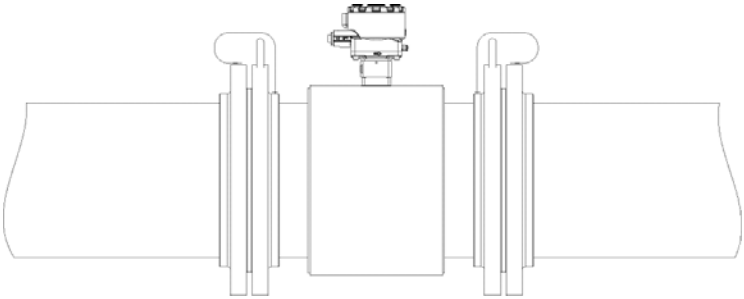

6.0 Wiring the transmitter

This wiring section covers the wiring between the transmitter and sensor, the 4–20mA output, and supplying power to the transmitter. Follow the conduit information, cable requirements, and disconnect requirements in the sections below.

For sensor wiring diagrams, see Electrical Drawing 8750W-1504.

See Installation Drawing 8750W-1052.

6.1 Conduit entries and connections

The standard conduit entries for the transmitter and sensor are 1/2-in. NPT. Conduit connections should be made in accordance with national, local, and plant electrical codes. Unused conduit entries should be sealed with the appropriate certified plugs. The flow sensor is rated IP68. For sensor installations requiring IP68 protection, the cable glands, conduit, and conduit plugs must be rated for IP68. The plastic shipping plugs do not provide ingress protection.

6.2 Conduit requirements

- Bundled cables from other equipment in a single conduit are likely to create interference and noise in the system. See Figure 17.
- Electrode cables should not be run together and should not be in the same cable tray with power cables.
- Output cables should not be run together with power cables.
- Select conduit size appropriate to feed cables through to the flowmeter.

Figure 17. Best Practice Conduit Preparation

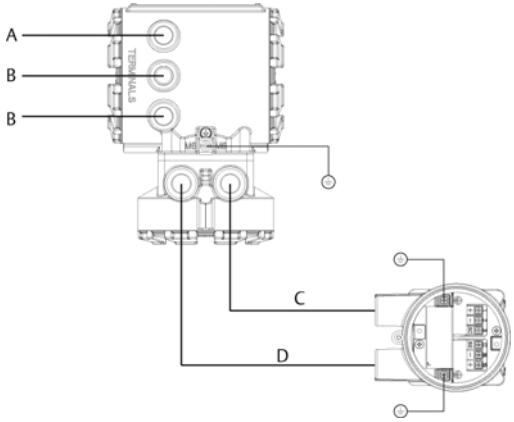

A. Power
B. Output
C. Coil
D. Electrode

6.3 Connecting sensor to transmitter

Integral mount transmitters

Integral mount transmitters ordered with a sensor will be shipped assembled and wired at the factory using an interconnecting cable (see Figure 18). Use only the interconnecting cable provided by Emerson Process Management.

For replacement transmitters use the existing interconnecting cable from the original assembly. Replacement cables are available.

Figure 18. Interconnecting Cables

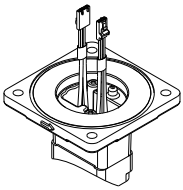

Remote mount transmitters

Cables kits are available as individual component cables or as a combination coil/electrode cable. Remote cables can be ordered direct from Rosemount using the kit numbers shown in Table 9 and Table 11. Equivalent Alpha cable part numbers are also provided as an alternative. To order cable, specify length as quantity desired. Equal length of component cables is required.

Example: 25-feet = Qty (25) 08732-0065-0001

Table 9. Component Cable Kits

Standard temperature (-20 °C to 75 °C)			
Cable kit number	**Description**	**Individual cable**	**Alpha p/n**
08732-0065-0001 (feet)	Kit, component cables, std temp. (includes coil + electrode)	Coil Electrode	518243 518245
08732-0065-0002 (meters)	Kit, component cables, std temp. (includes coil + electrode)	Coil Electrode	518243 518245
08732-0065-0003 (feet)	Kit, component cables, std temp. (includes coil + i.s. electrode)	Coil Intrinsically Safe Blue Electrode	518243 518245
08732-0065-0004 (meters)	Kit, component cables, std temp. (includes coil + i.s. electrode)	Coil Intrinsically Safe Blue Electrode	518243 518245

Extended temperature (-50 °C to 125 °C)			
Cable kit number	**Description**	**Individual cable**	**Alpha p/n**
08732-0065-1001 (feet)	Kit, component cables, ext temp. (includes coil + electrode)	Coil Electrode	840310 518189
08732-0065-1002 (meters)	Kit, component cables, ext temp. (includes coil + electrode)	Coil Electrode	840310 518189
08732-0065-1003 (feet)	Kit, component cables, ext temp. (includes coil + i.s. electrode)	Coil Intrinsically safe blue Electrode	840310 518189
08732-0065-1004 (meters)	Kit, component cables, ext temp. (includes coil + i.s. electrode)	Coil Intrinsically safe blue Electrode	840310 518189

Table 10. Combination Cable Kits

Coil and electrode cable (-20 °C to 80 °C)	
Cable kit number	**Description**
08732-0065-2001 (feet)	Kit, combination cable, standard
08732-0065-2002 (meters)	
08732-0065-3001 (feet)	Kit, combination cable submersible (80 °C dry/60 °C Wet) (33-ft. Continuous)
08732-0065-3002 (meters)	

Cable requirements

Shielded twisted pairs or triads must be used. For installations using the individual coil drive and electrode cable, see Figure 19. Cable lengths should be limited to less than 500-feet (152 m). Consult your local Emerson representative for length between 500–1000-feet (152-304 m). Equal length cable is required for each.

For installations using the combination coil drive/electrode cable, see Figure 20. Combination cable lengths should be limited to less than 330-feet (100 m).

Figure 19. Individual Component Cables

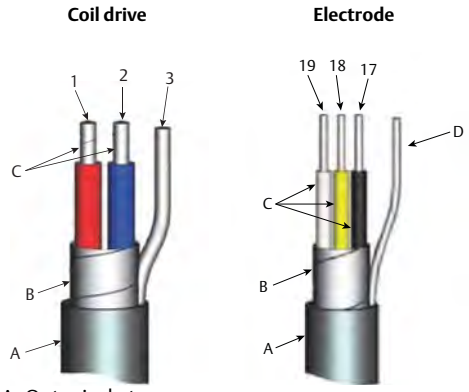

Cable number	Color
1	Red
2	Blue
3	Drain
17	Black
18	Yellow
19	White

A. Outer jacket
B. Overlapping foil shield
C. Twisted stranded insulated conductors
D. Drain
E. Coil drive
F. Electrode

Figure 20. Combination Coil and Electrode Cable

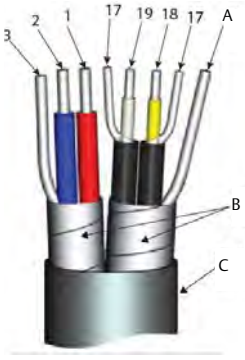

Cable number	Color
1	Red
2	Blue
3	Drain
17	Black
18	Yellow
19	White

A. Electrode shield-drain
B. Overlapping foil shield
C. Outer jacket

Cable preparation

When preparing all wire connections, remove only the insulation required to fit the wire completely under the terminal connection. Prepare the ends of the coil drive and electrode cables as shown in Figure 21. Limit the unshielded wire length to less than one inch on both the coil drive and electrode cables. Any length of unsheathed conductor should be insulated. Excessive removal of insulation may result in an unwanted electrical short to the transmitter housing or other wire connections. Excessive unshielded lead length, or failure to connect cable shields properly, may expose the unit to electrical noise, resulting in an unstable meter reading.

Figure 21. Cable Ends

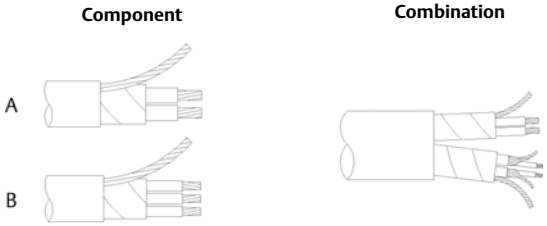

A. Coil
B. Electrode

⚠WARNING

Shock Hazard

Potential shock hazard across remote junction box terminals 1 and 2 (40V).

Explosion Hazard

Electrodes exposed to process. Use only compatible transmitter and approved installation practices.

Figure 22. Remote Junction Box Views

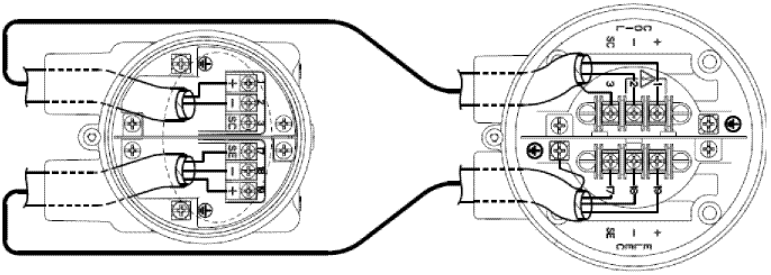

A

A. Sensor

For complete sensor wiring diagrams,
reference Installation Drawing Rosemount 8750W-1052.

6.4 Transmitter terminal block connections

Field mount transmitter

Remove the back cover of the transmitter to access the terminal block. See Figure 23 for terminal identification. To connect pulse output and/or discrete input/output consult the comprehensive product manual.

Figure 23. Field Mount Terminal Block Connections

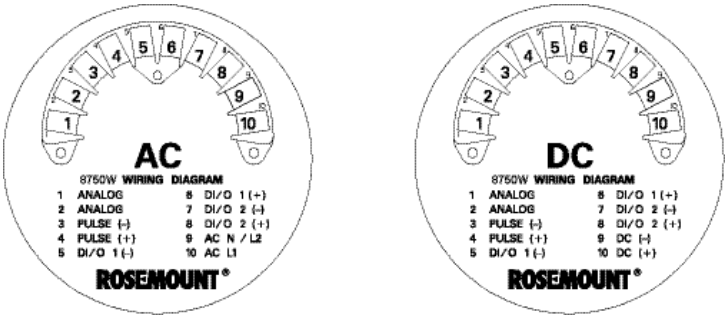

Wall mount transmitter

Open the lower cover of the transmitter to access the terminal block. See Figure 24 for terminal identification or inside the over for wiring terminal identification. To connect the pulse output and or discrete input/output, consult the comprehensive product manual.

Figure 24. Wall Mount Transmitter Terminal Block Connections

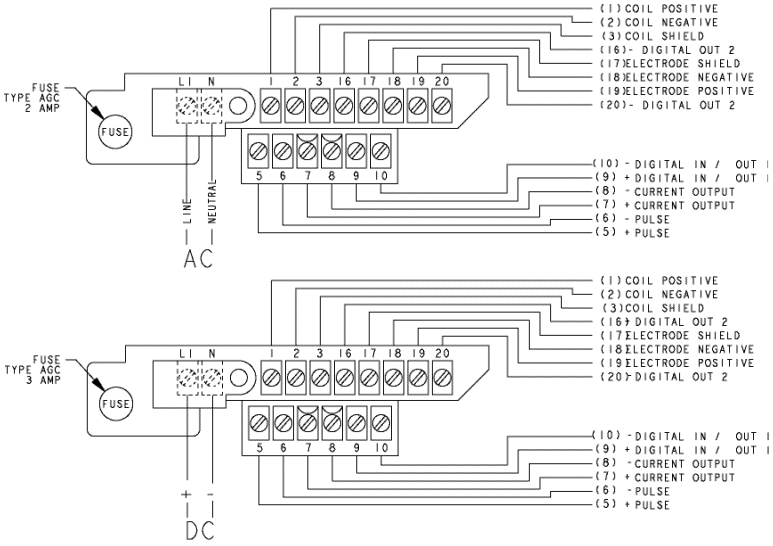

6.5 Analog output

Field mount transmitter

The analog output signal is a 4–20mA current loop. The loop can be powered internally or externally via a hardware switch located on the front of the electronics stack. The switch is set to internal power when shipped from the factory. For field mount units with a display, the LOI must be removed to change switch position.

For HART communication a minimum resistance of 250 ohms is required. It is recommended to use individually shielded twisted pair cable. The minimum conductor size is 0.51mm diameter (#24 AWG) for cable runs less than 5,000-feet (1,500m) and 0.81mm diameter (#20 AWG) for longer distances.

Internal power

The 4-20mA analog signal is a 24VDC active output.

Maximum allowable loop resistance is 500 ohms.

Wire terminal 1 (+) and terminal 2 (-). See Figure 25.

Figure 25. Field Mount Transmitter Analog Wiring - Internal Power

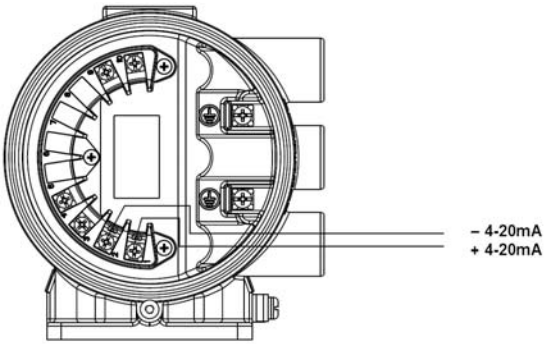

NOTICE

Terminal polarity for the analog output is reversed between internally and externally powered.

External power

The 4–20mA analog signal is passive and must be powered from an external power source. Power at the transmitter terminals must be 10.8–30VDC.

Wire terminal 1 (-) and terminal 2 (+). See Figure 26.

Figure 26. Field Mount Transmitter Analog Wiring - External Power

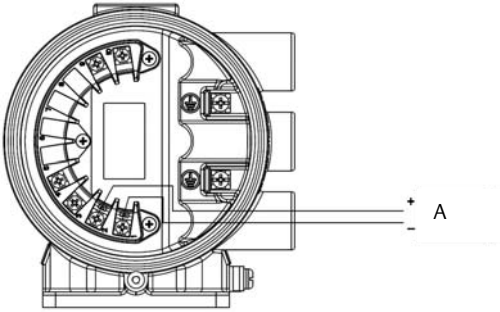

A. Power supply

Analog loop load limitations

Maximum loop resistance is determined by the voltage level of the external power supply, as described in Figure 27.

Figure 27. Field Mount Transmitter Analog Loop Load Limitations

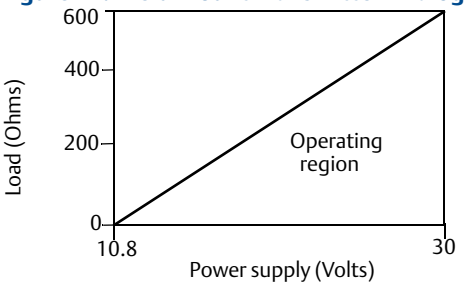

R_{max} = 31.25 (V_{ps} – 10.8)
V_{ps} = Power supply voltage (Volts)
R_{max} = Maximum loop resistance (Ohms)

Wall mount transmitter

The analog output signal is a 4–20mA current loop. The loop can be powered internally or externally via a hardware switch. The switch is set to internal power when shipped from the factory.

For HART communication a minimum resistance of 250 ohms is required. It is recommended to use individually shielded twisted pair cable. The minimum conductor size is 0.51mm diameter (#24 AWG) for cable runs less than 5,000-feet (1,500m) and 0.81mm diameter (#20 AWG) for longer distances.

Internal power

The 4–20mA analog signal is a 24VDC active output.

Maximum allowable loop resistance is 500 ohms.

External power

The 4–20 mA analog signal is powered from an external power source. HART multidrop installations require a 10–30VDC external analog power source.

Figure 28. Wall Mount Transmitter Analog Wiring

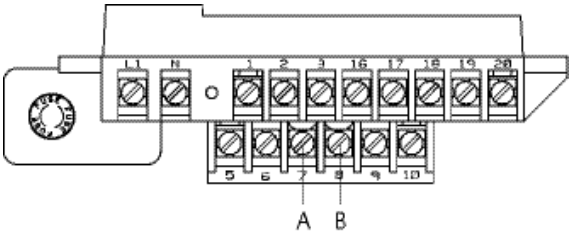

A. +4–20 mA
B. -4–20 mA

Analog loop load limitations

Maximum loop resistance is determined by the voltage level of the external power supply, as described in Figure 29.

Figure 29. Wall Mount Transmitter Analog Loop Load Limitations

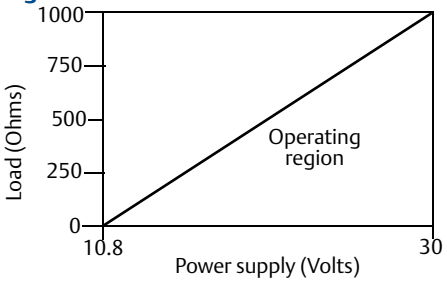

R_{max} = 52.08 (V_{ps} – 10.8)
V_{ps} = Power supply voltage (Volts)
R_{max} = Maximum loop resistance (Ohms)

6.6 Powering the transmitter

The transmitter is available in two models. The AC powered transmitter is designed to be powered by 90–250VAC (50/60Hz). The DC powered transmitter is designed to be powered by 12–42VDC. Before connecting power to the Rosemount 8750W, be sure to have the proper power supply, conduit, and other accessories. Wire the transmitter according to national, local, and plant electrical requirements for the supply voltage.
See Figure 30 or Figure 32.

Figure 30. Field Mount Transmitter DC Power Requirements

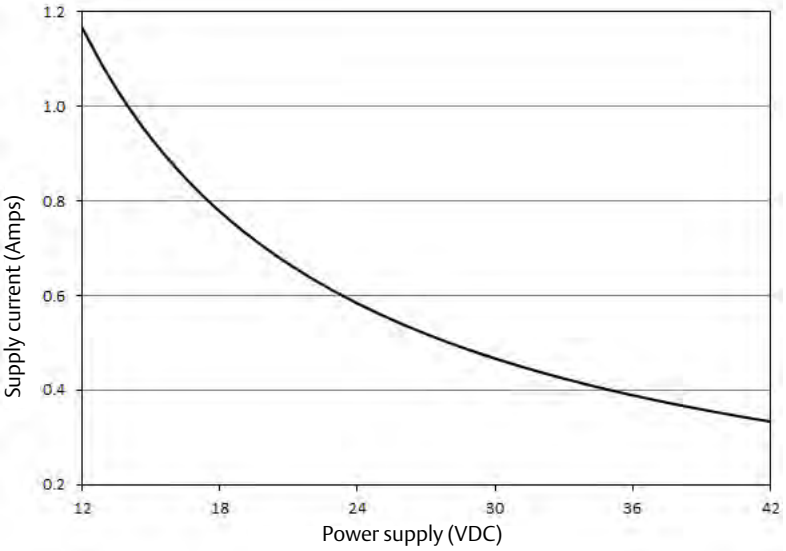

Peak inrush is 42A at 42VDC supply, lasting approximately 1ms.

Inrush for other supply voltages can be estimated with:

Inrush (Amps) = Supply (Volts)/1.0

Figure 31. Wall Mount Transmitter DC Power Requirements

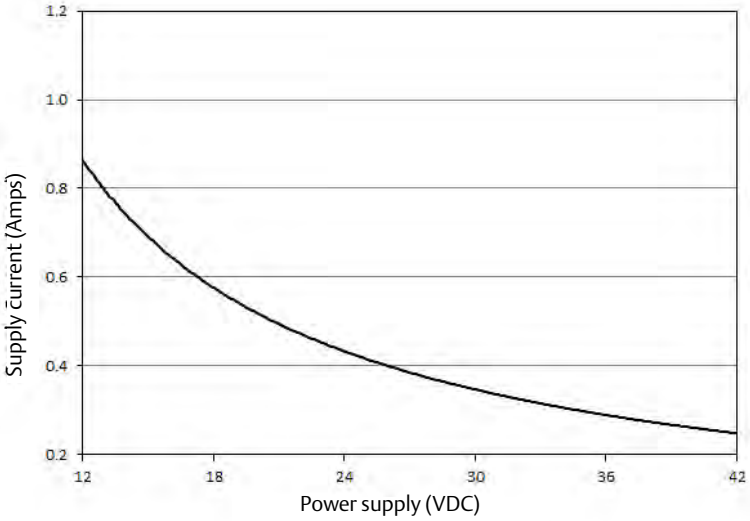

Figure 32. Field Mount Transmitter AC Power Requirements

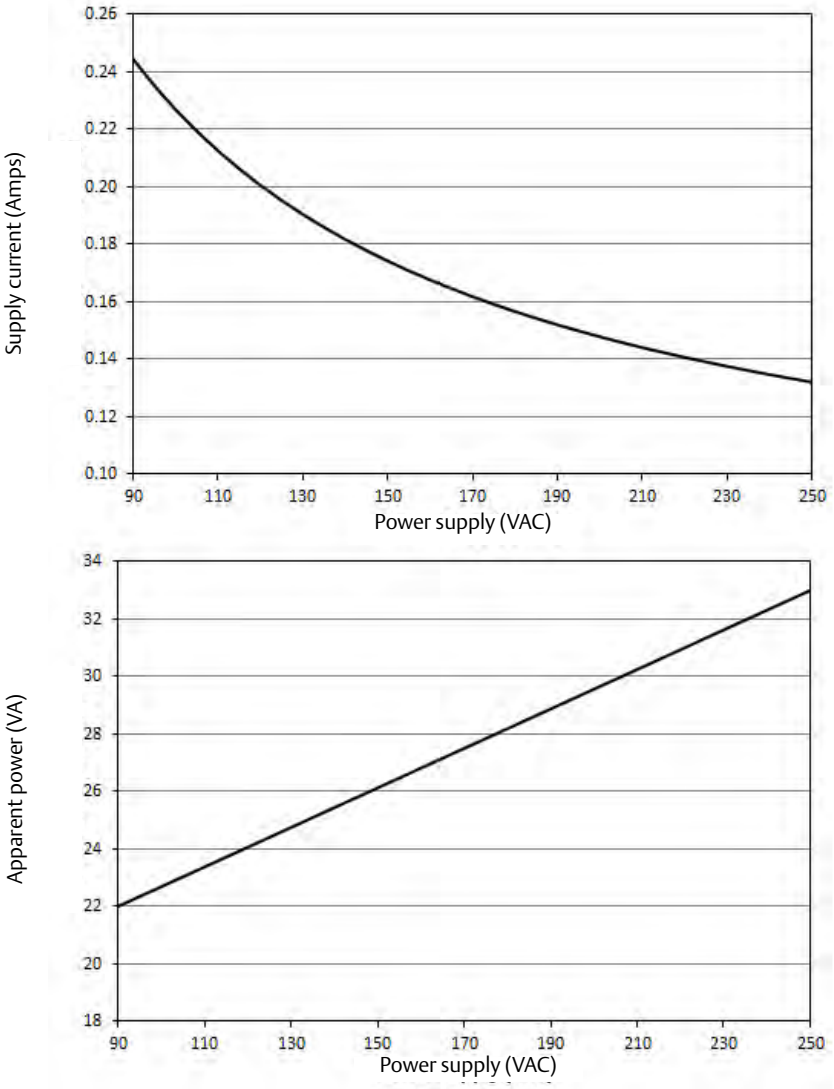

Peak inrush is 35.7A at 250VAC supply, lasting approximately 1ms.
Inrush for other supply voltages can be estimated with:
Inrush (Amps) = Supply (Volts)/7.0

Figure 33. Wall Mount Transmitter AC Power Requirements

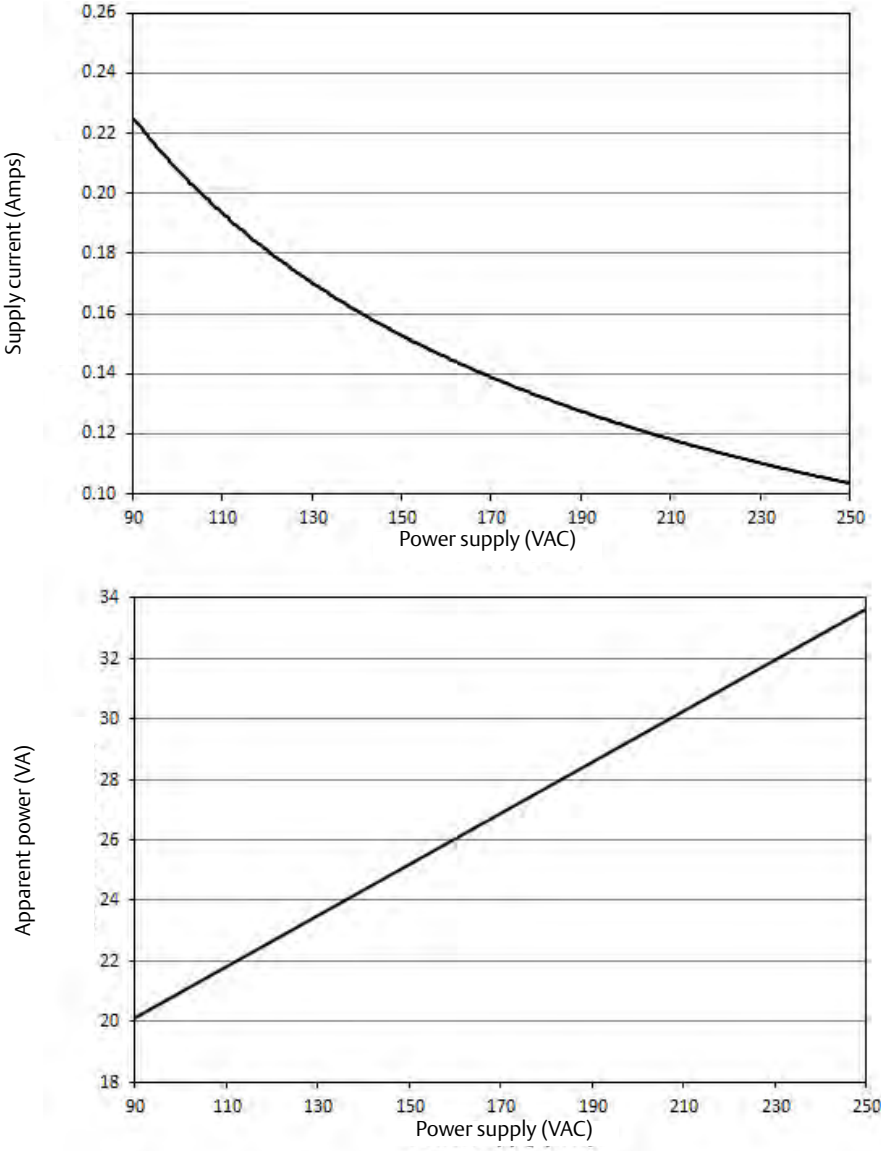

Supply wire requirements

Use 10–18 AWG wire rated for the proper temperature of the application. For wire 10–14 AWG use lugs or other appropriate connectors. For connections in ambient temperatures above 122 °F (50 °C), use a wire rated for 194 °F (90 °C). For DC powered transmitters with extended cable lengths, verify that there is a minimum of 12VDC at the terminals of the transmitter with the device under load.

Disconnects

Connect the device through an external disconnect or circuit breaker per national and local electrical code.

Installation category

The installation category for the Rosemount 8750W is OVERVOLTAGE CAT II.

Overcurrent protection

The Rosemount 8750W Transmitter requires overcurrent protection of the supply lines. Fuse rating and compatible fuses are shown in Table 11 and Table 12.

Table 11. Field Mount Transmitter Fuse Requirements

Input voltage	Fuse rating	Compatible fuse
90-250VAC rms	1 Amp, 250V, $I^2t \geq 1.5\ A^2s$ Rating, Fast Acting	Bussman AGC-1, Littelfuse 31201.5HXP
12-42VDC	3 Amp, 250V, $I^2t \geq 14\ A^2s$ Rating, Fast Acting	Bel Fuse 3AG 3-R, Littelfuse 312003P, Schurter 0034.5135

Table 12. Wall Mount Transmitter Fuse Requirements

Input voltage	Fuse rating	Compatible fuse
90–250VAC	2 Amp, fast acting	Bussman AGC-2
12–42VDC	3 Amp, fast acting	Bussman AGC-3

Field mount transmitter power terminals

See Figure 23 for field mount terminal connections.

For AC powered transmitter (90–250VAC, 50/60 Hz)

- Connect AC Neutral to terminal 9 (AC N/L2) and AC Line to terminal 10 (AC/L1).

For DC powered transmitter

- Connect negative to terminal 9 (DC -) and positive to terminal 10 (DC +).
- DC powered units may draw up to 1.2A.

Wall mount transmitter power terminals

See Figure 24 for wall mount transmitter terminal connections.

For AC powered transmitter (90–250VAC, 50/60 Hz)

- Connect AC Neutral to terminal N and AC Line to terminal L1.

For DC powered transmitter

- Connect DC- to terminal N and DC+ to terminal L1.

Field mount transmitter cover jam screw

For flow meters shipped with a cover jam screw, the screw should be installed after the instrument has been wired and powered up. Follow the steps to install the cover jam screw:

1. Verify the cover jam screw is completely threaded into the housing.
2. Install the housing cover and verify the cover is tight against the housing.
3. Using a 2.5 mm hex wrench, loosen the jam screw until it contacts the transmitter cover.
4. Turn the jam screw an additional 1/2 turn counterclockwise to secure the cover.

Note
Application of excessive torque may strip the threads.

5. Verify the cover cannot be removed.

7.0 Basic configuration

Once the magnetic flowmeter is installed and power has been supplied, the transmitter must be configured through the basic setup. These parameters can be configured through either a local operator interface or a HART communication device. Configuration settings are saved in nonvolatile memory within the transmitter. A table of all the parameters is located in Table 13. Descriptions of the more advanced functions are included in the comprehensive product manual.

7.1 Basic setup

Tag

Tag is the quickest and shortest way of identifying and distinguishing between transmitters. Transmitters can be tagged according to the requirements of your application. The tag may be up to eight characters long.

Flow units (PV)

The flow units variable specifies the format in which the flow rate will be displayed. Units should be selected to meet your particular metering needs.

Line size

The line size (sensor size) must be set to match the actual sensor connected to the transmitter. The size must be specified in inches.

URV (upper range value)

The URV sets the 20 mA point for the analog output. This value is typically set to full-scale flow. The units that appear will be the same as those selected under the flow units parameter. The URV may be set between –39.3 ft/s to 39.3 ft/s (–12 m/s to 12 m/s). There must be at least 1 ft/s (0.3 m/s) span between the URV and LRV.

LRV (lower range value)

The LRV sets the 4 mA point for the analog output. This value is typically set to zero flow. The units that appear will be the same as those selected under the flow units parameter. The LRV may be set between –39.3 ft/s to 39.3 ft/s (–12 m/s to 12 m/s). There must be at least 1 ft/s (0.3 m/s) span between the URV and LRV.

7.2 Calibration number

The sensor calibration number is a 16-digit number generated at the Rosemount factory during flow calibration and is unique to each sensor and is located in the sensor tag.

Table 13. Handheld Fast Keys (Field Communicator)

Function	HART fast keys
Process variables	1, 1
Primary Variable (PV)	1, 1, 1
PV Percent of range (PV % rnge)	1, 1, 2
PV Analog Output (AO) (PV Loop current)	1, 1, 3
Totalizer set-up	1, 1, 4
Totalizer units	1, 1, 4, 1
Gross total	1, 1, 4, 2
Net total	1, 1, 4, 3
Reverse total	1, 1, 4, 4
Start totalizer	1, 1, 4, 5
Stop totalizer	1, 1, 4, 6
Reset totalizer	1, 1, 4, 7
Pulse output	1, 1, 5
Basic setup	1, 3
Tag	1, 3, 1
Flow units	1, 3, 2
PV units	1, 3, 2, 1
Special units	1, 3, 2, 2
Line size	1, 3, 3
PV Upper Range Value (URV)	1, 3, 4
PV Lower Range Value (LRV)	1, 3, 5
Calibration number	1, 3, 6
PV Damping	1, 3, 7
Review	1, 5

7.3 Field mount transmitter local operator interface

To activate the optional Local Operator Interface (LOI), press the DOWN arrow two times. Use the UP, DOWN, LEFT, and RIGHT arrows to navigate the menu structure. A map of the LOI menu structure is shown on Figure 34. The display can be locked to prevent unintentional configuration changes. The display lock can be activated through a HART communication device, or by holding the UP arrow for three seconds and then following the on-screen instructions. When the display lock is activated, a lock symbol will appear in the lower right hand corner of the display. To deactivate the display lock, hold the UP arrow for three seconds and follow the on-screen instructions. Once deactivated, the lock symbol will no longer appear in the lower right hand corner of the display.

Figure 34. Field Mount Transmitter Local Operator Interface (LOI) Menu Tree

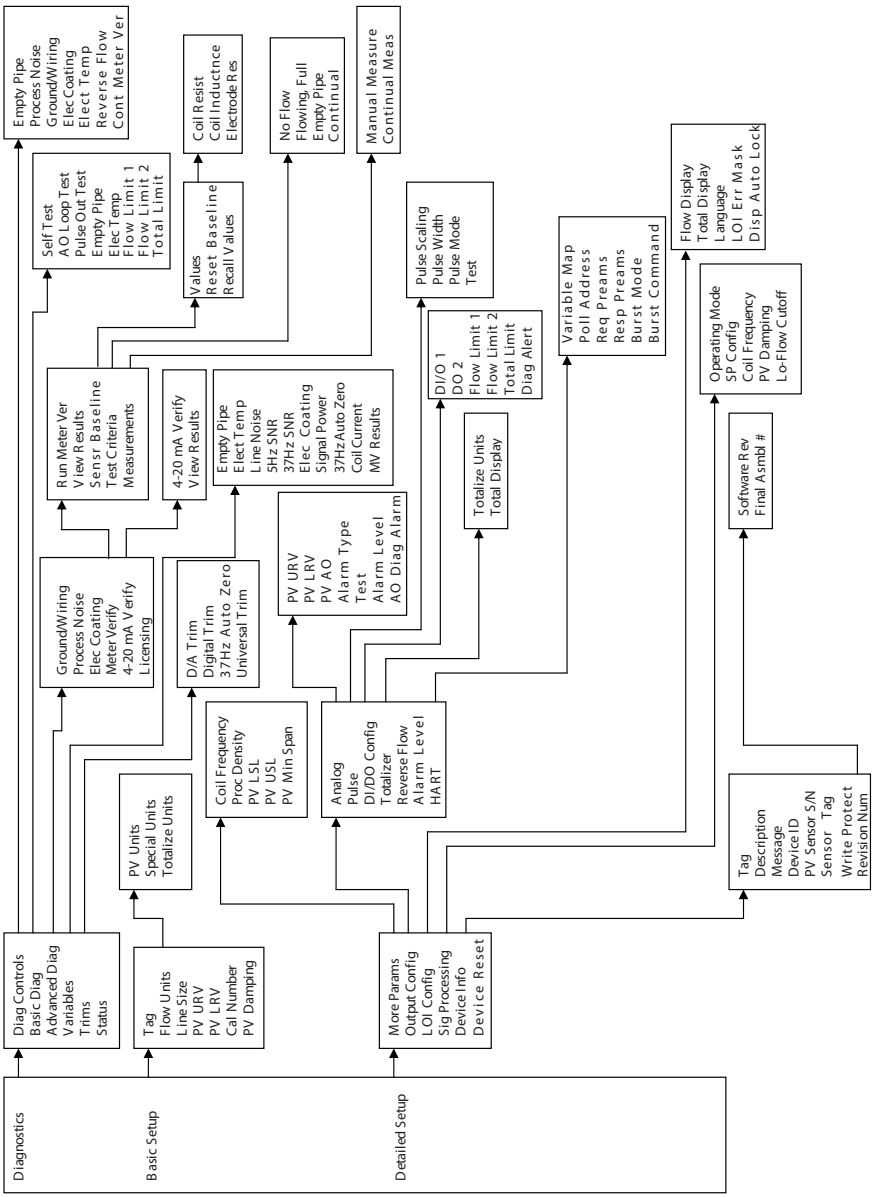

Figure 35. Wall Mount Transmitter Local Operator Interface (LOI) Menu Tree

8.0 Product Certifications

Table 14. Rosemount 8750W Platform

Order code	Platform rating	Region	Agency	Certification number
-	Ordinary Locations[1]	USA, Canada EU, CU[2]	FM or CSA and EAC	3030548(FM) or 70030489(CSA)
Z1	ATEX Non-Sparking and Dust for Non-Flammable Fluids	EU	DEKRA	15ATEX0003 X
ND	ATEX Dust	EU	DEKRA	15ATEX0003 X
Z2	InMetro Non-Sparking and Dust for Non-Flammable Fluids	Brazil	PENDING[3]	PENDING
Z3	NEPSI Non-Sparking and Dust for Non-Flammable Fluids	China	NEPSI	GYJ15.1228X
Z5	DIP (Dust-Ignitionproof) Class II and III, Div 1. Non-Incendive, Class I Div 2 for Non-Flammable Fluids	USA	FM	3030548
Z6	CSA, Class I Div 2 for Non-Flammable Fluids; DIP, NI	USA and Canada	CSA	70030489
Z7	IECEx Non-Sparking and Dust for Non-Flammable Fluids	Global	DEKRA	IECEx DEK 15.0001X
NF	IECEx Dust	Global	DEKRA	IECEx DEK 15.0001X
Z9	KTL Non-Sparking and Dust for Non-Flammable Fluids	Korea	KTL[3]	PENDING

1. Complies with only the local country Product safety, electromagnetic, pressure and other applicable regulations. Cannot be used in a classified or zoned hazardous location environment.
2. Customs union (Russia, Belarus and Kazakhstan).
3. Planned submittal or in process with agency.

Table 15. Approval Markings and Logos

Symbol[1]	Marking or symbol name	Region	Meaning of marking or symbol
	CE	European Union	Compliance with all applicable European Union Directives.
	ATEX	European Union	Compliance with Equipment and Protective systems intended for use in Potentially Explosive Atmospheres directive (ATEX) (94/9/EC).
	C-tick	Australia	Compliance with Australian applicable electromagnetic compatibility standards.
	FM Approved	United States	Compliance with the applicable ANSI standards.
	CSA	US = United States C = Canada	Indicates that the product was tested and has met the applicable certification requirements for the noted countries.
	Eurasian Conformity (EAC)	Eurasian Customs Union (Russia, Belarus and Kazakhstan)	Compliance with all of the applicable technical regulations of the EAC Customs Union.
	INMETRO	Brazil	Compliance with all of the applicable technical regulations of Brazil.
	NEPSI	China	Compliance with all of the applicable technical regulations of China.
	KTL	Korea	Compliance with all of the applicable technical regulations of Korea.

1.Ordinary Location labels will be marked with CE, C-tick, FM, CSA, and EAC logos.

8.1 European Directive Information

A copy of the EC Declaration of Conformity can be found at the end of the Quick Start Guide. The most recent revision of the EC Declaration of Conformity can be found at EmersonProcess.com/Rosemount.

Electro Magnetic Compatibility (EMC) (2004/108/EC) and (2014/30/EU)

EN 61326-1: 2013

Low Voltage Directive (LVD) (2006/95/EC) and (2014/35/EU)

EN 61010-1: 2010

Ingress protection rating for dust and water

Degree of protection, per EN-IEC 60079-0 and EN-IEC 60529: IP66(1)

Degree of protection, per EN-IEC 60079-0 and EN-IEC 60529: IP66, IP68 (10m, 48h)(2)

Degree of protection, per EN-IEC 60079-0 and ISO 20653: IP69K(3)

European Pressure Equipment Directive (PED) (97/23/EC) and (2014/68/EU)

PED Certification requires the “PD” option code.

CE marked models that are ordered without the “PD” option will be marked “Not Complaint to (97/23/EC and 2014/68/EU)”

Mandatory CE-marking with notified body number 0575 or 2460, for all flowtubes is located on the flowmeter label.

Category I assessed for conformity per module A procedures.

Categories II - III assessed for conformity per module H procedures.

QS Certificate of Assessment

EC No. 4741-2014-CE-HOU-DNV: Module H Conformity Assessment

Rosemount 8750W Flanged Flowtubes

Line size 40 mm to 600 mm ($1^1/_2$-in to 24-in)

EN 1092-1 flanges and ASME B16.5 class 150 and ASME B16.5 Class 300 flanges.

Also available in ASME B16.5 Class 600 flanges in limited line sizes.

All other Rosemount Flanged Flowtubes - line sizes of 25 mm (1-in.) and less: Sound Engineering Practice (SEP).

Flowtubes that are SEP are outside the scope of PED and cannot be marked for compliance with PED.

1. *The transmitter is rated IP66 when integral or remote mounted, it is not IP68 nor IP69K rated.*
2. *The IP68 rating only applies to the flowtube and the remote junction box when the transmitter is remotely mounted. The IP68 rating is only valid at a depth of 10 meters for 48 hours.*
3. *The IP69K rating only applies to the flowtube and the remote junction box when the transmitter is remotely mounted. The temperature K = 80 °C.*

8.2 Certifications

Factory Mutual (FM)

Ordinary Location Certification for FM Approvals

As standard, the transmitter and flowtube have been examined and tested to determine that the design meets basic electrical, mechanical, and fire protection requirements by FM Approvals, a nationally recognized testing laboratory (NRTL) as accredited by the Federal Occupational Safety and Health Administration (OSHA).

Rosemount 8750W Magnetic Flowtube and Transmitter

Z5 All Flowtubes and Integral or Remote Mount Transmitters
(Transmitter mount codes T or R)
Non-Incendive for Class I, Division 2, Groups ABCD: T4 Dust-Ignition Proof for Class II/III, Division 1, Groups EFG: T5 -29 °C ≤ T_a ≤ 60 °C
Enclosure Type 4X, IP66/68 (IP68 flowtube only with Remote mount transmitter)
Install per drawing 8750W-1052.

Special Condition for Safe Use (X):

1. Flowtube to be used only in a non-flammable process.

Rosemount 8750W Magnetic Flowtube and Transmitter

Z5 All Flowtubes and Wall Mount Transmitter (Transmitter mount code W)
Non-Incendive for Class I, Division 2, Groups ABCD: T4 Dust-Ignition Proof for Class II/III, Division 1, Groups EFG: T4-29 °C ≤ T_a ≤ 40 °C
Enclosure Type 4X, IP66/68 (IP68 flowtube only)
Install per drawing 8750W-1052.

Special Condition for Safe Use (X):

1. Flowtube to be used only in a non-flammable process.

CSA

Ordinary Location Certification for FM Approvals

As standard, the transmitter and flowtube have been examined and tested to determine that the design meets basic electrical, mechanical, and fire protection requirements by FM Approvals, a nationally recognized testing laboratory (NRTL) as accredited by the Federal Occupational Safety and Health Administration (OSHA).

Rosemount 8750W Magnetic Flowtube and Transmitter

Z6 Non-Incendive for Class I, Division 2, Groups ABCD: T4
Dust-Ignition Proof for Class II/III, Division 1, Groups EFG: T4 -29 °C ≤ T_a ≤ 60 °C
(Transmitter mount codes T or R)
-29 °C ≤ T_a ≤ 40 °C (Transmitter mount code W)
Enclosure Type 4X, IP66/68/69K[(1)]
Install per drawing 8750W-1052.

Special Condition for Safe Use (X):

1. Flowtube to be used only in a non-flammable process.

1. *The transmitter is rated IP66 when integral or remote mounted, it is not IP68 nor IP69K rated. The IP68 rating only applies to the flowtube and the remote junction box when the transmitter is remotely mounted. The IP68 rating is only valid at a depth of 10 meters for 48 hours. The IP69K rating only applies to the flowtube and the remote junction box when the transmitter is remotely mounted. The temperature K = 80 °C.*

Figure 36. Rosemount 8750W Declaration of Conformity

EMERSON. Process Management

ROSEMOUNT

CE

EC Declaration of Conformity

No: RFD 1098 Rev. G

We,

Emerson Process Management
Rosemount Flow
12001 Technology Drive
Eden Prairie, MN 55344
USA

declare under our sole responsibility that the product(s),

Rosemount Model 8750W Magnetic Flowmeters

to which this declaration relates, is in conformity with the provisions of the European Community Directives, including the latest amendments, as shown in the attached schedule.

Assumption of conformity is based on the application of harmonized or applicable technical standards and, when applicable or required, a European Community notified body certification, as shown in the attached schedule.

(signature)

22 February 2016
(date of issue)

Mark Fleigle
(name - printed)

Vice President Technology and New Products
(function name - printed)

F FILE ID: 8750W CE Marking Page 1 of 3 RFD1098.docx

EMERSON. Process Management

ROSEMOUNT

CE

Schedule

EC Declaration of Conformity RFD 1098 Rev. G

LVD Directive (2006/95/EC) and (2014/35/EU) as of 20 April 2016

All Models: EN 61010-1: 2010

EMC Directive (2004/108/EC) and (2014/30/EU) as of 20 April 2016

All Models: EN 61326-1: 2013

PED Directive (97/23/EC) and (2014/68/EU) as of 19 July 2016

Model 8750W Magnetic Flowtube with Option "PD", in Line Sizes 1.5" – 24"

Equipment without the 'PD' option is NOT PED compliant and cannot be used in the EEA without further assessment unless the installation is exempt under Article 1, paragraph 3 of the PED Directive (97/23/EC) or (2014/68/EU)

QS Certificate of Assessment - EC No. 4741-2014-CE-HOU-DNV
Module H Conformity Assessment
ASME B31.3: 2010

Model 8750W in Line Sizes 0.5" – 1.0"
Sound Engineering Practice
ASME B31.3: 2010

FILE ID: 8750W CE Marking Page 2 of 3 RFD1098.docx

EMERSON. Process Management

ROSEMOUNT

CE

Schedule

EC Declaration of Conformity RFD 1098 Rev. G

ATEX Directive (94/9/EC) and (2014/34/EU) as of 20 April 2016

Model 8750W Magnetic Flow Transmitter and Flow Tubes

CERTIFICATE: DEKRA 15ATEX0003 X
Equipment Marking Summary:

II 3 G	Ex nA [ic] IIC T4 Gc
II 3 G	Ex nA ic IIC T5…T4 Gc
II 3 D	Ex tc IIIC T 80°C…T 130°C Dc

EN 60079-0: 2012 +A11:2013
EN 60079-15: 2010
EN 60079-11: 2012
EN 60079-31: 2014

PED Notified Body

DNV GL [Notified Body Number: 0575]
Veritasveien 1, N-1322
Hovik, Norway

Or

DNV Nemko Presafe AS [Notified Body number: 2460]
P.O. Box 73, Blindern
0314 Oslo, Norway

8.3 IEC EX & ATEX

1. Equipment markings:
   a. Type Examination Certificate (ATEX): DEKRA 15ATEX0003 X
   b. Certificate of Conformity (IECEx): IECEx DEK 15.0001X
2. Required documentation:
   a. 8750W-2052 Installation Drawing Model 8750W ATEX/IECEx Hazardous (Ex) Locations
3. Referenced documentation:
   a. 00825-0300-4750.pdf, Quick Installation Guide
   b. 00809-0300-4750.pdf, Reference Manual
   c. 8750W-AP01, Approvals Document
   d. 8750W-1504 Installation Drawing, 8750W Transmitter Wiring
4. The Required and Referenced Documents listed above address the following items:
   a. Instructions for safety i.e.
      i. Putting into service
      ii. Use
      iii. Assembling and dismantling
      iv. Maintenance, overhaul and repair
      v. Installation
      vi. Adjustment
   b. Where necessary, training instructions
   c. Details which allow a decision to be made as to whether the equipment can be used safely in the intended area under the expected operating conditions.

d. Electrical parameters, maximum surface temperatures and other limit values.

i. Electrical

1. See document 8750W-2052

Rosemount 8750W Flow Transmitter	
Power input	90 - 250 VAC, 0.45 A, 40 VA 12 - 42 VDC, 1.2 A, 15 W
Pulsed circuit	Internally powered (Active): outputs up to 12 VDC, 12.1 mA, 73 mW Externally powered (Passive): input up to 28 VDC, 100 mA, 1 W
4-20 mA output circuit	Internally Powered (Active): outputs up to 25 mA, 24 VDC, 600 mW Externally Powered (Passive): input up to 25 mA, 30 VDC, 750 mW
Modbus®	Internally Powered (Active): outputs up to 100 mA, 3.3 VDC, 100 mW
Um	250 V
Coil excitation output	500 mA, 40 V_{max}, 9 W_{max}
Rosemount 8750W Flowtube[(1)]	
Coil excitation input	500 mA, 40 V_{max}, 20 W_{max}
Electrode circuit	5 V, 200 uA, 1 mW

1. Provided by the transmitter.

Special Conditions for Safe Use (X):

1. When “Special Paint Systems” are applied, instructions for safe use regarding potential electrostatic charging hazard have to be followed.
2. Terminals 1,2,3,4, for data communication, cannot withstand the 500 V isolation test between signal and ground, due to integral transient protection. This must be taken into account upon installation.
3. Conduit entries must be installed to maintain the enclosure ingress rating of IP66 (Transmitter and Flow Tube), IP68 or IP69K (Flow Tube) as applicable.
4. The flow tube and transmitter are not allowed to be thermally insulated.

e. Where necessary, the essential characteristics of tools which may be fitted to the equipment

i. No proprietary tools required.

f. List of the standards, including the issue date, with which the equipment is declared to comply:

i. ATEX - EN 60079-0 : 2012 + A11 : 2013, EN 60079-11 : 2012, EN 60079-15 : 2010, EN 60079-31 : 2014

ii. IECEx - IEC 60079-0: 2011, IEC 60079-11: 2011, IEC 60079-15: 2010, IEC 60079-31: 2013

g. Supply wire requirements;
Use 10–18 AWG wire rated for the proper temperature of the application.
For wire 10–14 AWG use lugs or other appropriate connectors. For connections in ambient temperatures above 122 °F (50 °C), use a wire rated for 194 °F (90 °C).

h. Contact address:
Rosemount Inc.
12001 Technology Drive
Eden Prairie,
MN 55344
United States of America

Table 16. Nomenclature Magnetic Flow Meter System Model Rosemount 8750W and Electrical Data

8750W	...	R	1	A	2	...	F	005	...	Z1	...	M4	...	AX	...	V1	...	RH50
I		II	III	IV	V		VI	VII		VIII		IX		X		XI		IX

Designation	Explanation	Value	Explanation
I	Model	8750W	Flow Meter System Model 8750W
II	Transmitter mount	R T	Remote mount Integral mount
III	Transmitter power supply	1 2	AC (90–250 Vac, 50/60 Hz), not for Ex nA DC (12–42 Vdc)
IV	Transmitter outputs	A M 0	4–20 mA with digital HART Protocol and scalable pulse output Modbus RS-485 Spare flow tube, no transmitter
V	Conduit entries	1 or 4 2 or 5	1/2–14 NPT female CM20, M20 female
VI	Electrode type	A, B, E, F 0	Seal of electrodes comply with IEC 61010-1. Spare transmitter, no flow tube
VII	Line size	005 to 480 000	1/2-in. NPS (15 mm) to 48-in NPS (1200 mm) Spare transmitter, no flow tube
VIII	Safety approvals	Z1 ATEX	⟨Ex⟩ II 3 GEx nA [ic] IIC T4 Gc(1) ⟨Ex⟩ II 3 GEx nA ic IIC T5...T4 Gc(2) ⟨Ex⟩ II 3 DEx tc IIIC T80 °C...T130 °C Dc(3)
		Z7 IECEx	Ex nA [ic] IIC T4 Gc(1) Ex nA ic IIC T5...T4 Gc(2) Ex tc IIIC T80 °C...T130 °C Dc(3)
		ND ATEX	⟨Ex⟩ II 3 D Ex tc IIIC T80 °C...T130 °C Dc(3)
		NF IECEx	Ex tc IIIC T80 °C...T130 °C Dc(3)
IX	Transmitter display	M4 M5	LOI Display
X	Transmitter discrete input/output	AX	Two discrete channels (DI/DO 1, DO 2)
XI	Specials paint	Vx	Special paint systems (4)
XII	Remote cable option	RTxx(5) RHxx(5)	Standard temperature component Extended temperature component

1. Model 8750W Transmitter DC Power Supply only.
2. Model 8750W Flow Tube only.
3. Model 8750W Transmitter AC and DC Power Supply and Model 8750W Flow Tube.
4. Subject to special conditions for safe use.
5. Length = xx min. 10-ft, max. 500-ft.

Instruction Sheet
Hoja de Instrucciones
Mode d'emploi

32W265 thru. 32W268
32W271 thru. 32W279

Read carefully before attempting to assemble, install, operate or maintain the product described. Protect yourself and others by observing all safety information. Failure to comply with instructions could result in personal injury and/or property damage! Retain instructions for future reference.

LISTED
Ind. Cont. Eq.
49AK

Dayton® Control Station
Estación de Control
Boîte de Commande à Boutons

PLASTIC(32W265,32W266,32W267,32W268,32W271,32W272, 32W273,32W274,32W275,32W276,32W277,32W279) **METAL(32W278)**

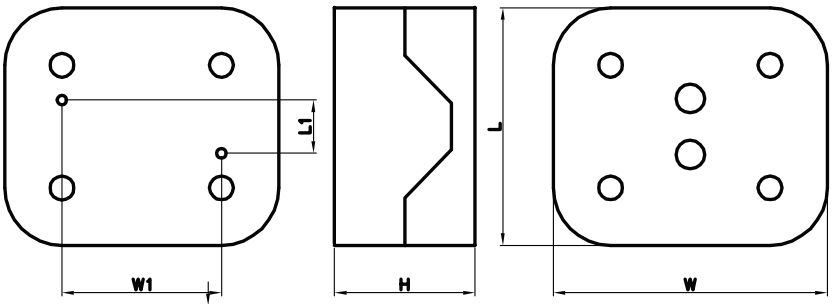

	1 HOLE / A TYPE (in / mm)	1 HOLE (in / mm)	2 HOLE (in / mm)	3 HOLE (in / mm)
H	2."/51	2."/51	2."/51	2."/51
W	2.83'/72	2.68"/68	2.68"/68	2.68'/68
L	2.83'/72	2.91"/74	4.09'/104	5.28"/134
W1	1.61'/41	2.13"/54	2.13"/54	2.13'/54
L1	2.32"/59	1.5"/38	2.68"/68	3.88'/98

	1 HOLE (in / mm)
H	2.'/51
W	2.68"/68
L	2.91"/74
W1	2.2"/56
L1	1.8"/46

*** = 1 HOLE**
2 HOLE
3 HOLE

Contact block connecting with wire guage:1X30AWG (0.5mm²).....2X16AWG(1.5mm²)
Póngase en contacto con bloque de conexión con cable calibre : 1X30AWG (0.5mm²).....2X16AWG(1.5mm²)
Contactez-bloc de connexion avec jauge de fil:1X30AWG (0.5mm²).....2X16AWG(1.5mm²)

ENGLISH

- Conduit hubs are to be connected to the conduit before being connected to the control station.
- Holes are not to be drilled in the rear wall of the control station.The requires removal of the extension frame to mount the control station.
- The control station opening to be filled by Push Button operator of Dayton or equivalent design of approved rated type NEMA4 or 4X as NEMA 250/UL50.
- To maintain environmental rating of this enclosure, install in any openings only UL listed or recognized conduits hubs or control devices with the same environmental rating as the enclosure, in compliance with the installation instructions of the device.

ESPAÑOL

- Concentradores de conducto se conecta al conducto antes de ser conectado a la estación de control.
- Los agujeros no son para ser perforado en la pared trasera de la station.The de control requiere la extracción del marco de extensión para montar la estación de control.
- La estación de control de apertura para ser llenado por el operador de botón pulsador de Dayton o diseño equivalente de tipo aprobado clasificar NEMA4 o 4X como NEMA 250/UL50.
- Para mantener la calificación ambiental de este gabinete, instale en ninguna de las aberturas sólo con certificación UL o reconocidos centros de conductos o dispositivos de control con la misma calificación ambiental del recinto, de acuerdo con las instrucciones de instalación del dispositivo.

FRANÇAIS

- Moyeux conduits doivent être raccordés à la conduite, avant d'être reliée à la station de commande.
- Les trous ne doivent pas être percés dans la paroi arrière de la station.The de contrôle nécessite la dépose du cadre de l'extension de monter la station de contrôle.
- La station de commande d'ouverture à remplir par l'opérateur à bouton-poussoir de Dayton ou de conception équivalente de la qualification de type approuvé NEMA4 ou 4X NEMA 250/UL50.
- Pour maintenir la cote de l'environnement de cette enceinte, installez-le dans les ouvertures que UL ou reconnu hubs conduits ou des dispositifs de contrôle de la même valeur que l'enceinte de l'environnement, en conformité avec les instructions d'installation de l'appareil.

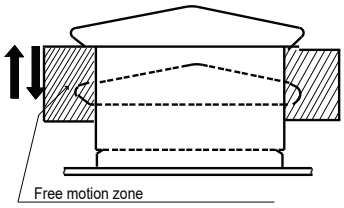

⚠ DANGER

These control stations does not provide grounding between conduit connections, use grounding bushings & jumper wires.

Estas estaciones de control no proporciona la conexión a tierra entre las conexiones de conducto, utilice casquillos de conexión a tierra y los cables umper.

Ces postes de contrôle ne fournit pas mise à la terre entre les connexions, utiliser des douilles à la terre et fils umper.

OBSTRUCTED PUSH BUTTON MOTION

1) Ensure Push Buttons will fully operate.
2) Failure to follow these instructions will result in death or serious injury.

PUSH OBSTRUIDO MOVIMIENTO BOTON

1) Asegúrese de botones de arranque totalmente funcionará.
2) El incumplimiento de estas instrucciones podrá causar la muerte o lesiones graves.

OBSTRUÉE MOTION BOUTON

1) S'assurer que boutons-poussoirs pleinement fonctionner.
2) Le non respect de ces instructions entraînera la mort ou des blessures graves.

Dayton®

Instruction Sheet/Hoja de Instrucciones/Mode d'emploi

32W265 thru. 32W268
32W271 thru. 32W279

ENGLISH

LIMITED WARRANTY

DAYTON ONE-YEAR LIMITED WARRANTY. Dayton™ Control Station, covered in this manual, are warranted by Dayton Electric Mfg. Co. (Dayton) to the original user against defects in workmanship or materials under normal use for one year after date of purchase. Any part which is determined to be defective in material or workmanship and returned to an authorized service location, as Dayton designates, shipping costs prepaid, will be, as the exclusive remedy, repaired or replaced at Dayton's option. For limited warranty claim procedures, see PROMPT DISPOSITION below. This limited warranty gives purchasers specific legal rights which vary from jurisdiction to jurisdiction.

LIMITATION OF LIABILITY. To the extent allowable under applicable law, Dayton's liability for consequential and incidental damages is expressly disclaimed. Dayton's liability in all events is limited to and shall not exceed the purchase price paid.

WARRANTY DISCLAIMER. Dayton has made a diligent effort to provide product information and illustrate the products in this literature accurately; however, such information and illustrations are for the sole purpose of identification, and do not express or imply a warranty that the products are MERCHANTABLE, or FIT FOR APARTICULAR PURPOSE, or that the products will necessarily conform to the illustrations or descriptions. Except as provided below, no warranty or affirmation of fact, expressed or implied, other than as stated in the "LIMITED WARRANTY" above is made or authorized by Dayton.

PRODUCT SUITABILITY. Many jurisdictions have codes and regulations governing sales, construction, installation, and/or use of products for certain purposes, which may vary from those in neighboring areas. While Dayton attempts to assure that its products comply with such codes, it cannot guarantee compliance, and cannot be responsible for how the product is installed or used. Before purchase and use of a product, review the product applications, and all applicable national and local codes and regulations, and be sure that the product, installation, and use will comply with them.

Certain aspects of disclaimers are not applicable to consumer products; e.g., (a) some jurisdictions do not allow the exclusion or limitation of incidental or consequential damages, so the above limitation or exclusion may not apply to you; (b) also, some jurisdictions do not allow a limitation on how long an implied warranty lasts, consequently the above limitation may not apply to you; and (c) by law, during the period of this Limited Warranty, any implied warranties of implied merchantability or fitness for a particular purpose applicable to consumer products purchased by consumers, may not be excluded or otherwise disclaimed.

PROMPT DISPOSITION. Dayton will make a good faith effort for prompt correction or other adjustment with respect to any product which proves to be defective within limited warranty. For any product believed to be defective within limited warranty, first write or call dealer from whom the product was purchased. Dealer will give additional directions. If unable to resolve satisfactorily, write to Dayton at address below, giving dealer's name, address, date, and number of dealer's invoice, and describing the nature of the defect. Title and risk of loss pass to buyer on delivery to common carrier. If product was damaged in transit to you, file claim with carrier.

ESPAÑOL

GARANTÍA LIMITADA

DAYTON POR UN AÑO DE GARANTÍA LIMITADA. Dayton ™ Control Station, cubierto en este manual, tienen garantía de Dayton Electric Mfg Co. (Dayton) al usuario original contra defectos de fabricación o materiales bajo un uso normal durante un año después de la fecha de compra. Cualquier parte que se determine que es defectuoso en material o mano de obra y devuelta a un centro de servicio autorizado, como Dayton, con los gastos de envío prepagados, será, como el remedio exclusivo, reparado o reemplazado, a opción de Dayton. Para los procedimientos de reclamo de garantía limitada, consulte OPORTUNA a continuación. Esta garantía limitada le da al comprador derechos legales específicos que varían de una jurisdicción a otra.

LIMITACIÓN DE LA RESPONSABILIDAD. En la medida permitida por la ley aplicable, la responsabilidad de Dayton por los daños emergentes o incidentales está expresamente excluida. Responsabilidad de Dayton en todos los eventos está limitada y no excederá el precio de compra pagado.

RENUNCIA DE GARANTÍA. Dayton se ha esforzado diligentemente para proporcionar información sobre el producto e ilustrar los productos de esta literatura en forma apropiada, sin embargo, la información y las ilustraciones son para el único propósito de identificación y no expresan ni implican garantía de que los productos son COMERCIAL, o ADECUADOS PARA PROPÓSITO PARTICULAR, o que los productos se ajustan necesariamente a las ilustraciones o descripciones. Salvo lo dispuesto más adelante, ninguna garantía o afirmación de hecho, expresa o implícita, aparte de lo indicado en la "GARANTÍA LIMITADA" está hecha o autorizada por Dayton.

APTITUD DEL PRODUCTO. Muchas jurisdicciones tienen códigos y reglamentos que rigen las ventas, construcción, instalación y / o uso de productos para ciertos propósitos, que pueden variar de los de las zonas vecinas. Si bien Dayton trata de que sus productos cumplan con dichos códigos, no puede garantizar su conformidad y no puede ser responsable de cómo el producto se instala o usa. Antes de la compra y el uso de un producto, revise las aplicaciones del producto, y todos los códigos nacionales y locales aplicables y regulaciones, y asegúrese de que el producto, la instalación y el uso cumplan con ellos.

Ciertos aspectos de limitación de responsabilidad no son aplicables a los productos de consumo, por ejemplo, (a) algunas jurisdicciones no permiten la exclusión o limitación de daños incidentales o consecuentes, por lo que la limitación o exclusión anterior puede no aplicarse en su caso, (b) además, algunas jurisdicciones no permiten la limitación de la duración de una garantía implícita, por tanto, la limitación anterior puede no aplicarse a usted, y (c) por ley, durante el período de esta garantía limitada, cualquier garantía implícita de comerciabilidad o aptitud para un propósito en particular aplicable a los productos de consumo adquiridos por los consumidores, no puede ser excluida o rechazada.

ATENCION OPORTUNA. Dayton hará un esfuerzo de buena fe para corregir puntualmente, o hacer otros ajustes con respecto a cualquier producto que resulte defectuoso dentro de la garantía limitada. Para cualquier producto defectuoso y que esté dentro de la garantía limitada, escriba o llame al distribuidor donde compró el producto. El distribuidor le dará instrucciones adicionales. Si no puede resolver de manera satisfactoria, escriba a Dayton a la dirección a continuación, el nombre del proveedor, dirección, fecha y número de la factura del distribuidor y describa la naturaleza del defecto. Título y riesgo de pérdida pasan al comprador en la entrega al transportista común. Si el producto se daña durante el transporte para usted, presentar una demanda con el portador.

FRANÇAIS

GARANTIE LIMITÉE

DAYTON UN AN GARANTIE LIMITÉE. Dayton ™ Control Station, décrites dans ce manuel, sont garantis par Dayton Electric Mfg Co. (Dayton) à l'utilisateur d'origine contre les défauts de fabrication ou de matériaux dans un usage normal pendant une année après la date d'achat. Toute partie qui est considéré comme étant défectueux dans le matériel ou de fabrication et retourné à un centre de service agréé, désigné par Dayton, frais de port prépayés, sera, comme le seul recours, réparé ou remplacé, au choix de Dayton. Pour les procédures de réclamation de la garantie, voir DISPOSITION RAPIDE ci-dessous. Cette garantie limitée donne aux acheteurs des droits légaux spécifiques qui peuvent varier d'une juridiction à l'.

LIMITATION DE RESPONSABILITE. Dans la mesure permise par la loi applicable, la responsabilité de Dayton pour les dommages indirects ou fortuits est expressément déclinée. Responsabilité de Dayton à tous les événements est limitée et ne dépasse pas le prix d'achat payé.

EXCLUSION DE GARANTIE. Dayton a fait des efforts diligents pour fournir des informations produit et illustrant les produits décrits dans cette brochure, cependant, de telles informations et les illustrations sont dans le seul but d'identification, et n'expriment ni n'impliquent que les produits sont MARCHANDE, ou FIT FOR USAGE PARTICULIER, ou que les produits sont nécessairement conformes aux illustrations ou descriptions. Sauf disposition contraire ci-dessous, aucune garantie ou affirmation de fait, expresse ou implicite, autre que celle indiquée dans la "GARANTIE LIMITÉE" ci-dessus est faite ou autorisée par Dayton.

De nombreuses juridictions ont des codes et règlements régissant la vente, la construction, l'installation et / ou l'utilisation de produits pour certains usages, qui peuvent varier de ceux des régions voisines. Alors que Dayton essaie de s'assurer que ses produits sont conformes aux codes, il ne peut pas garantir la conformité et ne peut pas être responsable de la façon dont le produit est installé ou utilisé. Avant l'achat et l'utilisation d'un produit, d'examiner les demandes de produits, et tous les codes nationaux et locaux applicables et aux règlements, et être sûr que le produit, l'installation et l'utilisation en accord avec eux.

Certains aspects de dénégations ne sont pas applicables aux produits de consommation, par exemple, (a) certaines juridictions n'autorisent pas l'exclusion ou la limitation des dommages indirects ou consécutifs, la limitation ou l'exclusion susmentionnée peut ne pas s'appliquer à vous; (b) En outre, certaines juridictions ne permettent pas de limitation sur la durée d'une garantie implicite, par conséquent la limitation ci-dessus peut ne pas s'appliquer à vous, et (c) de la loi, pendant la période de cette garantie limitée, toutes les garanties implicites de commercialisation ou d'adéquation à un usage particulier applicable aux produits de consommation achetés par les consommateurs, ne peut pas être exclue ou autrement désistées.

DISPOSITION RAPIDE. Dayton fera un effort de bonne foi pour corriger ou ajuster rapidement les autres à l'égard detout produit qui s'avère défectueux sous garantie limitée. Pour tout produit considéré défectueux sous garantie limitée, d'abord écrire ou appelez le revendeur auprès duquel le produit a été acheté. Le concessionnaire doit donner des instructions supplémentaires. S'il est impossible de résoudre de manière satisfaisante, écrire à Dayton, à l'adresse ci-dessous, en donnant le nom du revendeur, adresse, date et numéro de facture du concessionnaire, et en décrivant la nature du défaut. Titre et risque de perte passent à l'acheteur lors de la livraison par le transporteur. Si le produit a été endommagé pendant le transport, une réclamation auprès de déposer transporteur.

Mfd. for/Fab. para/Fab. pour:
Dayton Electric Mfg. Co. 100 Grainger Parkway, Lake Forest, Illinois 60045 USA.

Dayton®

Electrical Data

Standard reed switches in GEMS level switch units are hermetically-sealed, magnetically actuated, make-and-break type. Switches are SPST or SPDT and are rated in Volt-Amps (VA).

See the chart below for maximum load characteristics of GEMS level switches. CAUTION: Contact protection is required for transient or high in-rush current. Refer to GEMS Bulletin #133702 or call your GEMS representative.

VA	Volts	Amps AC	Amps DC
10 General Use	0-50	.2	.13
	120	.08	N.A.
	100	N.A.	.10
20 Pilot Duty	0-30	.4	.3
	120	.17	.13
	240	.08	.06
50 General Use	0-50	0.5	0.5
	120	.4	.4
	240	.2	.2
100*	120	.8**	N.A.
	240	.4	N.A.

* Not U.L. Recognized ** Limited to 50,000 operations

Typical Wiring Diagrams

(Circuit Condition Dry)

SPST, Normally Open or Closed

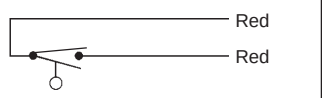

SPST, With Thermostat Option=

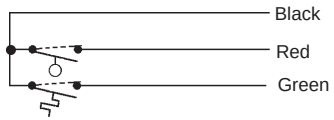

SPDT

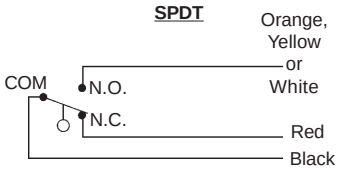

= Thermostat switches open or close when ambient temperature reaches specified setpoint. Thermostat units not CE approved.

European Pressure Directive Addendum

The product is designed and manufactured in accordance with Sound Engineering Practice as defined by the Pressure Equipment Directive 97/23/EC. This product must not be used as a "safety accessory" as defined by the Pressure Equipment Directive, Article 1, Paragraph 2.1.3. The presence of a CE Mark on the unit does not relate to the Pressure Equipment Directive.

CE This product is suitable for Class I and Class II applications only, per the requirements of standard EN60730 and any additional specific requirements for a particular application or medium being sensed. Class I compliance of metal bodied units requires a ground connection between the metal body and the earthing system of the installation. Class I compliance of plastic bodied units in contact with a conductive medium requires that the medium be effectively earthed so as to provide an earthed barrier between the unit and accessible areas. For Class III compliance, a supply at safety extra-low voltage (SELV) must be provided. Please consult the Factory for compliance information on specific part numbers.

Important Points!

Product must be maintained and installed in strict accordance with the National Electrical Code and GEMS product catalog and instruction bulletin. Failure to observe this warning could result in serious injuries or damages.

An appropriate explosion-proof enclosure or intrinsically safe interface device must be used for hazardous area applications involving such things as (but not limited to) ignitable mixtures, combustible dust and flammable materials.

*** Warning: To prevent ignition of flammable or combustible atmospheres, disconnect power before servicing.

Pressure and temperature limitations shown on individual catalog pages and drawings for the specified level switches must not be exceeded. These pressures and temperatures take into consideration possible system surge pressures/temperatures and their frequencies.

Selection of materials for compatibility with the media is critical to the life and operation of GEMS level switches. Take care in the proper selection of materials of construction; particularly wetted materials.

Life expectancy of switch contacts varies with applications. Contact GEMS if life cycle testing is required.

Ambient temperature changes do affect switch set points, since the specific gravity of a liquid can vary with temperature.

Level switches have been designed to resist shock and vibration; however, shock and vibration should be minimized.

Liquid media containing particulate and/or debris should be filtered to ensure proper operation of GEMS products.

Electrical entries and mounting points may require liquid/vapor sealing if located in an enclosed tank.

Level switches must not be field repaired.

Physical damaged sustained by the product may render it unserviceable.

P/N 72947
Rev. Y

Gems Sensors Inc.
One Cowles Road
Plainville, CT
06062.1198

tel 860.747.3000
fax 860.747.4244

Single-Station Level Switches

Instruction Bulletin No. 72947

Series	Mounting	HEX Size	Float Diameter
LS-1700**	1/8" NPT	1/2"	1" (Slosh Shield Version 1-13/32")
LS-1700TFE*	1/8" NPT	1/2"	1-1/8"
LS-1750**	1/8" NPT	1/2"	1-1/2" (Slosh Shield Version 1-13/16")
LS-1755**	1/8" NPT	1/2"	1-1/32"
LS-1800**	1/8" NPT	1/2"	1-1/4"
LS-1850**	1/2" NPT	3/4" Wrench Flat	3-1/2"
LS-1900**	1/4" NPT	5/8"	1-7/8"
LS-1900TFE*	1/4" NPT	21/32"	2-1/8"
LS-1950**	1/4" NPT	5/8"	2-1/16"
LS-19735*	1/4" NPT	5/8"	1-1/2"
LS-3*	1/8" NPT	1/2"	1"
	3/8" - 16 Str. Thd.	1/2"	1"
	1/8" NPT	1/2"	1-1/4" (Slosh Shield Version)
	1/8" NPT	1/2"	1-7/8" (P/N 76707)
	1/8" NPT	1/2"	3/4" (P/N 201540)
LS-30*	1/4" NPT	5/8"	1-7/8"
LS-38760**	1/4" NPT	9/16" Wrench Flat	1-7/8"
LS-74780*	1/4" NPT	5/8"	1-1/2"
LS-77700**	1/8" NPT	1/2"	1"
	3/8" - 24 Str. Thd.	3/4"	1-1/2"
TH 800-A*** Level Temp	1/4" NPT	5/8"	1-1/4"

*** Plastics** **** Alloys**

*** **Specialty Switches: Please use caution when handling these units, as shock may damage the thermostat temperature setting. Thermostat units not CE approved.**

Installation

A standard NPT female boss in tank top, bottom or side is all that is required. Units operate in any attitude - from the vertical to a 30° inclination - with lead wires up or down. Standard IPS pipe extends units to any intermediate level in the tank. ***(Figure 1)***

Moisture Protection: When moisture exists in conduit and extension pipes, the potential for this moisture to "wick" down the wire leads and into the switch assembly exists. Should this happen, the switch will appear to be closed due to a high resistance path through the moisture. The following suggestions may help to prevent this from happening:

1. Pitch conduit away from the level switch when possible, so that condensation will drip away from the level switch assembly. ***(Figure 2)***
2. When a vertical run of extension pipe is used to extend a level switch down from the top of the tank, a non-conductive silicone oil should be used to fill the vertical run. Alternatively, an appropriate potting may be used to fill the vertical run to occupy the space in which condensation will normally form. ***(Figure 3)***

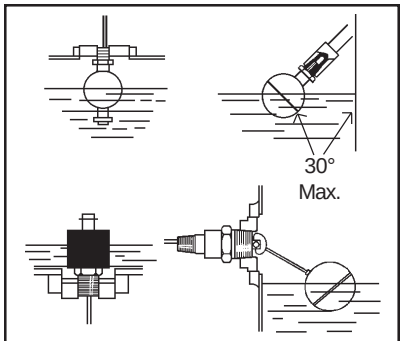

- Figure 1 -

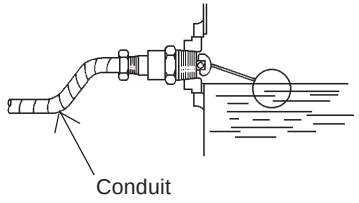

- Figure 2 -

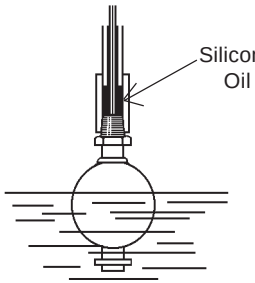

- Figure 3 -

CAUTION

Most of GEMS level products incorporate a potting cap or are fully potted. Due to the bonding characteristics of the potting to the wire leads, there is no way of assuring a water-tight seal at the potting joint. Our potting cap will resist moisture to some degree, but the precautions mentioned above should be used to assure moisture doesn't enter the switch and cause a short.

Consult your GEMS representative for more suggestions on how to lessen the effects of moisture.

Thread Treatment

1. Sealing: When threading metal threads into a metal coupling, pipe sealant or Teflon® tape is recommended. Due to potential compatibility problems, when sealing plastic threaded units, a compatible pipe sealant such as **No More Leaks**™ from Permatex® is recommended.
2. Tightening: When threading a plastic level switch into a metal coupling, the installer should use a suitable wrench and tighten the threads one to one and one-half additional turns past hand-tight. Over-torquing of the threads will result in damage to the plastic mounting plug.

No More Leaks is a trademark of Permatex® Industrial Corp., a subsidiary of Loctite Corporation. ***Teflon*** is a registered trademark of DuPont Corporation

3. The Effect of Thread Engagement on Actuation Points

The length of mounting threads engaged at installation is important in calculating switch actuation points and the actual length of stem extending into the tank. Use **the chart below** to find the thread engagement length (T) for a given NPT size. Factor the dimension into any calculation of switch actuation levels (L) and overall length (L_0).

NPT	1/8"	1/4"	1/2"	3/4"	1"	1-1/4"	2"	3"
T Dim.	.27"	.39"	.53"	.55"	.68"	.71"	.76"	1.20"

- See Examples Below -

Definition of Variables Used in Examples Below

A = Mounting Length
T = Thread Engagement
P = Distance from coupling (bung) top to inside surface of tank or bracket
L_0 = Overall length from bottom of mounting
L = Switch actuation level as measured from inside surface of tank or bracket to fluid surface
L_1 = Switch actuation level, nominal, as measured from bottom of mounting (based on a liquid specific gravity of 1.0)

Internally Mounted LS-1900
(Standard Length)

LS-1900 Series internally mounted through a 1/4" NPT hole. To calculate "L" dimension:

$L = L_1 + (A-T)$
$L = 1\text{-}3/16" + (21/32" - .39")$
$L = 1.46"$

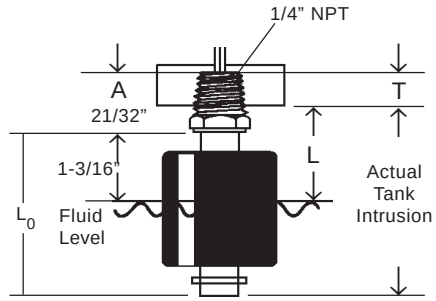

Internally Mounted LS-1700/1750
(Standard Length)

LS-1700/1750 internally mounted through a 1/8" NPT hole. To calculate "L" dimension:

$L = L_1 + (A-T)$
$L = .63" + (.56" - .27")$
$L = .92"$

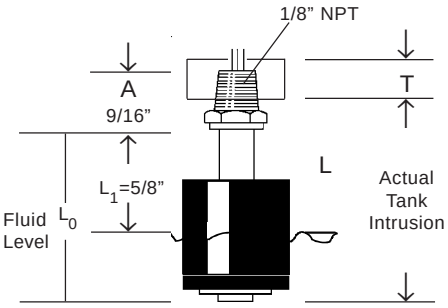

Small Size – Alloys

Rugged Durability, With Broad Heat and Pressure Capabilities, are Hallmarks of These Compact Switches

Ideal for shallow tanks or restricted spaces, or for low-cost, high volume use.

LS-1700 Series – Buna N Float

LS-1700 Series – Teflon® Float

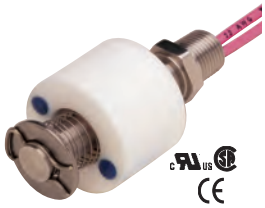

LS-1750 Series – All Stainless Steel

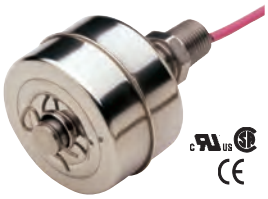

LS-1755 Series – All Stainless Steel

Offer broad chemical compatibility for general purpose use. Also ideal for oils and water.

Rugged construction suitable for most corrosive liquids, and for high temperatures and pressures. Stainless steel is generally recognized as safe (GRAS) with FDA for food contact regulations.

Dimensions

LS-1700 Series		LS-1750 Series	LS-1755 Series
Buna N Float	Teflon® Float	Stainless Steel Float and Stem	
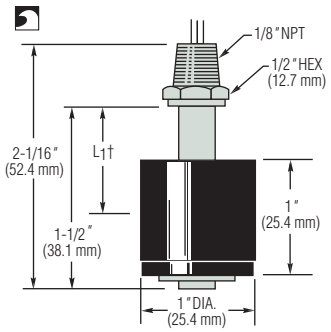	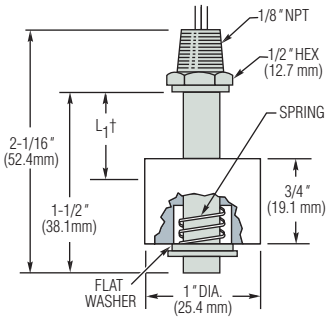	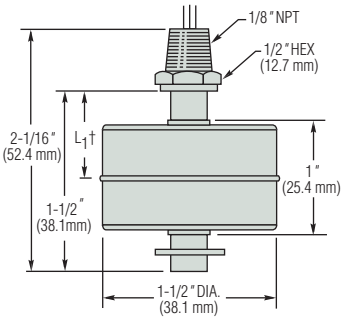	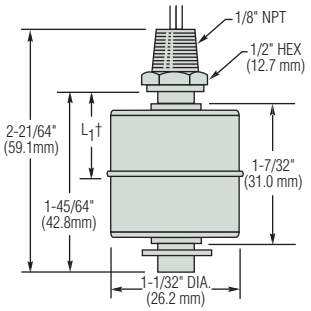
L_1= 9/16˝ (14.2 mm) N.O.; 13/16˝ (20.6 mm) N.C.	L_1= 1/2˝ (12.7 mm) N.O. and N.C.	L_1= 5/8˝ (15.7 mm) N.O.; 3/4˝ (19.1 mm) N.C.	L_1= 37/64˝ (14.5 mm) N.O.; 53/64˝ (20.8 mm) N.C.

†L_1= Switch actuation level, nominal (based on a liquid specific gravity of 1.0).

Common Specifications

Electrical Termination: No. 22 AWG, 24˝ L., Polymeric Lead Wires, (except Part No. 79990 which has Teflon® Lead Wires).

Approvals: Series Nos. LS-1700, LS-1750 and LS-1755 are U.L. Recognized – File No. E45168 and CSA Listed – File No. 30200.

Switch Operation: Units are shipped N.O. unless otherwise specified. Selectable, N.O. or N.C., by inverting float on unit stem (except for LS-1700 Series switches with Teflon® Floats; see selection in "How to Order" table).

How To Order – Select Part Number based on specifications required.

	Material							
Series Number	Stem and Mounting	Float	Other Wetted	Min. Liquid Sp. Gr.	Operating Temperature	Pressure, PSI, Max.**	Switch* SPST	Part Number
LS-1700	Brass	Buna N	316 S.S., Epoxy	.45	Water: to 180°F (82.2°C) Oil: -40°F to +300°F (-40°C to +149°C)	300	20 VA	**01701**
	316 S.S.						20 VA	**01702**
	316 S.S.	Teflon®		.85	-40°F to +250°F (-40°C to +121.1°C)	1000	20 VA, N.O.	**26791**
							20 VA, N.C.	**27980**
LS-1750	316 S.S.	316 S.S.	316 S.S.	.70	-40°F to +300°F (-40°C to +148.9°C)	100	20 VA	**01750**
					-40°F to +480°F (-40°C to +204.4°C)		20 VA	**79990**
LS-1755	316 S.S.	316 S.S.	316 S.S.	.90	-40°F to +300°F (-40°C to +148.9°C)	275	20 VA	**01755**

* See "Electrical Data" on Page X-5 for more information.
** Higher pressures are temperature dependent.

Large Size – Engineered Plastics

LS-800PVC Series – Our Most Economical Large Size Unit

- NSF Approved All-PVC Wetted Parts Available
- 1 to 7 Actuation Levels
- Lengths to 60 inches

Inexpensive, all-PVC LS-800PVC Series switches bring reliable level sensing to corrosive liquids. These durable, yet economical, switches use the same high-quality, dependable reed switches found in GEMS' most expensive models. NSF-approved wetted parts make the LS-800PVC suitable for potable water applications.

ORDER IT!
Ordering is Easy! See Page B-26.
Easy online ordering too!

1. Mounting Types

	Type 1 1/2" NPT	Type 3 2" NPT	Type 4 3", 150# Flange
		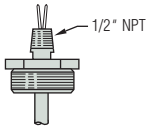	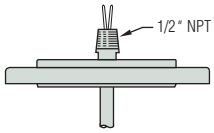
Mounting and All Wetted Parts	PVC		
Operating Temperatures	0°F to 125°F (-17.8°C to 51.7°C)		
Pressure, PSI, Max.	15 @ 70°F (21°C)		
Max. Length (Lo)	60 inches (152.4cm)		
Mounting Position	Vertical ±30° Inclination		

2. Float Type

Float Material	PVC*	Buna N
Float Dimensions	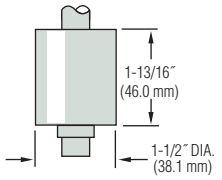	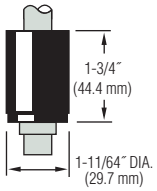
Float Part Number	**16306**	**142251**
Min. Liquid Specific Gravity	0.85	0.80

*Select for potable water applications.

LS-800PVC Series – Continued

3. Number of Actuation Levels and Electrical Specifications

Typically, one float is required for each point at which you need a switch action to occur. The number of actuation levels available depends on type of wiring selected. See below.

Group I Wiring: 1 to 7 Actuation Levels

Group II Wiring: 1 to 4 Actuation Levels

Group III Wiring: 1 to 3 Actuation Levels

Group IV Wiring: 1 to 2 Actuation Levels

Switch (N.O. or N.C.):

SPST: 20 VA or 100 VA

SPDT: 20 VA

Lead Wires: #22 AWG, 24˝ L., PVC

Typical Wiring Diagrams

For clarity, only two actuation levels are shown in each group diagram.

GROUP I SPST | GROUP II SPST | GROUP III SPDT | GROUP IV SPDT

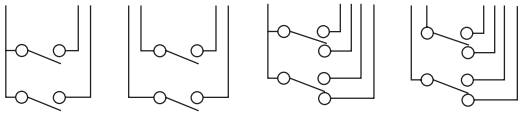

Wiring Color Code

SPST Switches				SPDT Switches 20 VA				
Wiring	**Group I**	**Group II**		**Group III**		**Group IV**		
Com. Wire	Black	None		Black		None		
	NO/NC	SW. Com.	NO/NC	NO	NC	SW. Com.	NO	NC
L1	Red	Red	Red	Red	Wh/Red	Red	Wh/Red	Wh/Blk/Red
L2	Yellow	Yellow	Yellow	Yellow	Wh/Yel	Yellow	Wh/Yel	Wh/Blk/Yel
L3	Blue	Blue	Blue	Blue	Wh/Blue			
L4	Brown	Brown	Brown					
L5	Orange							
L6	Gray							
L7	White							

Notes: See “Electrical Data” on Page X-5 for more information.

4. Actuation Level Dimensions

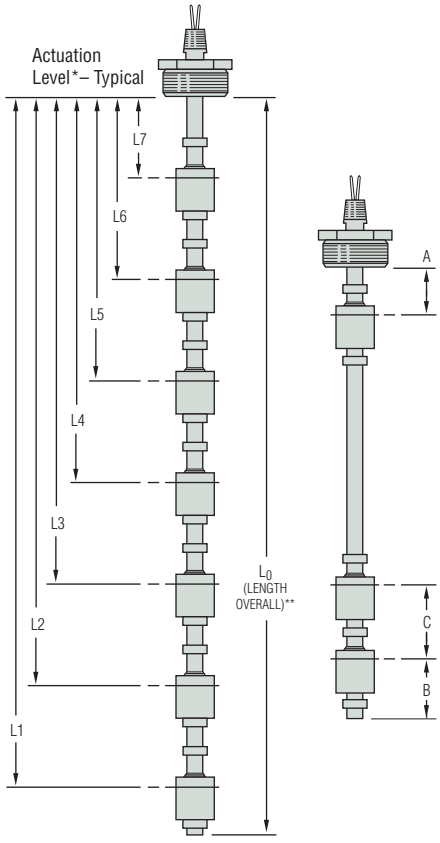

* Actuation level distances and L_0 (overall unit length) are measured from inner surfaces of mounting plug or flange.

** Length Overall (L_0) = L_1 + Dimension B. See Mounting Types for Maximum Length values.

Switch actuation levels are determined following the guidelines below.

A = 1-1/2˝ (38.1 mm) Minimum distance to highest actuation level.

B = 2˝ (50.8 mm) Minimum distance from end of unit to lowest actuation level.

C = 3˝ (76.2 mm) Minimum distance between actuation levels.

Notes:

1. Actuation levels are calibrated on descending fluid level, with water as the calibrating fluid, unless otherwise specified.
2. A and B dimensions based on a top mounted unit.
3. Float stops are permanently cemented in place.
4. Tolerance on actuation levels is ±1/8˝ (3.2 mm).
5. Dimensions based on a liquid specific gravity 1.0.

Kari (KA) Level Float Switch

S (Standard) Series

C Series

M Series

CE RoHS Compliant c SP us

Kari cable suspended float switches are capable of up to four switching levels in a single float, and offer 25 different configurations - including some with built in hysteresis. That means you can replace up to four single level float switches with one 4-point level switch. Kari offers high chemical compatibility and durable components built to outlast any other.

Features

- Up to 4 switching levels
- Optional built-in hysteresis
- 25 configurations
- Mercury and Lead free
- High chemical compatibility
- Proven reliability in operation
- Cost effective

Quick Specs

- Max Voltage: 250 VAC or DC
- Temperature: Up to 175°F
- Float Material: Polypropylene
- Cable Material: PVC (standard), Polypropylene, Rubber, Teflon®
- IP67, NEMA 6
- CE, CSA General Purpose

The World's Most Versatile & Reliable Float Switch

Patented One Float, Multi-Switch Design

Want to make it easier to work with float switches? Want to avoid tangled floats? Kari float switches have up to four switch points in a single float.

This simplifies installation, avoids maintenance, and enhances reliability.

Stop messing around with tangles of multiple floats and streamline with Kari and APG.

Unparalleled Reliability

Many report the typical lifespan of a competitor cable suspended float switch to be about four years. We still have Kari floats in the field from 20 years ago.

These workhorses just keep going, much longer than your run-of-the-mill float switch.

You get uninterrupted service and a much lower cost of ownership in an easy-to-use package.

Easy Switch Level Adjustment

The different activation levels within the float are easy to adjust by lengthening the cable and moving the weight. The closer the weight to the float, the tighter the switching differential - or the closer the switching levels are to each other.

An example of a discharge function, with the four-point 4H switch model.

Plug & Play

25 Configurations, Built-In Hysteresis

Kari float switches come purpose built for a variety of unique applications with 25 different configurations. The diagram below descibes the function and available size of each model.

Unlike any other float switch on the market, several models include built-in hysteresis. The float handles the logic all by itself - making them ideal for backup pump control applications and reducing the need for expensive controllers.

If you can wire a simple switch (and we can help you with that), then you can achieve complex pump control behavior with a single Kari float switch.

Kari Float Switch Models			Model		
Type	Description	Hysteresis	M Ø 3 in	C Ø 3.9 in	S Ø 6.7 in
1H	High alarm or valve control		▲	▲	▲
1HE	Dual high alarm		▲	▲	▲
2H	Empty pump control	▲	▲	▲	▲
2Y	Empty pump control			▲	▲
3H	Empty pump control + high alarm	▲		▲	▲
3Y	Empty pump control + high alarm			▲	▲
3HE	Empty pump control + isolated high alarm	▲		▲	▲
3YE	Empty pump control + isolated high alarm				▲
4H	Empty pump control + high and low alarm	▲			▲
4H5E	Duplex empty pump control + isolated high alarm	▲			▲
4Y	Empty pump control + high and low alarm				▲
4Y39	4 level empty pump control				▲
1L	Low alarm or valve control		▲	▲	▲
1LE	Dual low alarm or valve control		▲	▲	▲
2L	Fill pump control	▲	▲	▲	▲
2A	Fill pump control			▲	▲
3L	Fill pump control + low alarm	▲		▲	▲
3A	Fill pump control + low alarm				▲
3LE	Fill pump control + isolated low alarm	▲		▲	▲
3AE	Fill pump control + isolated low alarm				▲
4L	Fill pump control + low and high alarm	▲			▲
4L5E	Duplex fill pump control + isolated low alarm	▲			▲
4A	Fill pump control + low and high alarm				▲
1C	High or low alarm, change-over switch		▲	▲	▲
2HL	High and low alarm			▲	▲

Model Selection Guide

Empty Control (Form A)

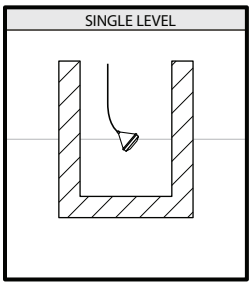

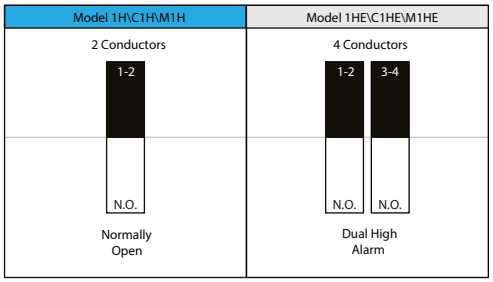

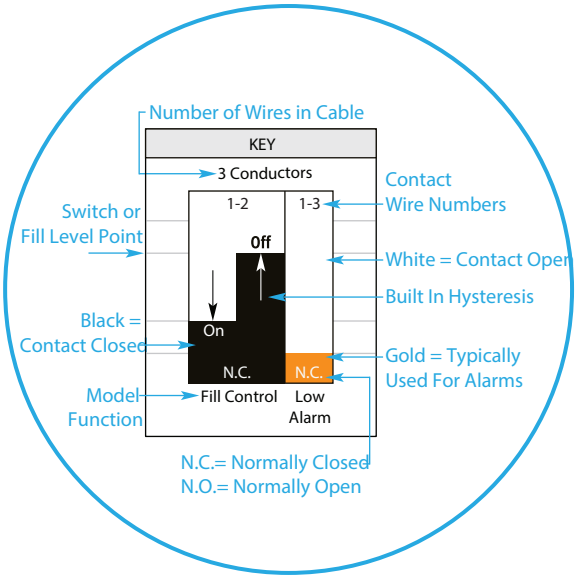

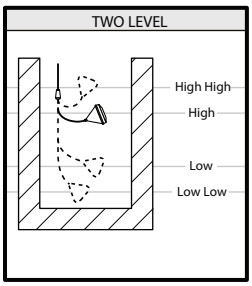

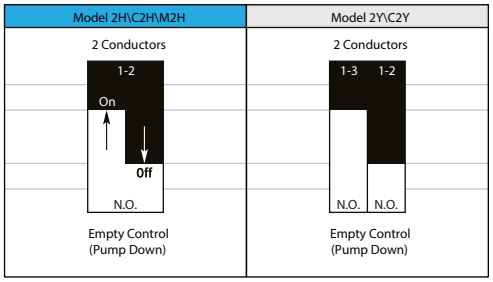

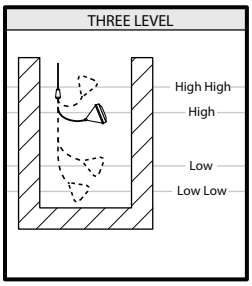

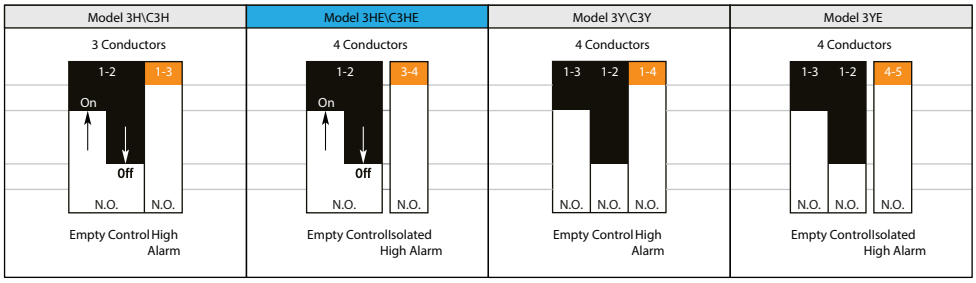

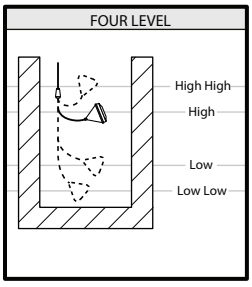

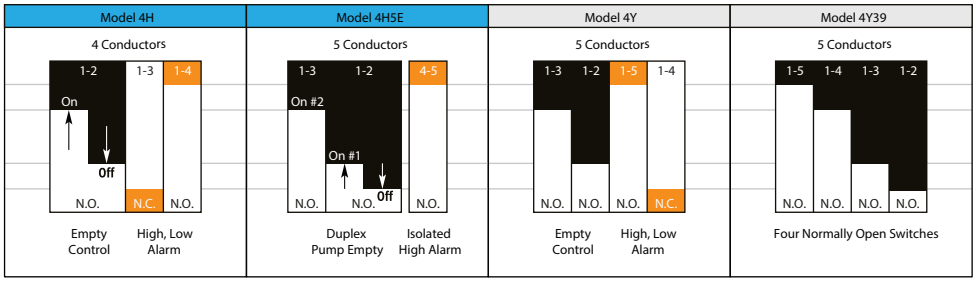

Popular Models *(marked in blue above)*

Model Number	Model Description
KA-1H/M1H	One switch, NO
KA-2H/M2H	Two switch, NO, hysteresis
KA-3HE	Three switch, NO, hysteresis, isolated alarm
KA-4H	Four switch, NO, hysteresis, hi/low alarms
KA-4HE	Four switch, NO, hystesis, duplex control, isolated alarm

Ideal For Lift Stations

One long-lasting float for complex pump control. The only smart choice for float switches in lift stations.

Fill Control (Form B)

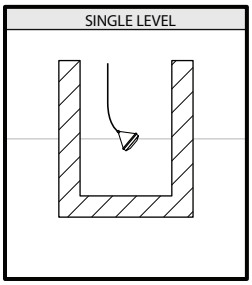

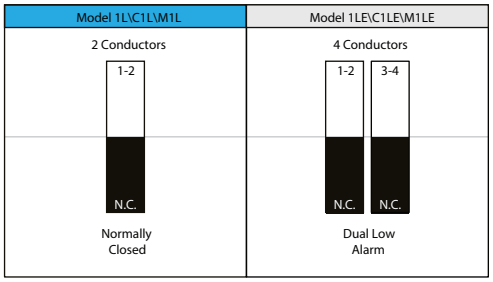

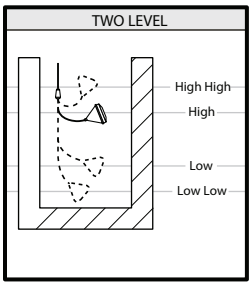

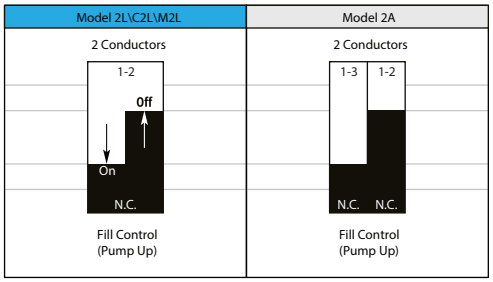

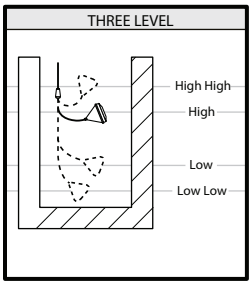

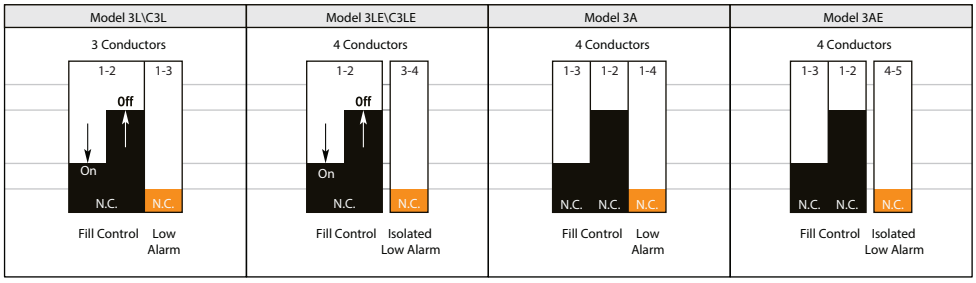

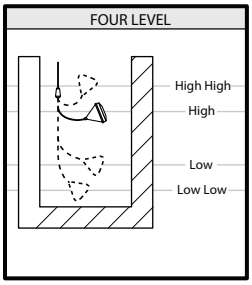

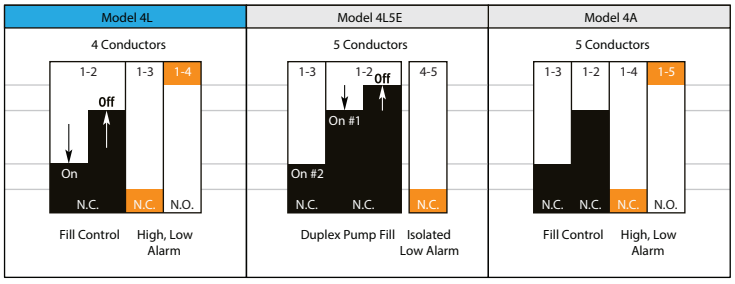

Other

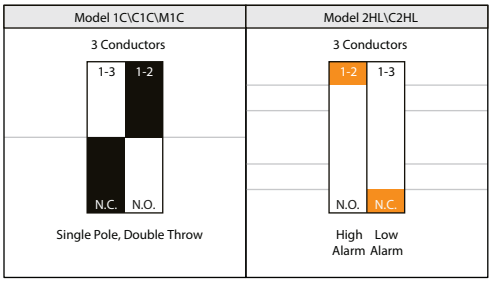

The diagrams show the action of each Kari float switch model, organized by basic application type. Use the key to interpret each diagram. Contact Automation Products Group, Inc. for help selecting the right model.

Popular Models *(marked in blue above)*

Model Number	Model Description
KA-1L/M1L	One switch, NC
KA-2L/M2L	Two switch, NC, hysteresis
KA-4L	Four switch, NC, hysteresis, hi/low alarms

Perfect Backup

Two level control with built-in hysteresis, wired to the motor starter. What more could you ask for?

Specifications

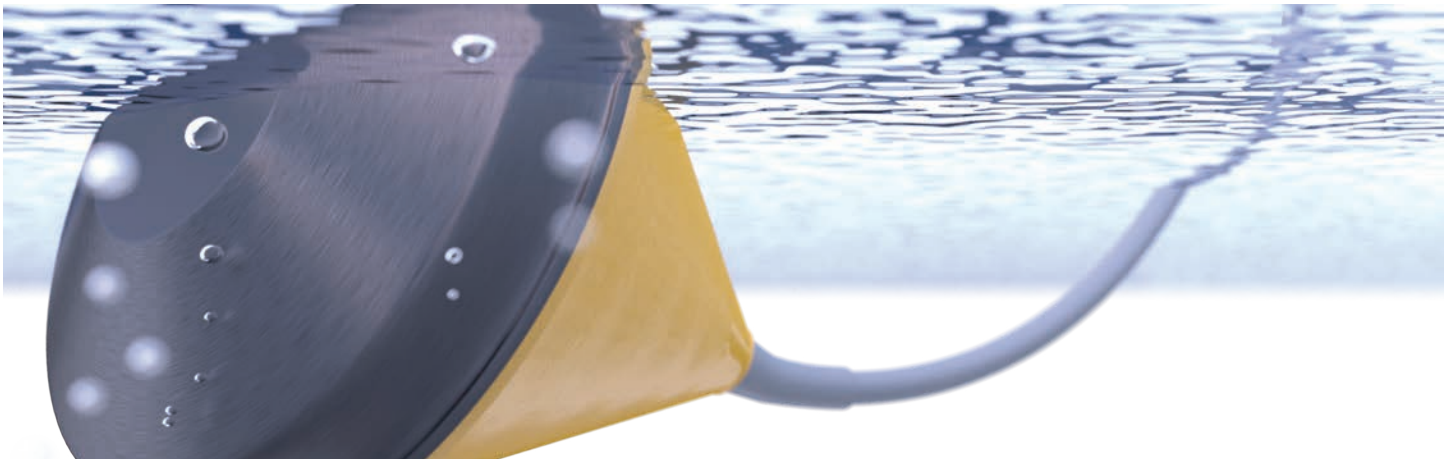

Performance

- Switching Differential:
  - Standard: Min: 10 in. - Max: 50 in.
  - Optional: Min. 2.5 in - 75 in. (60 in. M series)
- Maximum Pressure: 28 psi (2 bar)

Connectivity

- Cable: Up to 5 wires

Environmental

- Max. Liquid Temperature:
  - Standard: 130°F (54°C)
  - Optional: 175°F (80°C)
- Protection Rating:
  - IP67
  - NEMA 6

Certification

- CSA General Purpose
- CE

Electrical

- Maximum Voltage: 250 VAC or DC
- Maximum AC Current (Resistive): 6 A
- Maximum AC Current (Inductive): 3 A
- Maximum DC Power: 75 VA (0.3 A @ 250 V)

Physical

- Minimum Fluid Specific Gravity:
  - 0.7 for Standard float
  - 0.95 for Mini float
- Standard Cable Lengths:
  - 5m (16 ft)
  - 15m (49 ft)
- Weight: 1.3 - 4 lbs (varies on type)
- Float - Polypropylene
- Cable
  - Standard: PVC
  - Optional: Rubber
    - PTFE (Teflon®)
    - TPU (Oil resistant)

Model Configuration Options

Model Number: KA - _____ - _____ - _____ - _____
A B C D

A. Model and Function

Null-Large, **C**-Medium, **M**-Mini

Ex. 1H (Large), C1H (Medium), M1H (Mini)

- ☐ **__1L** Low Alarm
- ☐ **__1H** High Alarm
- ☐ **__1C** High / Low Alarm
- ☐ **__1LE** Dual Low Alarm*
- ☐ **__1HE** Dual High Alarm*

Note: A cable weight does not come with single level floats.

Null-Large, **C**-Medium, **M**-Mini

Ex. 2H (Large), C2H (Medium), M2H (Mini)

- ☐ **__2L** Hysteresis Fill Control (pump Up)
- ☐ **__2H** Hysteresis Empty Control (Pump Down)
- ☐ **__2Y** Empty Control (Pump Down)*
- ☐ **__2A** Fill Control (Pump Up)*

*Function not available with M-Series model.

Null-Large, **C**-Medium

Ex. 3H (Large), C3H (Medium)

- ☐ **__2HL** High and Low Alarm
- ☐ **__3L** Hysteresis Fill + Low Alarm
- ☐ **__3H** Hysteresis Empty + High Alarm
- ☐ **__3Y** Empty Control + High Alarm
- ☐ **__3LE** Hysteresis Fill + Isolated Low Alarm
- ☐ **__3HE** Hysteresis Empty + Isolated High Alarm

Note: Use the **M**-Mini option if no suspended solids are present, the specific gravity of the liquid is greater than 0.95 and no more than two switch points are needed.

Null-Large

Ex. 3Y (Large), only available in large size

- ☐ **3A** Fill Control + Low Alarm
- ☐ **3AE** Fill Control + Isolated Low Alarm
- ☐ **3YE** Empty Control + Isolated High Alarm
- ☐ **4A** Fill + High and Low Alarm (5 conductor)
- ☐ **4L** Hysteresis Fill + High and Low Alarm (4 conductor)
- ☐ **4Y** Empty + High and Low Alarm (5 conductor)
- ☐ **4H** Hysteresis Empty + High and low Alarm (4 conductor)
- ☐ **4L5E** Duplex Pump Fill + Isolated Low Alarm
- ☐ **4H5E** Duplex Pump Empty + Isolated High Alarm
- ☐ **4Y39** Lead/Lag Pump Control + High and Low Alarm

B. High Temperature Option

- ☐ **(Null)** Standard 130°F (55°C)
- ☐ **K** High Temperature 175°F (80°C)

C. Cable Option

- ☐ **(Null)** PVC
- ☐ **A** Rubber
- ☐ **T** PTFE (Teflon®)
- ☐ **N** TPU (Oil Resistant)

D. Cable Length

- ☐ **(Null)** 16 ft. (5 m) cable standard
- ☐ **_L** (specify in meters)

Kari Accessories

Please order separately, by part number.

Description	Part Number
Kari A weight - PP covered 3/4lb (400g) - 4.3 in X 2.2 in	122039
Kari B weight - PP covered 1 1/2lb (700g) - 5.2 in X 3 in	122040
Kari C weight - PP covered 2 1/4lb (1Kg) - 5.2 in X 3 in	122042

APG & Kari-Finn

In the 1960's, Kari-Finn Oy developed a method to install four switches in a single float. They patented the product and changed the world of simple level control forever.

At APG, we fell in love with the Kari-Finn and their innovative float switch. It fits perfectly with our passion for making high quality sensors for reliable level and pressure measurement and control.

We have long had a relationship of trust based on mutual values. We're the exclusive distributor of Kari float switches in North America.

Lift Stations

While the Kari float switch can be used in a myriad applications, it's extremely well suited for lift stations. A single float can control a duplex pumping station with built-in hysteresis.

Backup Pump Control

The KA-2H and KA-2L models are ideal for backup pump control. They have built-in hysteresis (no need for a controller to provide this logic) and can be wired directly to the motor starter.

These floats are perfect for any backup pump control application in almost any tank or vessel.

You can find us on Twitter (@apgsensors), Facebook (APGsensors), and LinkedIn (Automation Products Group, Inc.).

For questions about Kari or APG, contact us using the information below. We also have live chat on our website.

Level TROLL® 400, 500 & 700 Data Loggers

Get water level data the way you want it, when you want it with industry-leading water level/pressure and temperature data loggers. By partnering with In-Situ, you receive durable Level TROLL® Data Loggers that provide years of service, accurate results, intuitive software, and real-time functionality. Use the VuSitu™ Mobile App to manage your data on your smartphone or tablet.

Be Effective

- **Increase productivity:** Reduce training and installation time with In-Situ's intuitive software platform and integrated components. Patented twist-lock connectors, included on Level TROLL Data Loggers and RuggedCable® Systems, ensure error-free deployments.
- **Streamline data management:** Use the VuSitu Mobile App to consolidate all site information on your smartphone, and tag data with site photos and GPS coordinates. Simply connect the instrument to a Wireless TROLL Com or power pack, launch the mobile app, and start reading results. The mobile app guides you through instrument and log setup, and data management. Log data to your smartphone and download results in a standard .csv file format.
- **Set up real-time networks:** Access data 24/7 and receive event notifications when you connect data loggers to Tube and Cube Telemetry Systems, HydroVu Data Services, or other third-party data collection platforms.

Be In-Situ

- **Receive 24/7 technical support and online resources.**
- **Order data loggers and accessories from the In-Situ website.**
- **Get guaranteed 7-day service for maintenance (U.S.A. only).**

Be Reliable

- **Deploy in all environments:** Install loggers in fresh water, saltwater, and contaminated waters. Solid titanium and sealed construction outperforms and outlasts specially coated data loggers.
- **Log accurate data:** Get optimal accuracy under all operating conditions. Sensors undergo NIST®-traceable factory calibration across the full pressure and temperature range. For applications requiring the highest levels of accuracy, use a vented (gauged) system.
- **Get long-lasting operation:** Reduce trips to the field with low-power loggers that typically operate for 10 years.

Applications

- **Aquifer characterization: slug tests & pumping tests**
- **Coastal: tide/harbor levels & wetland/estuary research**
- **Hydrologic events: crest stage gages, storm surge monitoring, & flood control systems**
- **Long-term, real-time groundwater & surface water monitoring**
- **Mining & remediation**

CALL OR CLICK TO PURCHASE OR RENT
1-800-446-7488 (toll-free in U.S.A. and Canada)
1-970-498-1500 (U.S.A. and international)
WWW.IN-SITU.COM

General	Level TROLL 400	Level TROLL 500	Level TROLL 700	Level BaroTROLL
Temperature ranges [1]	Operational: -20 to 80° C (-4 to 176° F) Storage: -40 to 80° C (-40 to 176° F) Calibrated: -5 to 50° C (23 to 122° F)	Operational: -20 to 80° C (-4 to 176° F) Storage: -40 to 80° C (-40 to 176° F) Calibrated: -5 to 50° C (23 to 122° F)	Operational: -20 to 80° C (-4 to 176° F) Storage: -40 to 80° C (-40 to 176° F) Calibrated: -5 to 50° C (23 to 122° F)	Operational: -20 to 80° C (-4- to 176° F) Storage: -40 to 80° C (-40 to 176° F) Calibrated: -5 to 50° C (23 to 122° F)
Diameter	1.83 cm (0.72 in.)	1.83 cm (0.72 in.)	1.83 cm (0.72 in.)	1.83 cm (0.72 in.)
Length	21.6 cm (8.5 in.)	21.6 cm (8.5 in.)	21.6 cm (8.5 in.)	21.6 cm (8.5 in.)
Weight	124 g (0.27 lb)	124 g (0.27 lb)	124 g (0.27 lb)	124 g (0.27 lb)
Materials	Titanium body; Delrin® nose cone	Titanium body; Delrin nose cone	Titanium body; Delrin nose cone	Titanium body; Delrin nose cone
Output options	Modbus/RS485, SDI-12, 4 to 20 mA	Modbus/RS485, SDI-12, 4 to 20 mA	Modbus/RS485, SDI-12, 4 to 20 mA	Modbus/RS485, SDI-12, 4 to 20 mA
Battery type & life [2]	3.6V lithium; 10 years or 2M readings	3.6V lithium; 10 years or 2M readings	3.6V lithium; 10 years or 2M readings	3.6V lithium; 10 years or 2M readings
External power	8 to 36 VDC	8 to 36 VDC	8 to 36 VDC	8 to 36 VDC
Memory *Data records* [3] *Data logs*	2.0 MB 120,000 50 logs	2.0 MB 120,000 50 logs	4.0 MB 250,000 50 logs	1.0 MB 60,000 2 logs
Fastest logging rate	2 per second	2 per second	4 per second	1 per minute
Fastest output rate	Modbus: 2 per second SDI-12 & 4 to 20 mA: 1 per second	Modbus: 2 per second SDI-12 & 4 to 20 mA: 1 per second	Modbus: 2 per second SDI-12 & 4 to 20 mA: 1 per second	Modbus: 2 per second SDI-12 & 4 to 20 mA: 1 per second
Log types	Linear, Fast Linear, and Event	Linear, Fast Linear, and Event	Linear, Fast Linear, Linear Average, Event, Step Linear, True Logarithmic	Linear
Sensor Type/Material	**Piezoresistive; titanium**	**Piezoresistive; titanium**	**Piezoresistive; titanium**	**Piezoresistive; titanium**
Range	Absolute (non-vented) 30 psia: 11 m (35 ft) 100 psia: 60 m (197 ft) 300 psia: 200 m (658 ft) 500 psia: 341 m (1120 ft)	Gauged (vented) 5 psig: 3.5 m (11.5 ft) 15 psig: 11 m (35 ft) 30 psig: 21 m (69 ft) 100 psig: 70 m (231 ft) 300 psig: 210 m (692 ft) 500 psig: 351 m (1153 ft)	Absolute (non-vented) 30 psia: 11 m (35 ft) 100 psia: 60 m (197 ft) 300 psia: 200 m (658 ft) 500 psia: 341 m (1120 ft) 1000 psia: 693 m (2273 ft) Gauged (vented) 5 psig: 3.5 m (11.5 ft) 15 psig: 11 m (35 ft) 30 psig: 21 m (69 ft) 100 psig: 70 m (231 ft) 300 psig: 210 m (692 ft) 500 psig: 351 m (1153 ft)	30 psia (usable up to 16.5 psi; 1.14 bar)
Burst Pressure	Max. 2x range; burst > 3x range	Max. 2x range; burst > 3x range	Max. 2x range; burst > 3x range	Vacuum/over-pressure above 16.5 psi damages sensor
Accuracy at 15° C [4] *Accuracy at Full Scale* [5]	±0.05% full scale (FS) ±0.1% FS	±0.05% FS ±0.1% FS	±0.05% FS ±0.1% FS	±0.05% FS ±0.1% FS
Long-Term Stability [6]	<0.1% FS	<0.1% FS	<0.1% FS	<0.1% FS
Resolution	±0.005% FS or better	±0.005% FS or better	±0.005% FS or better	±0.005% FS or better
Units of measure	Pressure: psi, kPa, bar, mbar, mmHg, inHg, cmH2O, inH2O Level: in., ft, mm, cm, m	Pressure: psi, kPa, bar, mbar, mmHg, inHg, cmH2O, inH2O Level: in., ft, mm, cm, m	Pressure: psi, kPa, bar, mbar, mmHg, inHg, cmH2O, inH2O Level: in., ft, mm, cm, m	Pressure: psi, kPa, bar, mbar, mmHg, inHg, cmH2O, inH2O Level: in., ft, mm, cm, m
Temperature Sensor	**Silicon**	**Silicon**	**Silicon**	**Silicon**
Accuracy	±0.1° C	±0.1° C	±0.1° C	±0.1° C
Resolution	0.01° C or better	0.01° C or better	0.01° C or better	0.01° C or better
Units of measure	Celsius or Fahrenheit	Celsius or Fahrenheit	Celsius or Fahrenheit	Celsius or Fahrenheit
Warranty [7]	**3 years**	**3 years**	**3 years**	**3 years**
Notes	[1] Temperature range for non-freezing liquids. [2] Typical battery life when used within the factory-calibrated temperature range. [3] 1 data record = date/time plus 2 parameters logged for a total of 360,000, 750,000, and 180,000 data points. (No wrapping) [4] Across factory-calibrated pressure range. [5] Across factory-calibrated pressure and temperature ranges. [6] Includes linearity and hysteresis over 1 year. [7] Up to 5-year (total) extended warranties are available for all sensors. Delrin is a registered trademark of E.I. du Pont de Nemours and Company. Specifications are subject to change without notice.			

Every Application & Budget

Use maintenance-free, non-vented systems for long-term monitoring and at flood-prone or high-humidity sites. Pair with Tube and Cube Telemtry Systems and HydroVu Data Services for automtatic barometric compensation.

Use high-accuracy, vented systems to conduct aquifer tests and to view barometrically compensated water level data in real time.

Get real-time, decision-quality data on your remote monitoring sites anytime, anwhere with cloud-based HydroVu Data Services. Easy setup, viewing, and analysis of your data means you get more from your instruments for less time and money.

BaroTROLL® Data Logger

When using a non-vented system, collect barometric pressure and temperature data with a titanium BaroTROLL Data Logger in order to post correct data for barometric pressure fluctuations.

Calculating barometric efficiency? Use the BaroTROLL Logger with vented systems.

Copyright © 2017 In-Situ Inc. All rights reserved. Aug 2017

Bray CONTROLS

PNEUMATIC
Actuators & Accessories

Pneumatic Actuators & Accessories

		Page
Series 92/93	Pneumatic Actuator	**4**
Series 63	Solenoid - Direct Mount	**6**
Series 50	Valve Status Monitor Limit Switch	**8**
Series 52	Valve Status Monitor Limit Switch	**10**
Series 6A	Electro-Pneumatic Positioner	**12**
Series 6P	Pneumatic Positioner	**14**
Series 55	Filter Regulator	**15**

Bray CONTROLS

INTRODUCTION

Through years of field application experience, research and development, we have designed products that meet the stringent requirements of today's fluid process industry. Bray has earned a reputation of excellence by creating products of superior value and quality, providing personalized customer service and on-time deliveries. Our success has always been the direct result of our fully integrated, full range butterfly valve and control product lines. Rugged and reliable, our products are engineered to provide years of trouble free service.

Bray products are used in a wide range of industries worldwide including:

- Chemical
- Beverages
- Pharmaceuticals
- Food Processing
- Petroleum Refining & Oilfield
- Transportation
- Microprocessors
- Marine
- Pulp & Paper
- Mining
- Power/FGD
- Irrigation
- Water & Wastewater Treatment
- Textile
- Desalination
- Steel Production
- Sugar/Ethanol
- HVAC
- Breweries/Wineries

PRODUCT QUALITY & PRECISION

Assuring product quality, precision manufacturing and internal process integrity, Bray Controls has been certified to ISO 9001 quality standards. The certification of compliance was issued by Lloyd's Register Quality Assurance (LQRA), a worldwide independent certifier. The basis for Bray Controls' high level of quality assurance are the quality control guidelines and procedures submitted, reviewed and approved in accordance with criteria established within ISO 9001:2000 and EU Directives.

"Bray Controls is focused on and committed to meeting the expectations and needs of our customers while continually improving the effectiveness of our quality management."

- All Bray valves are pressure tested to 110% of rated pressure to assure bubble-tight shutoff.
- All Actuators are calibrated and cycle tested before shipment. Pneumatic actuators are also pressure tested to assure no leakage.
- Material Traceability - Certification is provided for all valves upon request for all pressure retaining components.
- Positive Material Identification - All materials are subjected to PMI testing to verify material traceability certificate.

BRAY SERIES 92/93
PNEUMATIC ACTUATOR

Output Torques to 44,130 Lb-in (4,986 N-m)

Styling, strength, compactness, and simplicity of design have been combined to produce the Bray Series 92 direct acting and the Series 93 spring return pneumatic actuators.

Engineering excellence and precision manufacturing has produced a modular product line with reduced overall size requirements and economic savings. In addition all Bray accessories are fully modular and directly mount to the actuator – providing flexibility and efficiency at reduced cost.

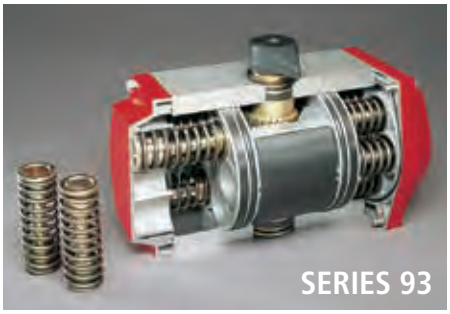

Bray Series 92/93 actuators are rack and pinion, opposed-piston actuators available in two versions: double acting for rotation of 90°, and spring return for 90° rotation.

All double acting and spring return units are suitable for both on-off and throttling applications. Actuators which can be actuated with other media such as hydraulic oil or water are also available as an option.

STANDARD MATERIALS SELECTION

NAME	MATERIAL
Body	Extruded Aluminum Alloy, Anodized 316 Stainless Steel
End Caps	Die cast Aluminum Alloy with Corrosion Resistant Polyester Coating 316 Stainless Steel
Pistons	Die Cast Aluminum Alloy
Output Shaft/Pinion	Carbon Steel, Zinc Plated
Travel Stop	Alloy Steel
Shaft Bearings	Acetal
Piston Guides	Acetal
Fasteners	Stainless Steel
Springs	Spring Steel, Protective Coating
Piston O-Ring Seals	BUNA-N
Options:	Polyester Coated Body Exterior Electroless Nickel Plated Body Exterior Hard Anodized Body Exterior Seacorr Coated Body Exterior Stainless Steel Pinion
Temperature Range	Standard -4°F to 200°F (-20°C to 93°C)
	Low -40°F to 176°F (-40°C to 80°C)
	High 0°F to 300°F (-18°C to 149°C)

Note: Cycle life on low and high temperature seal kits reduced compared to standard Buna N seals

Series 92 Double Acting	Available in 90°
Series 93 Spring Return	Available in 90° Rotation Operating Pressure 140 psig (10 bar) maximum

DIRECT MOUNTING

Bray actuators comply with ISO 5211 dimensions and mount directly to Bray valves without using external linkages. Field installation is simple, misalignment is minimized and contamination buildup between valve and actuator is reduced.

PNEUMATIC ACTUATOR OPTIONS

SERIES 5 - DECLUTCHABLE GEAR OPERATOR

STAINLESS STEEL

EXTENDED TRAVEL STOPS

All Bray Series 92/93 actuators have permanently lubricated bearings and guides.

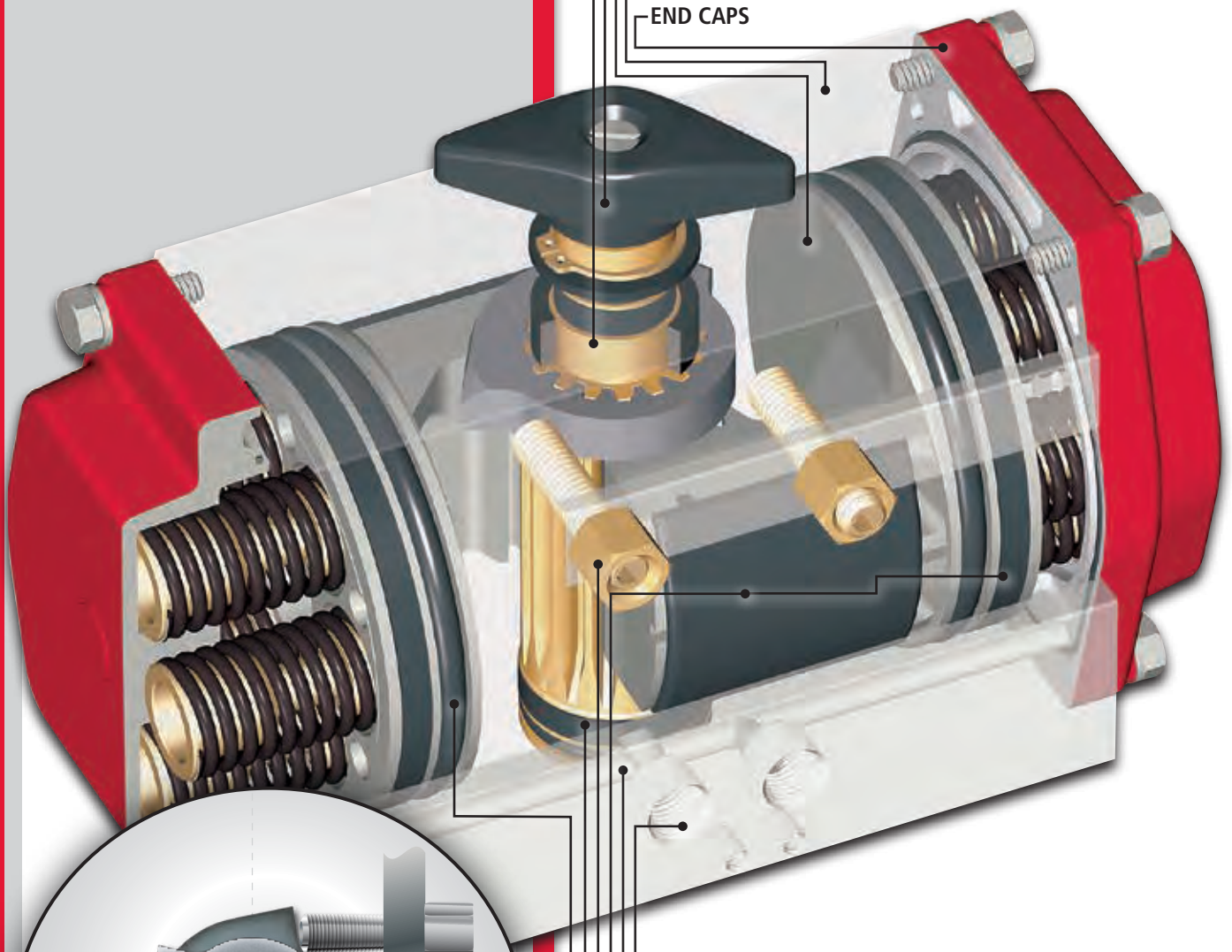

TRAVEL STOP ADJUSTMENT

The 0° and 90° travel positions have travel adjustments of +5° max. to –5° min. Extended travel stops are also offered as an option.

PNEUMATIC SUPPLY PORTS: Available imperial or metric. NAMUR interface for accessory mounting is standard on all actuator sizes.

INTEGRAL PORTING: Reduces the cost of external tubing that is also easily damaged.

PISTON GUIDES and RINGS: Provide low coefficient of friction and absorb the side thrusts of the pistons.

TRAVEL STOPS: Adjusting screws limit the travel of the actuator to specific degrees of rotation in both open and closed directions.

OUTPUT SHAFT BEARINGS: Top and bottom of the pinion.

PISTON O-RING SEALS

BRAY SERIES 63

SOLENOIDS PILOT OPERATED SPOOL CONTROL

These units can be used with either spring return or double acting actuators where on/off electrical operation is required. Units have ½" NPT conduit connections and IP65 DIN units have cable gland PG9 connectors, also available with ½" NPT conduit adapters. The coils are UL recognized and CSA certified. All Series 63 solenoids carry the CE mark.

FEATURES:

- **Compact**
- **Modular**
- **Pilot Operated**
- **Spool Control Valve**
- **Convertible From 3-Way (3/2) to 4-Way (5/2)**
- **Spring Return or Double Acting**

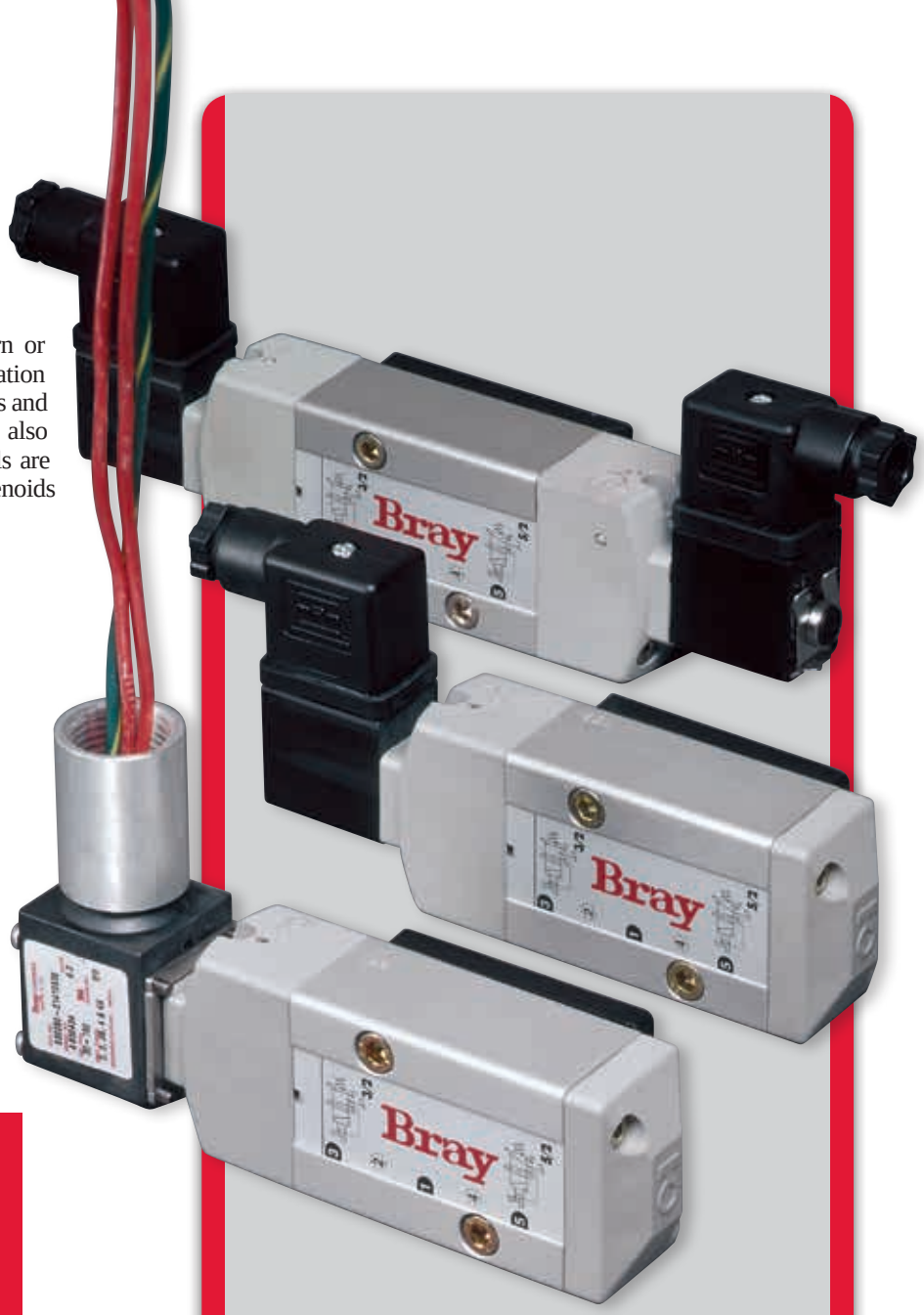

SOLENOID OPTIONS

- Stainless steel housings
- Low-powered units
- Intrinsically safe units
- BUS solenoids are available for DeviceNet and Profibus-PA protocols
- AS-I Interface solenoids with IP65 DIN/PG9 cable gland connectors are available
- All direct mount to Bray pneumatic actuators.
- Speed controls that allow independent control of speed in both directions

FM APPROVED

MANUAL OVERRIDE: Each unit contains as standard a mechanical manual override located on the solenoid valve block. In the event of electrical power failure, over-riding is accomplished by rotating the manual override screw which will divert the air from one chamber of the pneumatic actuator to the other.

VALVE DESIGN: Pilot Operated Spool

MEDIA: Dry or lubricated air or inert gases

COIL HOUSINGS: Three standard coil housings are offered.

1. **Watertight** (NEMA 4, 4x) housing offers a molded and potted coil with UL recognized components and CSA certification.
2. **Watertight & Explosion Proof** (NEMA 4, 4x, 7, 9) housing is UL listed and C.S.A. certified for hazardous locations Class I, Div.1 (Groups A-D) and Class II, Div.1 (Groups E-G).
3. **IP65 DIN**

Standard solenoid valves are supplied as single coil units. Dual coil units are also available for customers who require actuators to remain in last position during electrical power failure.

SPRING RETURN ACTUATORS: The Series 63 Solenoid Valve fills the spring chamber with supply air rather than drawing air from the surrounding atmosphere. This keeps the spring chamber clean and dry, and improves the performance and service life of the actuator.

DIRECT MOUNTING

DIRECT MOUNTING: Meeting NAMUR (VDI/VDE 3845) standards, all Bray Series 63 solenoid valves direct mount to the integral porting system of Bray Series 92/93 pneumatic actuators. No external piping is required. Bray's direct mounting permits quick and simple field installation.

SERIES 63 - MECHANICAL CHARACTERISTICS

MOUNTING	NAMUR (VDI/VDE 3845), mountable in any position, hardware included.
MATERIALS	
Body:	Anodized Aluminum
Spring:	Phosphate treated black steel
Shading Coil:	Copper
Seals:	NBR + PUR
Core / Tube:	Stainless / Brass
End Covers & Plate:	6/6 glass filled polyamide (PA/FV)
Spool:	Aluminum
Internal Parts:	Zamak, Steel, Acetal
PNEUMATIC PORTS	1/4" NPT
ELECTRICAL CONNECTIONS	NEMA Housings: 1/2" NPT DIN Housing: Cable Gland PG9

CONSTRUCTION

Standard construction is molded and potted coil with 18" leads, Class F insulation. Other insulation classes available. The IP65 DIN coil and magnet structure are epoxy encased. Molded cordsets and connectors are available for IP65 DIN coil housings, please consult Bray representative or factory for further information.

NORMAL AMBIENT TEMPERATURE RANGE	
NEMA Housings:	AC: -13°F (-25°C) to +140°F (+60°C) DC: -13°F (-25°C) to +77°F (+25°C)

ELECTRICAL COIL	
NEMA Housings *with flying leads*	12, 24, 120, 220 VAC, 50-60 HZ 12, 24, 120 VDC
IP65 DIN Housings *Type "I" Connection*	24, 120, 240 VAC, 50-60 HZ 24 VDC

NEMA & IP65 DIN Coil Insulation-Class F
Max Temperature Rating: 311°F (155°C)

Max Ambient Temperature Rating: 158°F (70°C)

FLOW	
1/4" (6.35 mm) PIPE C_V = .7	Flow = 30 scfm, 150 psi (10.4 bar) max.

Bray S92/93 actuation times are very dependent on the flow capacity of their air supply. It is strongly recommended that only the Bray S63 high flow solenoid be used with the Bray S92/93 actuators. The use of smaller port solenoids, solenoid manifolds, small I.D. air supply tubing and/or extended lengths of tubing can significantly reduce the actuation time and/or the initial response to the command signal. Please see TB-1140 for pneumatic FLOW TESTING RECOMMENDATIONS.

NOMINAL POWER (WATTS)	
NEMA Housing	AC - 6.3, DC - 6.9
DIN Housing	AC - 2.5, DC - 3.0
OPERATING SPEED	10 cycles per minute - with more if needed
DUTY CYCLE	Continuous

BRAY SERIES 50
VALVE STATUS MONITORS

The Series 50 signals actuator and valve position to local and remote stations. The units have been designed for ease of wiring and a wide variety of switches. Both feature the same high quality internal parts and the same rugged reliability.

HIGH VISIBILITY DISPLAY AVAILABLE

Prominently labeled and color coded – yellow for open, red for closed – the display indicates valve position through the full range of travel. Made of high impact, heat and chemical resistant clear polycarbonate, this display withstands caustic washdown and offers excellent corrosion protection.

SERIES 50–0400
Waterproof
NEMA-4, 4X, IP 65

SHAFT BEARINGS: The Series 50-0400 has acetal bearings on the top and bottom of the shaft which reduce friction and eliminate shaft binding.

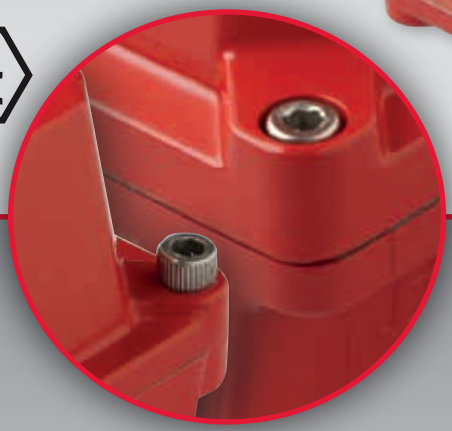

CAPTIVE HOUSING BOLTS

The housing covers of Bray Valve Status Monitors are attached to the housing bases by stainless steel bolts. When the cover is removed the bolts are held captive in the cover. This prevents time consuming problems caused from lost or misplaced bolts.

CAMS / CAM ADJUSTMENT: A cam for each switch is mounted directly to the output shaft and each cam is color coded – red adjustment screw matches red cam (valve closed indication), green screw matches green cam (valve open indication). The cams are infinitely and independently adjustable from the top by finger touch or regular screw driver with no special tools needed. The adjustment screws rotate the eccentric shaped cams. Set screw will prevent cams from slipping out of adjustment from line vibration.

O-RING SEALS: Seals on the shaft and housing provide a waterproof enclosure and prevent internal corrosion.

POSITION INDICATORS: Bray has specially designed position indicators which locally signal valve position. The pointer, made of ABS, comes standard with all Series 50 units.

HOUSING: Die Cast Aluminum with standard coating. Seacorr Coated Body Exterior also available.

A Bray Series 63 solenoid valve can be easily terminated in Series 50-0700 valve status monitor.

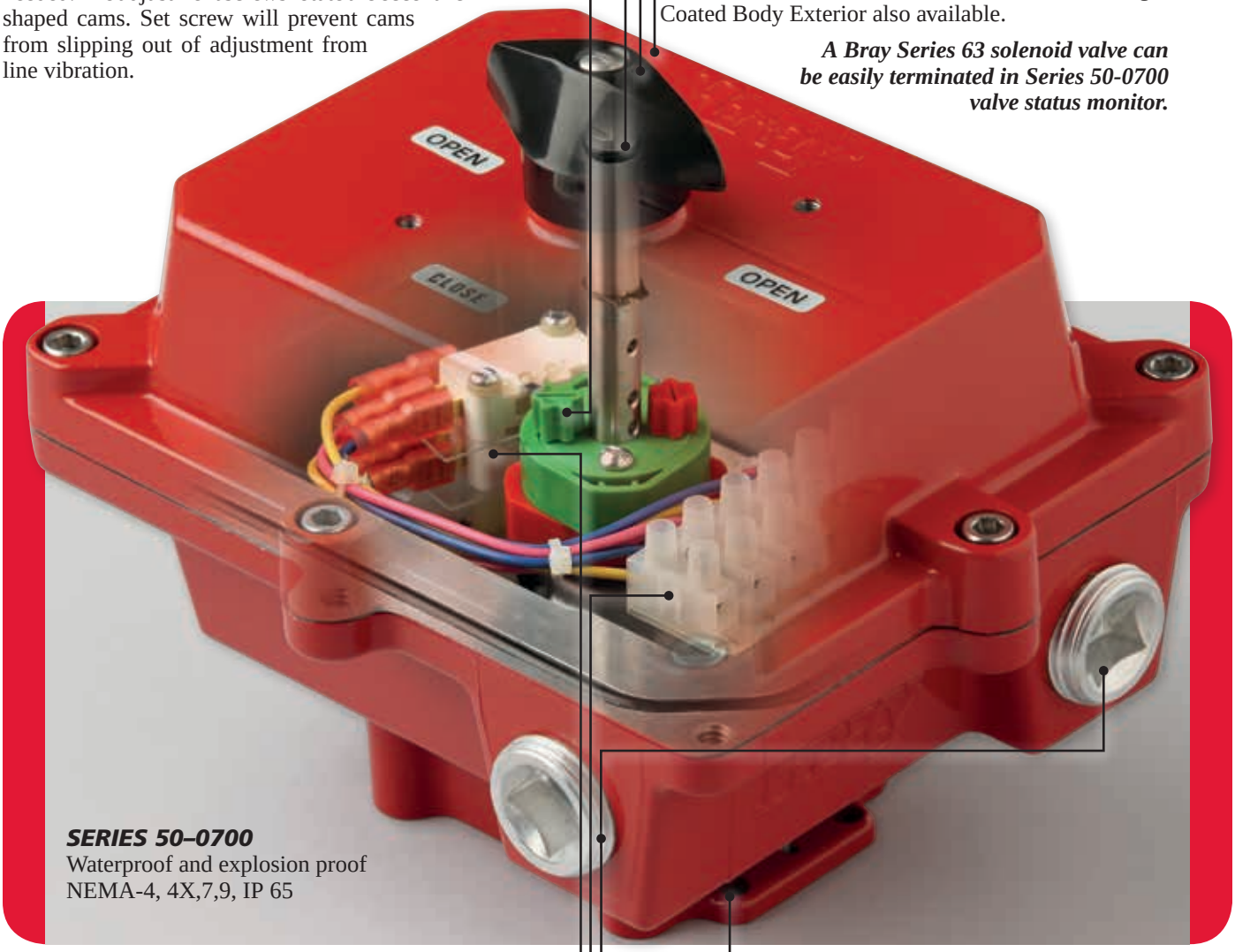

SERIES 50–0700
Waterproof and explosion proof
NEMA-4, 4X,7,9, IP 65

SWITCHES: Series 50 Valve Status Monitors come standard with 2 SPDT V3 switches. Additional switches and other switch options are available in the 50-0700 units. Please consult your factory representative.

TERMINAL BLOCK: The internal switches are pre-wired to a terminal block. The block has been designed for ease of wiring installation with clearly marked numbers for both open and closed switches.

CONDUIT ENTRIES: two conduit entries. The Series 50-0400 unit has ½" NPT (M20) conduit connections, and the Series 50-0700 has ¾" NPT (M25) conduit connections.

DIRECT MOUNTING A compact, modular design allows direct mounting of the Bray Series 50 to pneumatic actuators without any brackets or couplings. The mounting pattern complies with VDI/VDE 3845 (NAMUR recommendations).

SERIES 50-0700 AVAILABLE SWITCHES:

- Micro switches
- Proximity switches
- Pneumatic switches
- Reed switches
- Potentiometer

Other switches are available. Please consult your factory representative.

BRAY SERIES 52
VALVE STATUS MONITOR

Bray's 2N1 ProxSensor has combined two proximity sensors in one self-contained, fully sealed, compact enclosure. DeviceNet, PROFIBUS DP and AS-i BUS network units with solenoid drive are also available.

The Series 52 offers the bounce-free electronic valve signaling required for all PLC, computer and solid state circuitry vital to process control and information networks. Costly external junction boxes are eliminated and field wiring costs are greatly reduced. Bray's approach delivers the most compact, reliable and economical valve position monitoring system available.

MOISTURE, CHEMICAL AND CORROSION PROTECTION: The two proximity sensors are completely encapsulated with epoxy resin in a rigid polymer enclosure that is impervious to moisture and most chemical and corrosive agents. Once the multi-pin connection is made, the cable link to plant wiring is completely sealed eliminating the possibility of failure due to moisture. These protections make the Series 52 the best choice for hostile environments.

ELECTRICAL CONNECTION: A multi-pin electrical connector is designed for full compatibility with today's industrial wiring requirements.

POLYMER ENCLOSURE: Bray's design of two sensors in one rugged enclosure greatly reduces space requirements and expensive housings needed for previous dual switch applications. The epoxy resin encapsulation protects the sensors against vibration or shock.

LOCAL POSITION INDICATION: A Valve Position Pointer, made of highly visible yellow ABS material, shows valve position locally throughout the full range of travel.

- **LED Indicators** give positive verification that the sensors are electrically functioning and show the target position has been reached.
- **High Visibility Valve Position Display** (optional) Prominently labeled and color coded – yellow for open, black for closed – the display indicates valve position throughout the full range of travel.

2N1 ProxSensor™

VALVE POSITION TARGETS

Unique, symmetrically designed targets are mounted inside the valve position carrier. The targets are factory pre-aligned for Bray products. No cams or set screws are required and time consuming field adjustment is eliminated. Standard targets are stainless steel and non-magnetic. The sensors will not attract and be falsely tripped by loose metal objects. Magnetic targets are used for BUS network sensors. Standard non-adjustable targets are preset at 90º travel.

Adjustable Target (optional) allows the customer to individually set the valve position signal of both open and closed directions at incremental positions.

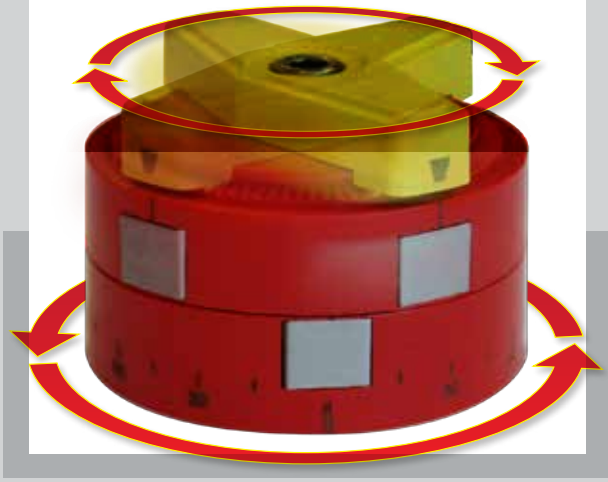

SERIES 52 MODELS

Inductive Proximity Sensors: These sensors are solid state electronic controls which provide high resolution, are spark free and contain no moving electrical parts to wear out.

DC Inductive Proximity Sensors: The standard DC sensors, offered as either PNP or NPN, have an economical internal amplifier and operate on 10 VDC (200mA) to 30 VDC (600mA). A NAMUR Intrinsically Safe DC sensor can be supplied for use with an IS barrier amplifier. The DC connector is M12, 4-pin.

AC Inductive Proximity Sensors: AC sensors operate on 20 VAC (200mA) to 250 VAC (500mA). No external switching amplifier is needed for AC applications. The AC connector is ⅞", 5-pin.

BUS Network Powered Proximity Sensors with Solenoid Drive:

Bray's BUS valve status monitors offer all the standard Series 52 features plus network communication and remote access to valve position and diagnostics. AS-i, DeviceNet and PROFIBUS DP units are available.

All network units contain two BUS powered proximity sensors, applicable network pin connection and a solenoid drive connection. They can be supplied with a Bray solenoid which may be powered by the network.

QUICK-CONNECT ACCESSORIES:

- Cordsets
- Extension Cords & Receptacles
- Cordsets (AC Sensors only)

INTEGRAL Y-CONNECTION

Bray offers a "Y" cable to combine a Series 52 and DIN solenoid into a single connection. The Y-Connection can be wired to a remote electrical junction box by either cordset, extension cord or conduit adapter. Bray can supply a Series 52, solenoid and actuator as a completely assembled system.

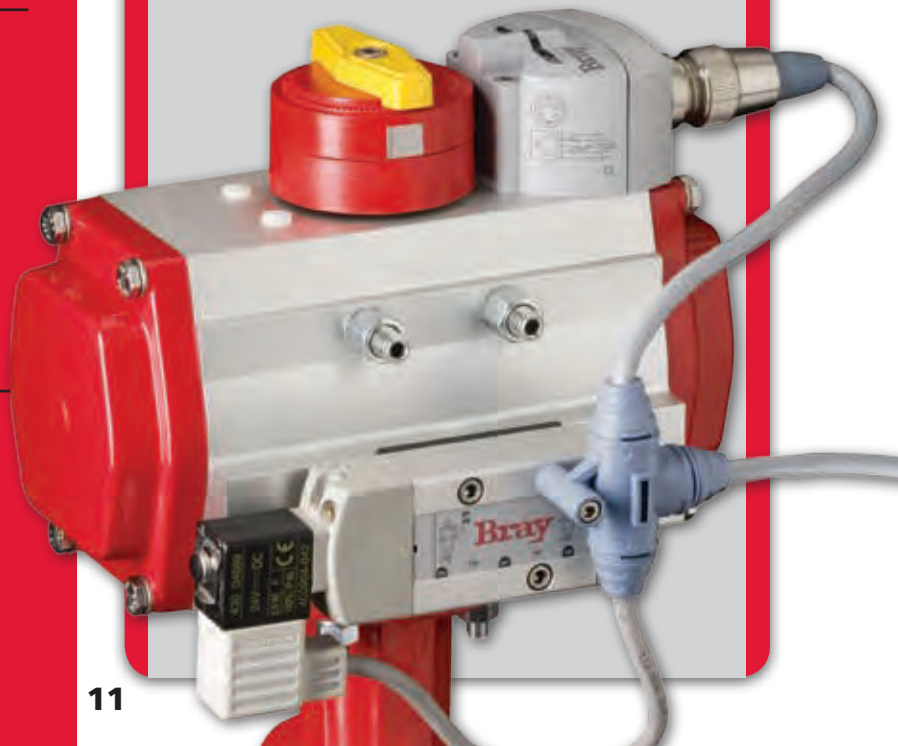

SERIES 52 ADVANTAGES

2N1 ProxSensor offers reduced installation cost as wells as the following advantages:

vs. Mechanical Snap Acting Switches

- No switch sparking (arcing or wear)
- No contact bounce
- No moving switch elements
- Fully sealed enclosure

vs. Magnetic Reed Switches

- No switch sparking (wear)
- No contact bounce
- No moving switch elements
- Not fragile to vibration or shock

vs. Externally Mounted Proximity Switches

- 2 sensors in 1 enclosure
- No brackets required
- More compact design

vs. Two Inductive Proximity Switches in standard switchbox

- Lower cost
- More compact design
- Fully encapsulated enclosure

BRAY SERIES 6A

ELECTRO-PNEUMATIC POSITIONERS

Precision digital control with proven reliability Bray's Series 6A positioners were designed with ease of installation, simple calibration, efficiency and economy in mind. Units for rotary single acting and double acting actuators are offered as standard. Intrinsically safe versions are also available.

Bray's BUS positioners offer all Series 6A features plus increased network communication and remote access to positioner parameters and diagnostics.

ON-LINE ADAPTIVE CONTROL: During operation, the unit continually optimizes control behaviors and travel times in response to changes in line media pressure.

DIAGNOSTICS: Bray's Series 6A positioners feature corrective and preventative maintenance self-diagnostic checks. All diagnostics run constantly, may be continually monitored, and recorded.

AIR SUPPLY MONITOR: An additional feature of the Series 6A is an internal monitor that transmits a fault signal alarm if the air supply fails. The alarm is shown locally on the LCD and may be sent to the remote control panel.

LOCAL POSITION ADJUSTMENT: Valve position can be manually adjusted locally by removing the housing cover, then using the push buttons to override the remote command signal.

FLOW RESTRICTORS: Precise control of even the smallest pneumatic actuators through internal flow restrictors.

POSITION INDICATOR: In addition to the LCD display, valve position is clearly shown over a distance by a yellow indicator.

LOCKING DEVICE: For high vibration applications, the Series 6A features, as standard, a friction clutch locking device.

EXPLOSION PROOF UNITS

Designed for hazardous and severe applications, Series 6A explosion proof positioners offer all the features of the waterproof units in a flame-proof enclosure.

The automatic calibration keypad push buttons in the explosion proof units are externally mounted and easily accessible behind a flap. The units can be controlled locally, even during operation, without removing the housing cover. The LCD display is viewed from behind a sodium glass explosion proof window.

Waterproof/Explosion Proof enclosures meet NEMA 4, 4x, 7 & 9 specifications. These enclosures are constructed of die cast aluminum with an epoxy coating for chemical and corrosion protection. A waterproof stainless steel enclosure is available upon request.

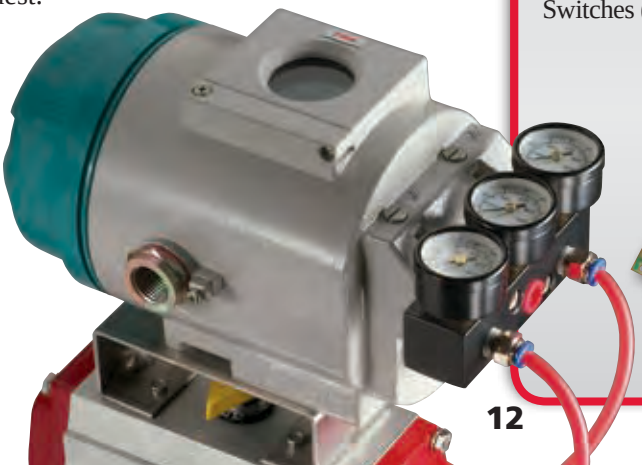

Shown with optional gauges

MODULAR ACCESSORIES

GAUGE MANIFOLD: An externally mounted gauge manifold is offered with up to three gauges to measure air supply and the actuator input and output pressures.

VOLUME BOOSTERS: These modules increase air volume output and decrease response time.

OPTIONAL BOARDS

These optional boards provide additional information and features and can be easily installed in the field.

RETRANSMISSION MODULE (IY): This 4-20 mA DC output board indicates valve position to the control room.

PROGRAMMABLE ELECTRONIC SWITCHES (ALARM): Two semiconductor switch outputs and one alarm output may be programmed to activate at various travel positions. One digital input is also included.

LIMIT SWITCHES: For cam activated indication of actuator travel limits, two output formats are offered: Mechanical Switches or intrinsically safe Inductive Proximity Switches (SIA).

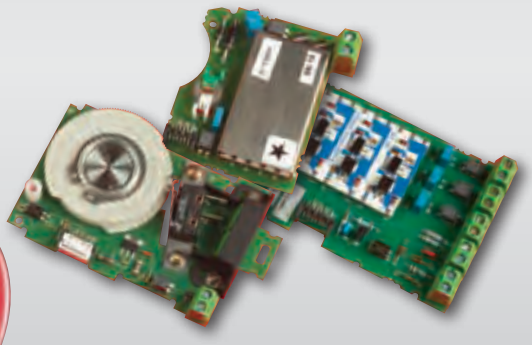

LCD DISPLAY & KEYPAD: Provides visual confirmation of valve position in precise one degree increments, operating status and keypad entries with the housing cover in place. The positioner operating mode (automatic or manual) and alarm messages are also shown.

With the housing cover removed, the keypad push buttons are accessible to perform a variety of functions:

- Confirmation of the set point
- Progress to the set point
- Potentiometer alignment
- Diagnostic checks
- Error messages

ENCLOSURES: The standard waterproof enclosure is constructed of a durable, lightweight polymer, providing excellent chemical and corrosion resistance.

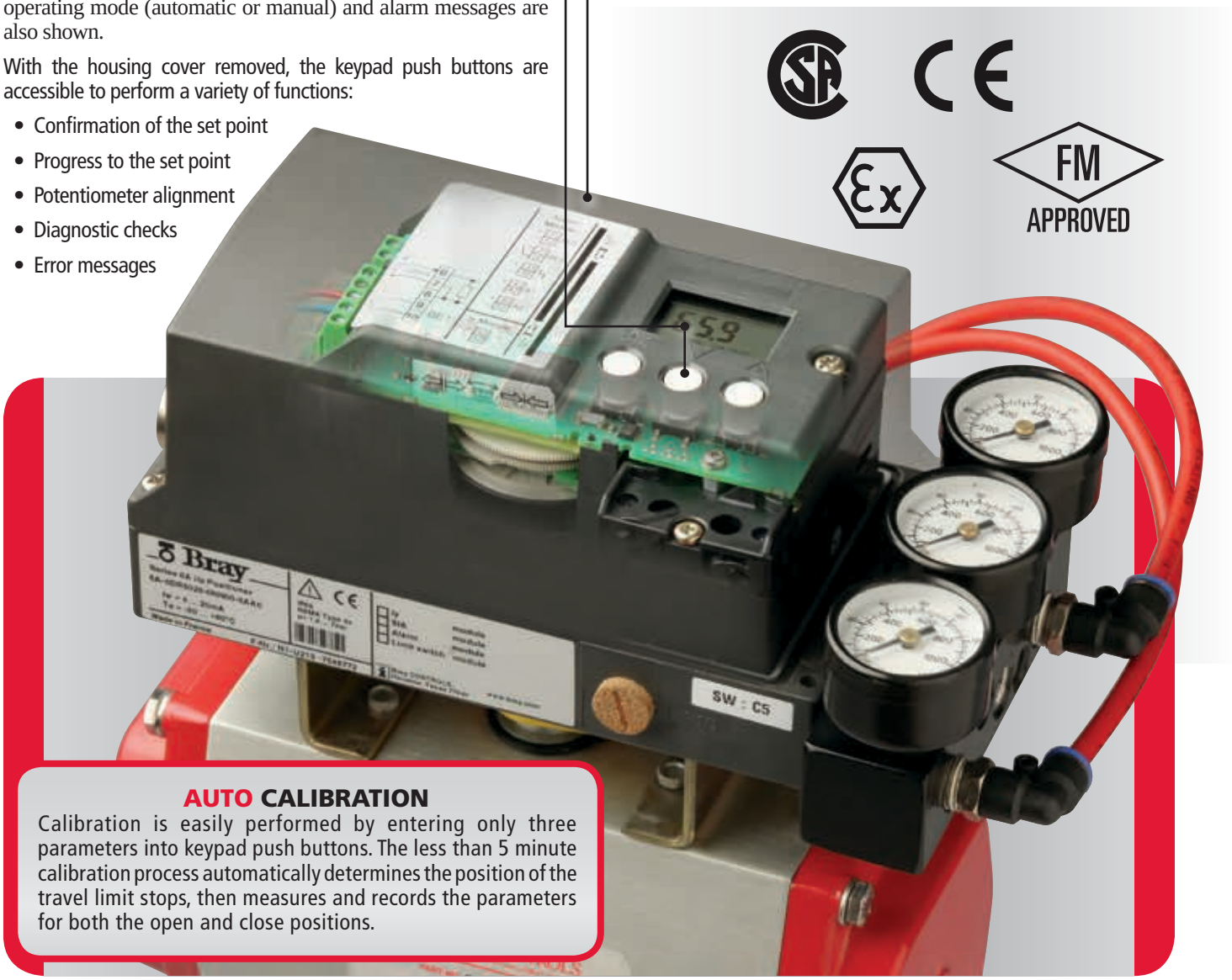

AUTO CALIBRATION

Calibration is easily performed by entering only three parameters into keypad push buttons. The less than 5 minute calibration process automatically determines the position of the travel limit stops, then measures and records the parameters for both the open and close positions.

SERIES 6A WATERPROOF UNITS - SPECIFICATIONS

Supply Pressure [Max]	20 - 102psi (1.4-7Bar)
Air Consumption (80psi)	<0.00035 scfm (.00275 sccm)
Input Signal	
Analog	4-20 mADC
BUS	HART, Foundation Fieldbus, Profibus PA
Connections	
Supply	¼" NPT (G ¼")
	Signal (2 conduit entries) ½" NPT (M20x1.5)
Resolution	<0.05%
Repeatability	0.32%
Hysteresis	<0.2%
Temperature Range	-22°F to +176°F (-30°C to +80°C)

Weight	2.0 lbs. (0.9 kg)
Control Element Type	Piezoelectric
EMC Requirements	EN 61326/A1 Appendix A.1
	NAMUR NE21 August 98
Protection Class	NEMA 4, 4x and IP66
Materials	
Housing	Fiberglass Reinforced Polymer with Metalized Coated interior for EMC protection
Housing Fasteners	Stainless Steel
Position Indicator	ABS polymer
Positioner Mounting	VDI/VDE 3845 (NAMUR)
Available Approvals	FM, CSA, CE, ATEX

SERIES 6P P/P POSITIONER

FOR DOUBLE ACTING & SPRING RETURN ACTUATORS

The Bray Series 6P positioner provides outstanding control for a wide range of quarter-turn valves. This design provides fast, sensitive response characteristics to meet the most demanding control objectives using a 3-15 psi pneumatic control signal. A high visibility dome position indicator and 3 gauges are provided as standard.

APPLICATIONS

Bray Series 6P positioners are used to control quarter-turn control valves such as butterfly and ball valves (standard and segmented) and its sensitive two-stage relay makes it ideal for precise damper control applications. Specify Bray Series 6P whenever valve positioning and sensitivity is critical.

For modulating control of valve positions, the Series 6P automatically positions the valve to precise angles between 0° and 90° in response to a pneumatic input signal. The standard positioner is Double Acting but can be easily converted to Single Acting/Spring Return. The 6P also has Split Range capabilities and an easy to adjust Span and Zero.

MOUNTING & MATERIALS

The Series 6P can be installed directly on any quarter-turn valve actuator conforming to the NAMUR standard.

Contact your local Bray Distributor for information about mounting the 6P on non-NAMUR actuators.

The Series 6P enclosure is IP66 rated and is constructed from durable die-cast aluminum that is first anodized for internal corrosion resistance, then powder coated for external resistance to harsh environments.

STANDARD FEATURES

1. **Two-Stage Pilot Relay:** Provides fast, sensitive response characteristics for precise control of critical control valves and dampers.
2. **Corrosion Resistant Materials:** All exposed parts are either stainless steel or powder coated anodized aluminum to permit use in corrosive environments.
3. **High Visibility Dome Position Indicator:** Provides high-contrast, full-angle viewing of valve position.
4. **Vibration Resistant:** High natural frequency and pneumatic dampening make the Series 6P resistant to vibration.
5. **Gauge Manifold:** 3 gauges are provided for Signal, OUT 1, and OUT 2 ports.
6. **Double or Single Acting**
7. **Adjustable NAMUR Mounting Bracket**

OPTIONS / ACCESSORIES

Special Cams: Special cams for non-standard ranges may be modified by the factory or customer.

Air Filter: A coalescing air filter is recommended for all positioners to eliminate dust, moisture, and oil particles from contaminating the unit.

Mechanical Switches: Limit switches may be added to the Series 6P to provide position feedback. Switches are available as 2 x SPDT or 2 x DPDT for AC or DC applications.

Proximity Sensor: For non-contacting limit switch applications, 2 x DC-NPN are available to provide open and close valve indication.

Position Transmitter: A 4-20mA position transmitter provides continuous valve position indication from 0 – 90 degrees of travel.

SERIES 55
FILTER REGULATORS

The Bray Series 55 Filter Regulator is a 5 micron filter designed to provide nominal filtration removal of solids and liquids from the compressed air with accurate control to any pneumatic control device and are strongly recommended for use with the Bray Series 64 and 6A positioners.

LOCKING KNOB: Allows for downstream pressure adjustment and locks the pressure setting in place.

THREADED COLLAR: Permits easy attachment of bracket for panel mounting.

PRESSURE PORTS: 1/4" NPT or 1/4 G Metric

BOWL QUICK RELEASE: Allows for easy removal of the bowl and guard for access to the filter element without the need for special tools.

TRANSPARENT POLYCARBONATE BOWL: Provides easy view of liquid levels.

METAL BOWL GUARD: Provides sturdy breakage protection from external environmental factors.

PUSHBUTTON DRAIN: Allows for easy removal of liquid from the bowl.

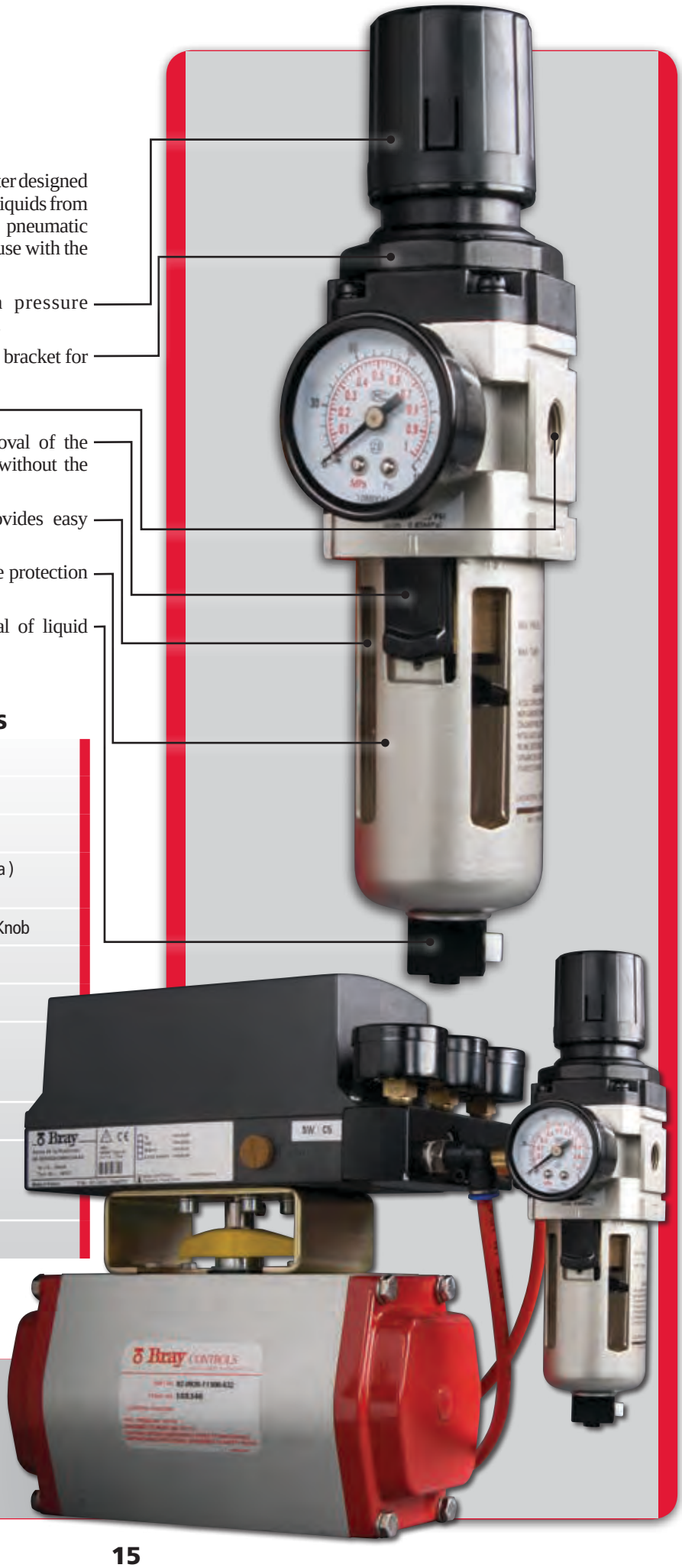

SERIES 55 FILTER REGULATORS

Pressure Ports	1/4" NPT or G 1/4
Gauge Ports	G 1/8
Flow (SCFM)*	30
Set Pressure	7 – 125 PSIG (0.05 - 0.85 MPa) (0.5 - 8.6 Bar)
Filter Regulator Body	Zinc / Non-Removable Rising Knob
Bonnet	Plastic
Springs	Steel
Bowls (2 Ounce)	Transparent Polycarbonate with Metal Guard Metal (Zinc) w/Sight Gauge
Filter Element	5 Micron Standard – Plastic
Pressure Ratings**	0 – 250 PSIG (0 - 1.70 MPa) (0 – 17.2 bar)
Temperature Ratings	32°F - 175°F (0°C - 80°C)

*SCFM = Standard cubic feet per minute at 100 psig inlet, 90 psig no flow secondary setting and 10 psig pressure drop.
**Do not attach to pressurized gas bottles.

Global Manufacturing, Service Around the Corner

To serve you locally, each region maintains a factory certified sales and service network for all Bray International products.

BRAY INTERNATIONAL, INC.

Houston, TX +281.894.5454

BRAY CONTROLS

USA
Houston, TX +281.894.5454

ARGENTINA
Buenos Aires + 54.11.4362.0666

BENELUX
Heerhugowaard +31.72.572.1410

BRAZIL
Paulinia SP-Brazil +55.19.3517.6161

CANADA
Montréal +514.344.2729

CHILE
Santiago +56.2739.2966

CHINA
Hangzhou, Zhejiang +86.571.828.52200

GERMANY
Krefeld +49.2151.53360

INDIA
Gujarat +91.265.2633868

MEXICO
Zapopan, Jalisco +52.33.3836.4460

PACIFIC
Melbourne, Australia +61.3.8541.2555

PERU
Lima +511.251.0251

POLAND
Oświęcim +48.33.842.1968

UNITED KINGDOM
Inchinnan +44.141.812.5199

VIETNAM
Ho Chi Minh City +84.8.3742.3428

FLOW-TEK

USA
Houston, TX +832.912.2300

BRAZIL
Paulina SP-Brazil +55.19.3517.5555

CHINA
Hangzhou, Zhejiang +86.571.828.52200

RITEPRO

CANADA,
Montréal +514.324.8900

CHINA,
Hangzhou, Zhejiang +86.571.828.52200

Bray® CONTROLS
Division of BRAY INTERNATIONAL, Inc.
13333 Westland East Blvd., Houston, Texas 77041
281.894.5454 Fax 281.894.9499 www.bray.com

All statements, technical information, and recommendations in this bulletin are for general use only. Consult Bray representatives or factory for the specific requirements and material selection for your intended application. The right to change or modify product design or product without prior notice is reserved. Patents issued and applied for worldwide.

Bray® is a registered trademark of BRAY INTERNATIONAL, Inc.
© 2015 Bray International. All rights reserved.

B-1051_EL_Pneumatic_10-2015

Enjoy Faster, Easier Checkout Register Now

SPEEDAIRE

Screwdriver Adjustment Exhaust Port Flow Control, 1/4" NPT Valve Port Size, 0 to 300 psi

Item # **1EJU3** Mfr. Model # **1EJU3** Catalog Page # **2619** UNSPSC # **27131609**

How can we improve our **Product Images**?

Compare

Web Price
$6.00 / each

Auto-Reorder Every 1 Month

Deliver one time only

1 ADD TO CART

+ Add to List

Shipping Pickup

Expected to arrive **Wed. Nov 22**.

Ship To **80001** (Change)

3.0 of 5 | 1 review | Write a Review

Shipping Weight **0.07 lbs.**

Country of Origin **Taiwan** | *Country of Origin is subject to change.*

Note: Product availability is real-time updated and adjusted continuously. The product will be reserved for you when you complete your order. More

PRODUCT DETAILS

This speed control muffler by Speedaire® allows you to adjust the speed of an operating air cylinder or air tool by metering airflow on the exhaust ports of the air valve. Muffler comes with a lock nut to help you maintain the operating speed setting. Model has a surrounding sleeve of sintered bronze to help reduce exhaust air noise.

View Less

TECHNICAL SPECS

Item	**Exhaust Port Flow Control**	Pressure Range	**0 to 300 psi**
Valve Port Size	**1/4" NPT**	Standards	**Meets OSHA Requirements**
Adjustment	**Screwdriver**	Pneumatic Valves Product Group	**Exhaust Port Flow Control**

ASHCROFT®
Trust the shield.®

1009 Stainless Steel Case Gauge

FEATURES

- Meets ASME B40.100 specifications
- Corrosion resistant SS case
- Dry gauges are field fillable
- Power***Flex***™ movement provides superior resistance to shock, vibration and pulsation
- True Zero™ reduces reading errors by using "zero box" instead of conventional dial pins
- ***PLUS!***™ performance available for liquid filled performance with a dry gauge
- MSL helium leak tested to 1X10^{-6} scc/s
- Ventable fill plug
- Accessory kits for easy panel mounting

TYPICAL USES

- Pumps and compressors
- Boilers
- Equipment skids
- Specialized OEM equipment
- Hydraulics and pneumatics
- Severe ambient conditions

SPECIFICATIONS

Accuracy:	ASME B40.100, Grade 1A, ±1% of span (Dry) ±1.5% of span (Liquid filled)
Dial Sizes:	2½″ (63mm), 3½″ (100mm)
Ranges:	Minimum 0-15 psi, maximum 0-15,000 psi, vacuum and compound
Wetted Materials	
Tube:	316L SS tube
Process Connection:	316L SS socket (SW) Aluminum bronze socket (AW)
Non Wetted Materials	
Window:	Polycarbonate (Std.), Safety glass (XSG), Polysulfone (XPS) 3½″ Dial only
Dial:	Black figures on white background, aluminum
Pointer:	Black, aluminum, adjustable (Std.), micrometer (XMP)
Movement:	Power***Flex*** movement Bottom plate – 304 SS Upper plate – 304 SS Pin – 304 SS Hairspring assembly – 304 SS Pinion – 304 SS Segment – Glass filled polyester
Case:	304 SS (Std.), 316L SS (XYW)
Ring:	304 SS (Std.), 316L SS (XYW)
Process Connection Location:	Lower, Back, Top, 3 o'clock, 9 o'clock
Process Connection Sizes:	⅛ NPT, ¼ NPT (see ordering code for more options)

KEY BENEFITS

- **IP65 Rating**
- **NEMA 4X**
- **CRN Approved**
- **PED**
- ***PLUS!***™ **Performance (XLL)**

Dampening:	Glycerin case fill (Std. liquid fill), Silicone case fill (XGV), Halocarbon case fill (XGX), ***PLUS!*** Performance (XLL)
Weather Protection:	IP65 (Plug closed), IP54 (Plug vented) NEMA 4X (Plug closed)
Approvals:	CRN, RoHS, PED

MIN/MAX TEMPERATURE LIMITS

Version	Ambient	Process	Storage
Dry	-40/200°F (-40/93°C)	-40/250°F (-40/121°C)	-40/250°F (-40/121°C)
PLUS!	-40/150°F (-40/66°C)	-40/200°F (-40/93°C)	-40/150°F (-40/66°C)
Glycerin Fill	20/150°F (-7/66°C)	20/200°F (-7/93°C)	0/150°F (-18/66°C)
Silicone Fill	-40/150°F (-40/66°C)	-40/200°F (-40/93°C)	-40/150°F (-40/66°C)
Halocarbon Fill	-40/150°F (-40/66°C)	-40/200°F (-40/93°C)	-40/150°F (-40/66°C)

All specifications are subject to change without notice.
All sales subject to standard terms and conditions.
©2017 Ashcroft Inc. Ash Bul GS-3 1009 Rev C, 08/17

ashcroft.com
info@ashcroft.com
1.800.328.8258

ASHCROFT®
Trust the shield.®

1009 Stainless Steel Case Gauge

ORDERING CODE

	Example:	251009	SW	L	02	L	XC4	15#
Dial Size/Series Code								
251009 – SS case		251009						
351009 – SS case								
System								
AW - 316L SS tube/Aluminum, bronze connection (Max. pressure 1000 psi)								
SW - 316L SS tube/316L SS process connection (Max. pressure 15,000 psi)			SW					
Case Fill								
Dry, liquid fillable case								
L - Liquid filled case (Glycerin standard)				L				
Process Connection Sizes								
01 - ⅛ NPT Male								
02 - ¼ NPT Male					02			
04 - ½ NPT Male								
RW - SAE 7/16 & 20 Straight thread								
EJ - 7/16 X 20 UNF-3A 37° flare								
KJ - ¼ Straight JIS, BSP - 1009SW								
KA - ¼ Tapered JIS, BSP - 1009SW								
13 - G ¼″ DIN								
JP - ¼″ Tubing, N/A with throttle plug, N/A ranges above 6000 psi								
JQ - 6mm Tubing, N/A with throttle plug, N/A ranges above 6000 psi								
JL - 9/16″ 18 UNF-2A, N/A on 25 1009 lower								
Connection Location								
L - Lower mount connection						L		
B - Lower back mount connection								
D - Side connection (3 o'clock)								
E - Side connection (9 o'clock)								
T - Top connection								
Options (if choosing an option(s) must include an "X")							X__	
LL - ***PLUS!***™ performance								
GV - Silicone case fill								
GX - Halocarbon case fill								
TU - Throttling device for ranges up to 1000 psi								
TS - Throttling device for ranges up to 15,000 psi								
6B - Cleaned for oxygen service								
SG - Safety glass								
PS - Polysulfone window (3½″ dial only)								
EO - Adjustable red set hand								
SH - Red set hand, stationary								
NH - SS tag wired to case								
FF - Front flange								
FW - Back flange								
UC - U-clamp								
AB - Gauges calibrated to compensate for absolute pressure								
KH - Custom calibration requirements								
HY - Hydrostatic/pneumatic testing system pressurized to 150% of rated system pressure for 5 minutes. Overload stop standard								
C4 - Individual calibration chart in accordance with ASME B40.100:2013. Accuracy traceable to N.I.S.T							C4	
SM - All SS movement								
YW - 316L SS case and ring								
Range (coding examples only, see range table for all standard ranges)								
Single Scales								
15# - 15 psi								15#
1BR - 1 bar								
1KSC - 1 kilograms per sq. cm								
100KP - 100 kilopascal								
Dual Scales								
15#/BR - 15 psi inner scale, 1 bar outer scale								
1BR/# - 1 bar inner scale, 15 psi outer scale								

All specifications are subject to change without notice.
All sales subject to standard terms and conditions.
©2017 Ashcroft Inc. Ash Bul GS-3 1009 Rev C, 08/17

ashcroft.com
info@ashcroft.com
1.800.328.8258

ASHCROFT®
Trust the shield.®

1009 Stainless Steel Case Gauge

STANDARD RANGES				
psi	bar	kPa	Mpa	kg/cm²
30IMV	-1BR	-100KP	-.1MP	-1KSC
–	-1&.6BR	-100&60KP	-.1&.06MP	-1&.6KSC
30IMV&15#	–	–	–	–
–	-1&1.5BR	-100&150KP	-.1&.15MP	-1&1.5KSC
30IMV&30#	–	–	–	–
–	-1&3BR	-100&300KP	-.1&.3MP	-1&3KSC
30IMV&60#	–	–	–	–
–	-1&5BR	-100&500KP	-.1&.5MP	-1&5KSC
30IMV&100#	–	–	–	–
–	1&9BR	-100&900KP	-.1&.9MP	-1&9KSC
15#	1BR	100KP	.1MP	1KSC
20#	–	–	–	–
–	1.6BR	160KP	.16MP	1.6KSC
30#	–	–	–	–
–	2.5BR	250KP	.25MP	2.5KSC
60#	4BR	400KP	.4MP	4KSC
–	6BR	600KP	.6MP	6KSC
100#	–	–	–	–
120#	–	–	–	–
–	10BR	1,000KP	1MP	10KSC
160#	–	–	–	–
200#	–	–	–	–
–	16BR	1,600KP	1.6MP	16KSC
300#	–	–	–	–
–	25BR	2,500KP	2.5MP	25KSC
400#	–	–	–	–
500#	–	–	–	–
600#	40BR	4,000KP	4MP	40KSC
800#	–	–	–	–
–	60BR	6,000KP	6MP	60KSC
1,000#	–	–	–	–
1,500#	100BR	10,000KP	10MP	100KSC
2,000#	–	–	–	–
–	160BR	16,000KP	16MP	160KSC
3,000#	–	–	–	–
–	250BR	25,000KP	25MP	250KSC
4,000#	–	–	–	–
5,000#	–	–	–	–
6,000#	400BR	40,000KP	40MP	400KSC
8,000#	–	–	–	–
–	600BR	60,000KP	60MP	600KSC
10,000#	–	–	–	–
15,000#	1,000BR	100,000KP	100MP	1,000KSC

All specifications are subject to change without notice.
All sales subject to standard terms and conditions.
©2017 Ashcroft Inc. Ash Bul GS-3 1009 Rev C, 08/17

ashcroft.com
info@ashcroft.com
1.800.328.8258

ASHCROFT®
Trust the shield.®

1009 Stainless Steel Case Gauge

DIMENSIONS (dimensions in [ ] are millimeters)

2½″ 1009 Lower and Back Connect

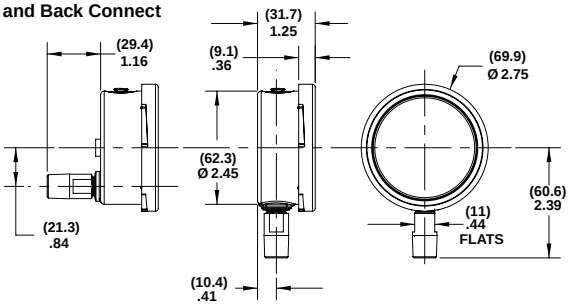

3½″ 1009 Lower and Back Connect

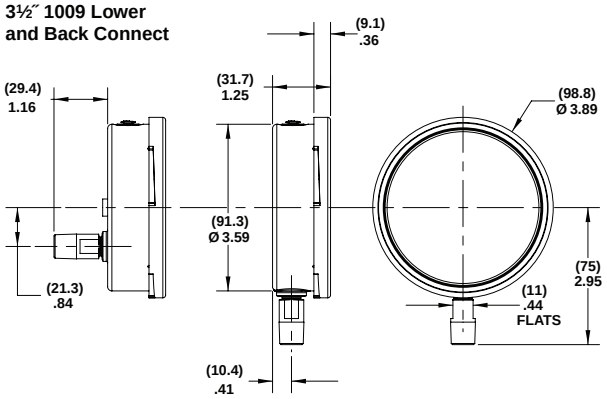

2½″ 1009 Back Connect (XUC)

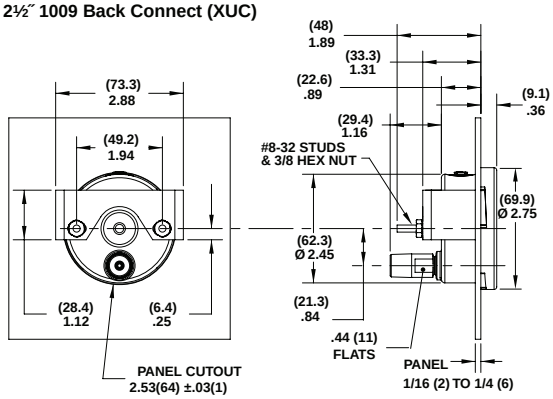

3½″ 1009 Back Connect (XUC)

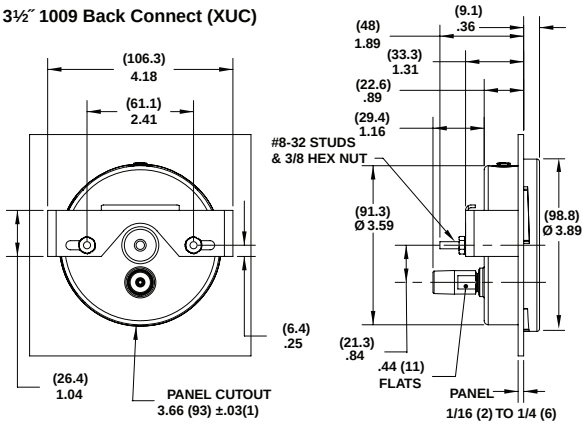

2½″ 1009 Back Connect (XFF)

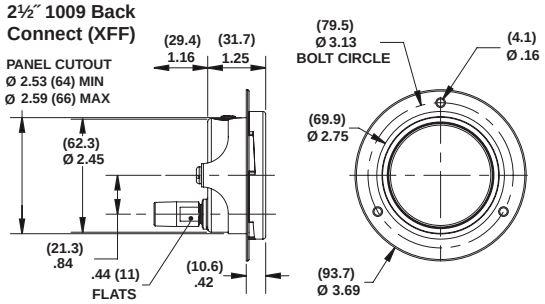

3½″ 1009 Back Connect (XFF)

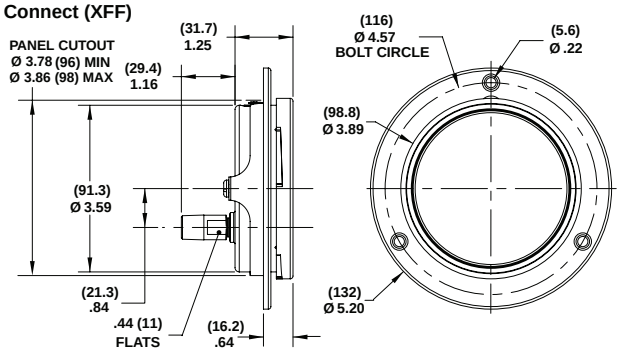

2½″ 1009 Lower and Back Connect (XFW)

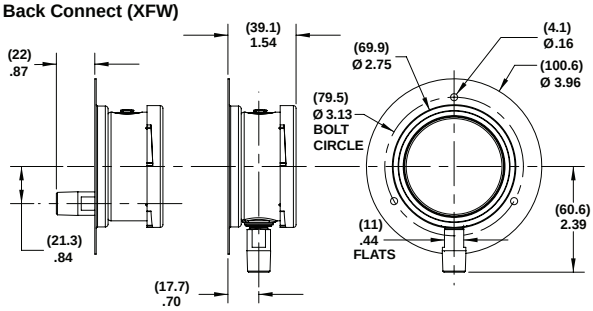

3½″ 1009 Lower and Back Connect (XFW)

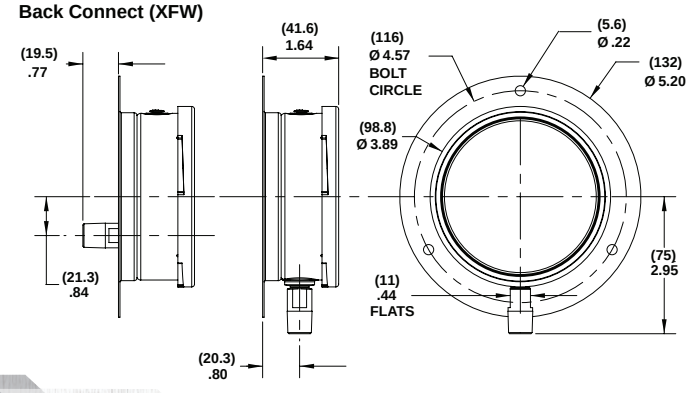

All specifications are subject to change without notice.
All sales subject to standard terms and conditions.
©2017 Ashcroft Inc. Ash Bul GS-3 1009 Rev C, 08/17

ashcroft.com
info@ashcroft.com
1.800.328.8258

ASHCROFT®
Trust the shield.®

1009 Stainless Steel Case Gauge with Tubing Connections

DIMENSIONS (dimensions in [ ] are millimeters)

2½″ 1009 Lower and Back Connect

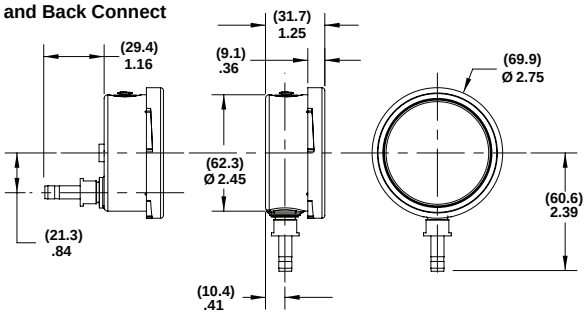

3½″ 1009 Lower and Back Connect

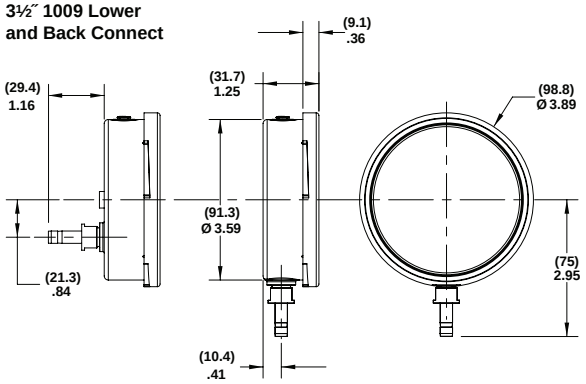

2½″ 1009 Back Connect (XUC)

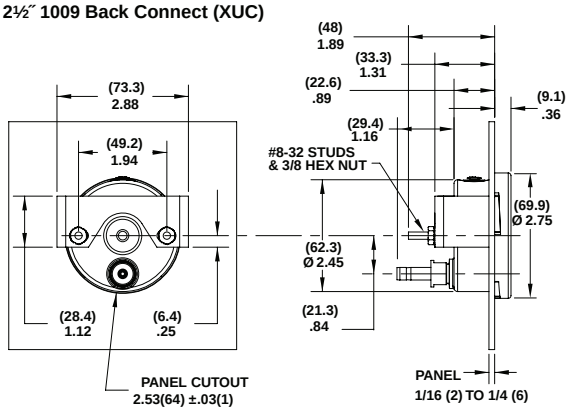

3½″ 1009 Back Connect (XUC)

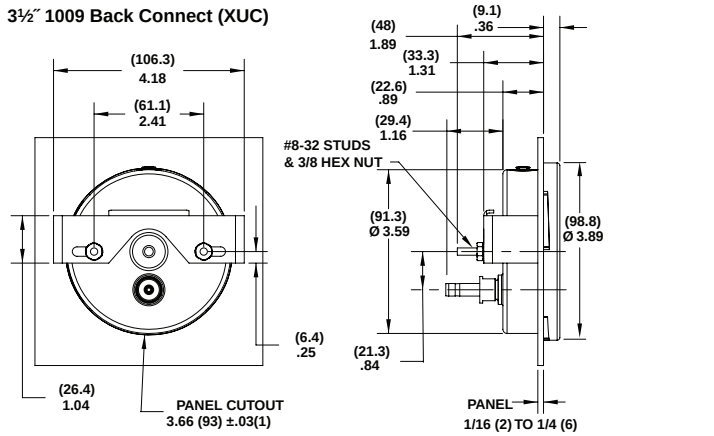

2½″ 1009 Back Connect (XFF)

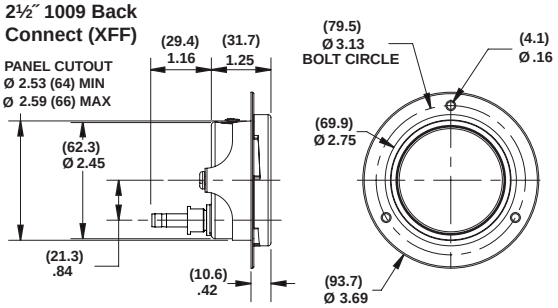

3½″ 1009 Back Connect (XFF)

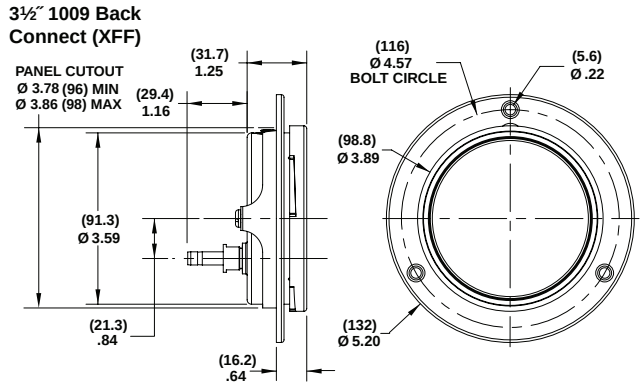

2½″ 1009 Lower and Back Connect (XFW)

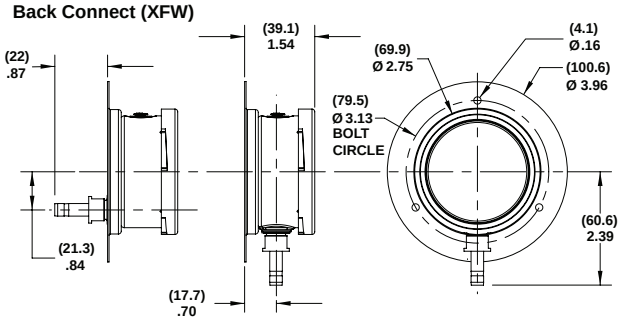

3½″ 1009 Lower and Back Connect (XFW)

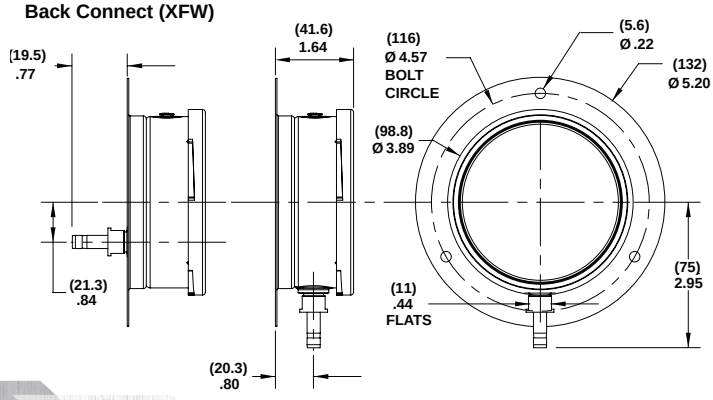

All specifications are subject to change without notice.
All sales subject to standard terms and conditions.
©2017 Ashcroft Inc. Ash Bul GS-3 1009 Rev C, 08/17

ashcroft.com
info@ashcroft.com
1.800.328.8258

ASHCROFT®
Trust the shield.™

Model T2 Pressure Transducer

LOOK FOR THESE AGENCY MARKS ON OUR PRODUCTS

APPLICATIONS

An affordable digitally compensated instrument for general industrial applications.

- *Process Automation*
- *Compressor Control*
- *Hydraulic Systems*
- *Engine Monitoring*
- *Pump Control*
- *Pneumatics*
- *Refrigeration Equipment*
- *Presses*
- *Machine Tools*
- *Other General Industrial Applications*

FEATURES

- *0.25% accuracy class*
- *Ranges 30 psi through 20,000 psi*
- *–40 to +125°C temperature capability*
- *All welded pressure construction*
- *Proven polysilicon thin film sensor*
- *Precision ASIC based electronics*
- *High EMI/RFI immunity rating*
- *Highly configurable*
- *Voltage and current outputs*
- *Choice of electrical connections*

The T2 employs a polysilicon thin film sensor with a proven long term stability. The sensor is electron beam welded to a stainless steel pressure fitting to ensure high overpressure ratings and integrity in high shock, vibration and pressure cycling applications. Through the use of a high performance ASIC and modern digital compensation techniques the T2 provides extraordinary performance over temperature. The graph that follows depicts the performance over temperature on a Total Error Band basis – the Total Error Band includes not only temperature effects but also non-linearity, hysteresis and non-repeatability.

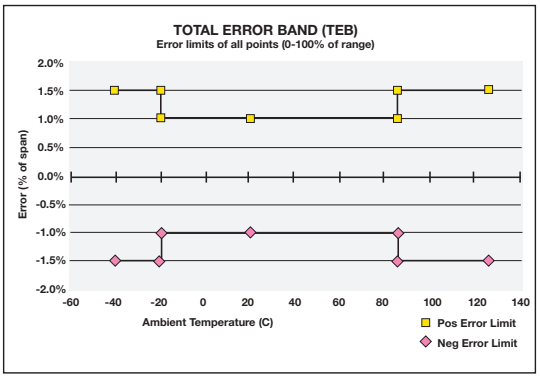

PERFORMANCE SPECIFICATIONS

Ref. Temperature, 21°C ±1°C (70°F, ±2°F)

Accuracy:

Static Accuracy Class: ±0.25% of span (BFSL Method) including non-linearity, hysteresis, non- repeatability at reference temperature

Temperature Effect:

–20°C to 85ºC <±1% of Span – Total Error Band
–40°C to –20ºC <±1.5% of Span – Total Error Band
–85°C to 125ºC <±1.5% of Span – Total Error Band
Total Error Band includes the combined effects of non-linearity (Terminal Point Method), hysteresis, non-repeatability, temperatureand zero offset and span setting errors. For higher performance availability consult factory

Stability: Less than ±0.25% span/year

Durability: Tested to 50 million cycles

ENVIRONMENTAL SPECIFICATIONS

Temperature:

Compensated	–40 to 125°C	(–40 to 257°F)
Operating	–40 to 125°C	(–40 to 257°F)
Storage	–40 to 125°C	(–40 to 257°F)

Humidity: 0 to 100% R.H., no effect

FUNCTIONAL SPECIFICATIONS

Select from over 25 pressure ranges starting at 30 psi and running through 20,000 psi. Compound (vacuum & pressure) ranges are also available, see below.

Overpressure (F.S.):	**Proof**	**Burst**
750 psi & below	200% FS	1000% FS
1500 psi	200% FS	500% FS
3000 psi	200% FS	500% FS
5000 psi	150% FS	500% FS
7500 psi	120% FS	500% FS
10,000 psi	120% FS	240% FS
20,000 psi	120% FS	240% FS

Vibration: Random vibration (20 g) over temperature range (–40° to 125°C). Exceeds typical MIL. STD. requirements

Shock: 100gs, 6 ms

Drop Test: Withstands 1 meter on concrete 3 axis

Response Time: Less than 1 msec

Warm-up Time: Less than 500 msec typical

Position Effect: Less than ±0.01% span, typical

ELECTRICAL SPECIFICATIONS

Output Signals Available:

Voltage Output	**Excitatio**	**Supply Current**
0-5 Vdc, 3 wire	9-36 Vdc	5mA
0-10 Vdc, 3 wire	14-36 Vdc	5mA
1-5 Vdc, 3 wire	9-36 Vdc	4mA
1-6 Vdc, 3 wire	9-36 Vdc	4mA
Ratiometric Output		
0.5-4.5 Vdc, 3 wire	5 Vdc ±0.5 Vdc	3.5mA
Current Output		
4-20mA, 2 wire	9-36 Vdc	

Reverse Polarity & Miswired Protected: Yes

Insulation Breakdown Voltage: 100 Vac

Insulation Resistance: Greater than 100 megohms at 100 Vdc

CE Compliance: Per EN 61326: 1997+ A1: 1998 + A2: 2001, Annex A (Heavy Industrial)

All specifications are subject to change without notice.
All sales subject to standard terms and conditions.
© Ashcroft Inc. 2017 Rev. A 07/17

Ashcroft Inc., 250 East Main Street, Stratford, CT 06614 USA
Tel: 203-385-0648 • Fax: 203-385-0408
email: info@ashcroft.com • www.ashcroft.com

Model T2 Pressure Transducer

UL Recognized component per IL-61010-1, CDA 22.2 6101-1 Electrical Equipment for Measurement, Control and Laboratory use.

PHYSICAL SPECIFICATIONS

Wetted Materials: 304SS pressure connection and 17-4PH SS sensor diaphragm

Housing: 20% Glass Reinforced Nylon, Fire retardant to UL94 V1

Available Process Connections (Male):

⅛ NPT, ¼ BSP, ¼ NPT, G¼ B, 7/16-20 UNF-2A

For other connections consult factory

Ingress Rating: Enclosure meets NEMA 4X, IP65

ELECTRICAL TERMINATION

- Pigtail: 3 feet of shielded cable, PVC jacket, 24 AWG leads
- EN 175301-803, Form A (DIN 43650, Form A)
- Bendix style 4 pin, PTO 2A-8-4P or similar
- M12 x 1, 4 pin, Circular style

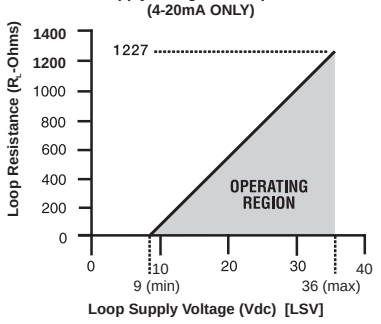

To Determine minimum loop supply voltage:

$LSV(min)=9(V)+[.022(A)*R_L]$

Where:

LSV= Loop Supply Voltage (Vdc)

$R_L = R_S + R_W$ (ohms)

R_L = Loop Resistance (ohms)

R_S = Sense Resistance (ohms) [Measuring Instrument]

R_W = Wiring Resistance (ohms)

DIMENSIONS

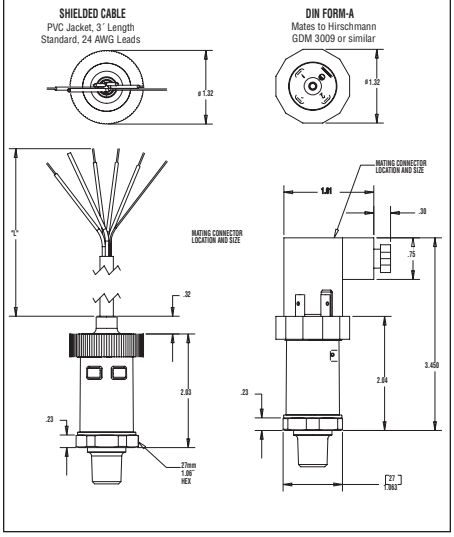

M12 and Bendix style termination designs share similar dimensions to those shown above.

How To Order

T 2 — **Type Configuration** (T2)

7 — **Accuracy ±0.25% Static Accuracy Class (BFSL)**
1.0% Total Error Band
–20°C/+85°C
1.5% Total Error Band
–40°C/-20°C, 85/125°C

Pressure Connection
M01 ⅛ NPT-male
M02 ¼ NPT-male
MEK 7/16-20 SAE-male†
MS2 ¼-19 bsp male†
MG2 G ¼ B male

Consult factory for other connections
† Not UL recognized above 10,000 psi range
†† Not CE Compliant

Output Signal
05 = 0-5 Vdc
10 = 0-10 Vdc
15 = 1-5 Vdc
16 = 1-6 Vdc
42 = 4-20mA
RM = 0.5-4.5 Vdc Ratio Metric to 5Vdc supply

Electrical Termination
EN 175301-803, Form A (DIN 43650, Form A) – Mates to Hirschmann GDM 3009 or similar
DN = no mating conn.
D0 = w/mating conn., no cable
D2 = w/mating conn. 3' shielded cable
M12 – Mates to Hirschmann 933 172-100 or similar
EW = no mating conn.
E0 = w/mating conn. no cable
E2 = w/mating conn. & 3' shielded cable
Circular 4 Pin – Mates to Amphenol††
Bendix PT06A-8-4S-SR or similar
B4 = no mating conn.††
H1 = w/mating conn., no cable††
L1 = w/mating conn. 3' shielded cable††
Pigtail – Shielded cable with PVC Jacket and 24 AWG leads
F2 = w/3' cable length
F3 = w/10' cable length
Consult factory for additional cable lengths

Pressure Ranges

psi Ranges	Compound Ranges
30# = 30 psi	**30#&vac** = 30 psi/-14.7 psi
50# = 50 psi	**45#&vac** = 45 psi/-14.7 psi
60# = 60 psi	**60#&vac** = 60 psi/-14.7 psi
100# = 100 psi	**85#&vac** = 85 psi/-14.7 psi
150# = 150 psi	**100#&vac** = 100 psi/-14.7 psi
200# = 200 psi	**150#&vac** = 150 psi/-14.7 psi
300# = 300 psi	**200#&vac** = 200 psi/-14.7 psi
400# = 400 psi	**300#&vac** = 300 psi/-14.7 psi
500# = 500 psi	
750# = 750 psi	
1000# = 1000 psi	
1500# = 1500 psi	
2000# = 2000 psi	
3000# = 3000 psi	
5000# = 5000 psi	
6000# = 6000 psi	
7500# = 7500 psi	
10000# = 10000 psi	
15000# = 15000 psi	
20000# = 20000 psi	

Ranges in bar, kPa and mPa are also available

G — **Measurement Type**
G = Gauge Pressure, Vented Housing

For sealed housing (PSIS) consult factory

X — **Optional X-Variations**
Consult Factory for Available Options

All specifications are subject to change without notice.
All sales subject to standard terms and conditions.
© Ashcroft Inc. 2017 Rev. A 07/17

Ashcroft Inc., 250 East Main Street, Stratford, CT 06614 USA
Tel: 203-385-0648 • Fax: 203-385-0408
email: info@ashcroft.com • www.ashcroft.com

Ashcroft® Accessories - Pressure Dampening Devices

THROTTIING DEVICES

A throttling device should be used when a pressure gauge is subjected to rapid pressure fluctuations, which make the gauge difficult to read because of rapid pointer movement. Such a device reduces pressure impact, slows the speed and range of pointer movement, and prolongs gauge life.

Throttling effect is obtained by installing a restricting orifice between the gauge socket connection and the Bourdon tube. Severe service applications are characterized by the presence of significant levels of pressure pulsation and/or vibration. Gauges should be protected from severe pressure pulsation by the inclusion of a dampener such as a throttle plug/screw or porous metal snubber. If the pulsation is extreme, a liquid-filled gauge, with dampener, a diaphragm seal and or capillary are recommended. A liquid-filled gauge will also last significantly longer than a comparable dry gauge when vibration is present. If the vibration levels are extreme, the only solution may be to remotely mount the gauge away from the source of vibration. Capillary tubing may be used to connect the gauge to the pressure source.

THROTTLE SCREWS

The most economical method to dampen pulsation and pressure spikes is with a throttle screw or throttle plug. Threaded or pressed into an instrument socket, the throttle screw orifice selected is based on the viscosity of the pressure fluid, rapidity of pressure fluctuations, and the amount of dampening effect desired.

A smaller orifice should be used for low viscosities, high frequencies, high pressure and reduced pointer amplitude. To accommodate these variables, throttle screws are available in these sizes: 0.0135, 0.020, 0.031, 0.040, and 0.070 inches, in brass and stainless steel. When orifice size or service condition is not specified, a 0.020-inch orifice will be supplied on Duragauge® pressure gauges and a 0.0135, on 25 or 35 1009 and 63 or 100mm 1008S and 4½″ or larger. A throttle screw/plug is standard on liquid filled or weatherproof or hermetically sealed gauges.

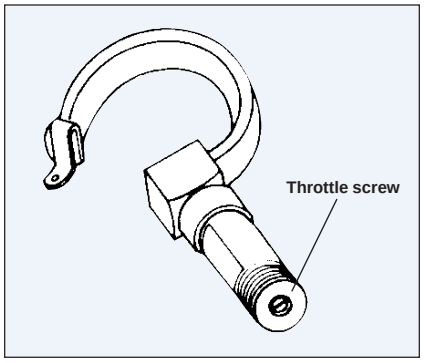

PULSATION DAMPENER

Threads onto a gauge socket and provides restriction by means of a moving pin, which may be placed in either of five different sized holes, and this allows the user to vary the amount of dampening to suit requirements. The pulsating pressure moves the pin up and down, providing a self-cleaning action. Dampeners are shipped with a pin in the “middle” hole, and may be used in either a vertical or horizontal position. Maximum pressure is 5000 psi.

Type Number	NPT Conn.	Material	Weight (oz.)
25-1106B	¼	Brass	4
50-1106B	½	Brass	8
25-1106D	¼	Steel*	4
50-1106D	½	Steel*	8
25-1106S	¼	Stainless steel	4
50-1106S	½	Stainless steel	8

* Internal parts are stainless steel.

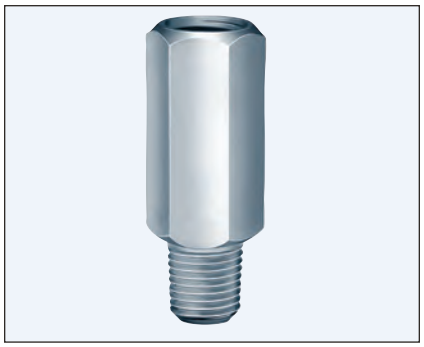

PRESSURE SNUBBER

Type Number	NPT Conn.	Material		Max psi Rating
		Housing	Filter Disc	
25-1112B	¼	Brass	316 stainless steel	10,000
50-1112B	½			
25-1112S	¼	303 stainless steel	316 stainless steel	15,000
50-1112S	½			
25-1112M	¼	R Monel	Monel	15,000
50-1112M	½			

Porosity	Max Pore Cap. Opening (Inches)	CFH at 1 psi Diff. Press.	For use with
D	0.005	6.5	Oil (50 to 500 S.S.U.)
E	0.0025	3.0	Water & Light Oils (Under 50 S.S.U.)
G	0.0008	1.1	Air, Steam and Gases
HX	0.0006	0.4	Mercury Manomometers

Used for dampening and filtering, the snubber has a metal disc available in four grades of porosity. The one best suited for the application can be selected from the chart, using the same guidelines as for throttle screws. Due to the large filter area, the snubber has less tendency to clog than orifice-type devices. All-metal construction permits the snubber to be washed in a variety of common solvents.

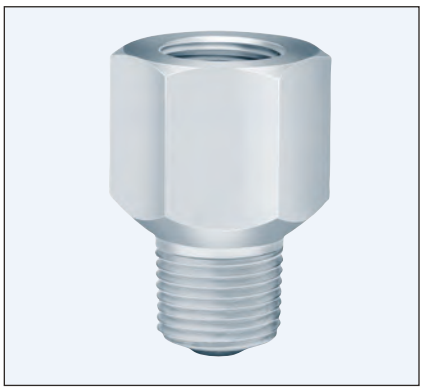

All specifications are subject to change without notice.
All sales subject to standard terms and conditions.
© Ashcroft Inc. 2014 Rev. 11/14

Ashcroft Inc., 250 East Main Street, Stratford, CT 06614 USA
Tel: 203-378-8281 • Fax: 203-385-0408
email: info@ashcroft.com • www.ashcroft.com

COMBINATION AIR RELEASE / DEGASSING VALVE

SERIES CARD PROVIDES THREE DIFFERENT VENTING FUNCTIONS

FEATURES/BENEFITS:

- **Combination of features within one valve enclosure:** Each valve consists of three functional valves...
  1. Air Release Valve, which releases air during system start up.
  2. Degassing Valve, which provides continuous degassing.
  3. Vacuum Relief Valve, which prevents pipeline vacuum in case of leaks or siphon.
- **Cost Efficient:** When three types of venting valves are needed, this valve will serve the function of all three.
- **Safety:** Allows safe expulsion of unwanted air in piping system.
- **Dependability:** The self-guided, high buoyancy float, in combination with the elastomeric sealed poppet assures leak tight sealing with minimal emission of process fluid.
- **Superior Design:** Simplicity of design assures reliability. The poppet seals more reliably than a ball type seal, which deforms under load.
- **Minimum Closing Pressure:** The high buoyancy float causes the valve to close tight at 0 PSI after expelling all air. Liquid will not escape. If air enters the system the valve will expel that air without allowing liquid to escape, even if the system is still under operating pressure.
- **Corrosion Resistant:** Top quality thermoplastics and elastomers resist chemical attack, and protect system purity. There are NO metal parts in the valve.

DESCRIPTION:

The CARD valve series is available in 1”, 2”, and 4” series (CARD100, CARD200, and CARD400 respectively). The valves are available in Geon PVC or Corzan CPVC plastic, and with Viton or EPDM seal materials. The valves are Normally Open (NO) when there is no pressure or liquid in the piping system. Process connections are NPT or socket. Vent side connection is NPT, with optional cap. For other material or connection requirements, please consult factory.

Maximum liquid line pressure rating is 150 PSI.

1384 Pompton Avenue, Cedar Grove, NJ 07009 USA (973) 256-3000 • Fax (973) 256-4745 • www.plastomatic.com

HOW IT WORKS:

Series CARD provides three functions. First, when a pipeline is being filled with liquid, the valve allows the air to escape through its large orifice at the same rate as the liquid is filling the pipes. This is the AIR RELEASE VALVE function. The valves are designed to be used at the industry standard pipe filling rate of approximately 1 ft. /sec (reference American Water Works Association AWWA manual M51). When the pipeline is filled, liquid will enter the valve and the high buoyancy float will rise causing the elastomeric sealed poppet to rise and shut off the large valve orifice. The high buoyancy float causes the poppet to have a large sealing force holding the large orifice tightly closed, regardless of system pressure, as long as it is higher than atmospheric pressure.

If air enters the pipeline through leaks or other means, air will enter the valve, the valve float will drop and open a small orifice that will allow the air to escape. Note that the large orifice will remain closed as long as the pressure in the pipeline remains above atmospheric. When the air has escaped, liquid will enter the valve causing the float to rise and shut the small orifice tight. This is the DEGASSING VALVE function. This mode is made possible by a combination of a lever and engineered force balanced float that allows the small degassing orifice to open even though the piping system is still under pressure. The large orifice remains closed as long as the pipeline pressure is above atmospheric.

If there is a break in the pipeline causing sudden loss of liquid, vacuum could form in the pipeline which could cause pipe collapse or unwanted siphon. In this event the body of the CARD valve will empty of liquid, the float will drop allowing the large orifice to open, which in turn allows atmospheric air into the pipeline, preventing vacuum from forming. This is the VACUUM RELIEF VALVE mode.

Important: Please note that because Series CARD is a normally-open valve, it should not be used in applications requiring a normally-closed vacuum breaker.

Note that the high buoyancy float will operate in fluids up to a specific gravity of 0.9. The float is guided within the valve body by low friction ribs that prevent it from jamming within the valve.

Installation Notes

There are many different locations within a pipeline where air valves are needed. The American Water Works Association (AWWA) manual M51 is an excellent reference source. In general, Series CARD should be installed at the highest possible point in a piping system or vessel, and it **must** be oriented upright, with the outlet vent on top. In most cases, residual liquid and/or vapor in the valve may be expelled from the outlet port just prior to valve shut-off. Therefore, it is recommended to pipe the outlet port to a safe area for hazardous liquids, or use a standpipe for non-hazardous liquids. There is an NPT thread on top of the valve in case that fluid needs to be contained or safely routed away.

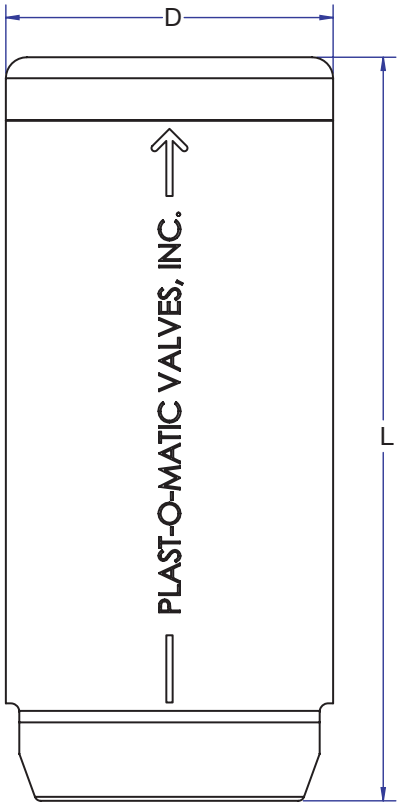

MODEL	PIPE SIZE	D IN.	D MM.	L IN.	L MM.	MAX. FLOW IN LINE SCFM	MAX. FLOW IN LINE GPM
CARD100VT-PV	1"	3.63	92.2	8.62	218.9	X	X
CARD200VT-PV	2"	4.87	123.7	11.06	280.9	X	X
CARD400VT-PV	4"	7.87	199.9	17.00	431.8	X	X

- Standard connections are threaded. For socket connection, change “T” to “S” for example CARD100VS-PV.
- Part numbers shown are PVC bodies with Viton seals. For Corzan CPVC body, use suffix “-CP” for example CARD100VT-CP. For EPDM seals change “V” to “EP” for example CARD100EPT-PV.
- For optional dust cap, consult factory.

1384 Pompton Avenue, Cedar Grove, NJ 07009 USA (973) 256-3000 • Fax (973) 256-4745 • www.plastomatic.com

PARTS DRAWING

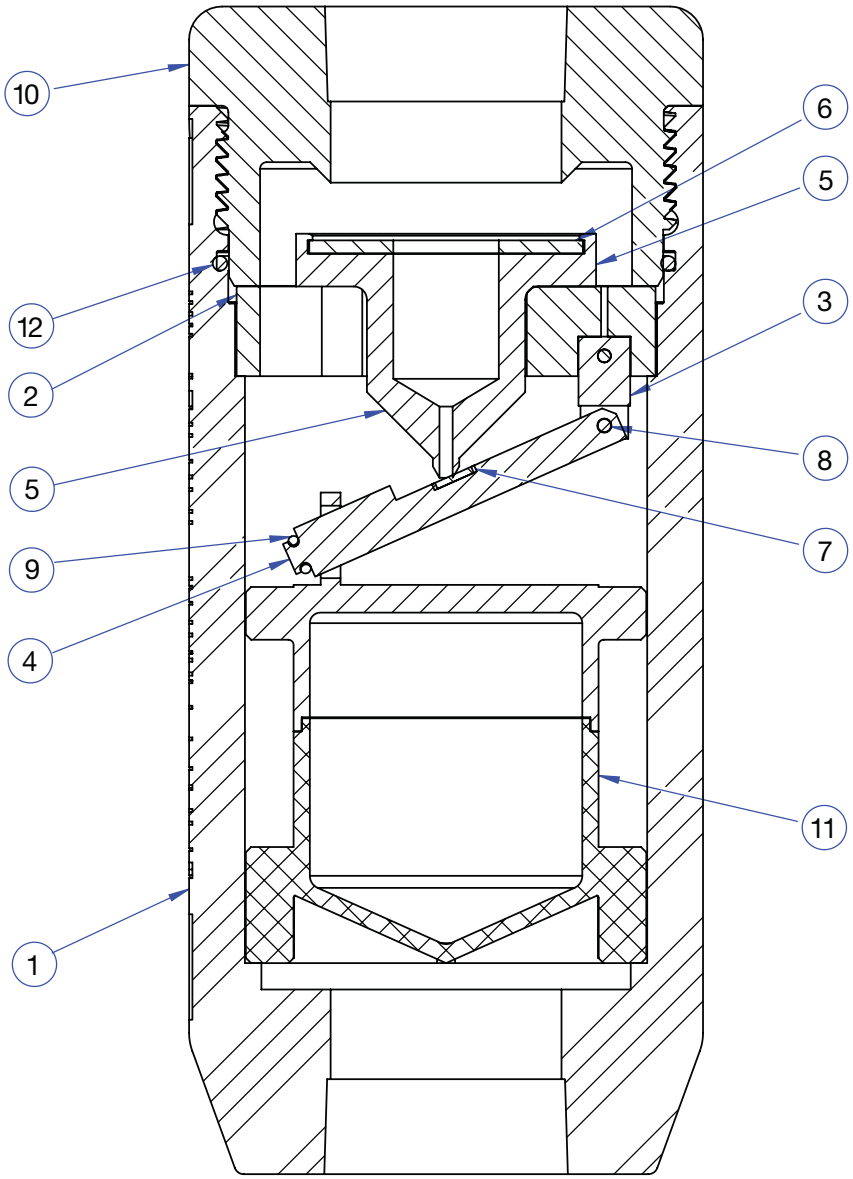

TEM NO.	DESCRIPTION	QTY.
1	THREADED BODY	1
2	MAIN SEAT HOLDER	1
3	PIN	1
4	LEVER	1
5	POPPET	1
6	LARGE SEAT DISK	1
7	SMALL SEAT DISK	1
8	HINGE PIN	2
9	O-RING	1
10	CAP	1
11	FLOAT ASSY	1
12	0-RING	1

1384 Pompton Avenue, Cedar Grove, NJ 07009 USA (973) 256-3000 • Fax (973) 256-4745 • www.plastomatic.com

SERIES CARD SIZING CHART FOR PIPELINE FILLING

These charts show the maximum fill rate for various pipe sizes, with a fill rate not exceeding a velocity of 1 ft/sec.

CARD100

The CARD100 will flow up to 5 SCFM air.

SCHD 80 PIPE SIZE	MAX. FILL RATE GPM	SCFM AIR FLOW RATE
1"	2.1	0.3
1.5"	5.3	0.7
2"	9.0	1.2
2.5"	12.8	1.7
3"	20.1	2.7
4"	35.1	4.7

CARD200

The CARD200 will flow up to 19 SCFM air.

SCHD 80 PIPE SIZE	FILL RATE GPM	SCFM AIR FLOW RATE
2"	9.0	1.2
2.5"	12.8	1.7
3"	20.1	2.7
4"	35.1	4.7
5"	55.6	7.4
6"	79.8	10.7
8"	140.1	18.7

CARD400

The CARD400 will flow up to 100 SCFM air

SCHD 80 PIPE SIZE	FILL RATE GPM	SCFM AIR FLOW RATE
4"	35.1	4.7
5"	55.6	7.4
6"	79.8	10.7
8"	140.1	18.7
10"	220.5	29.5
12"	312.2	41.7
14"	376.9	50.4
16"	494.5	66.1
18"	627.6	83.9

AIR CAPACITY TABLE FOR AIR RELEASE FUNCTION OF SERIES CARD

INLET PRESSURE PSIG	CARD100	CARD200	CARD400
10	2.0	3.6	14.5
15	2.6	4.6	18.5
20	3.0	5.4	21.7
25	3.4	6.2	24.8
30	3.9	7.0	27.9
35	4.3	7.8	31.0
40	4.7	8.5	34.1
45	5.2	9.3	37.3
50	5.6	10.1	40.4
55	6.0	10.9	43.5
60	6.5	11.7	46.6
65	6.9	12.4	49.8
70	7.3	13.2	52.9
75	7.7	14.0	56.0
80	8.2	14.8	59.1
85	8.6	15.6	62.2
90	9.0	16.3	65.4
95	9.5	17.1	68.5
100	9.9	17.9	71.6
110	10.8	19.5	77.8
120	11.6	21.0	84.1
130	12.5	22.6	90.3
140	13.4	24.1	96.6
150	14.2	25.7	102.8

Instructions: The table above shows the air flow rate in SCFM through the card valve. This is air released while the pipeline is operating under normal flowing conditions, pressurized.
Select your inlet pressure for the valve. Go to the column for your valve (e.g. Card200). The flow in SCFM is given at the appropriate pressure for your valve. For example; with a CARD200 valve operating at 50 PSIG, the valve can vent up to 10.1 SCFM.

PTFE DIAPHRAGM RELIEF, BY-PASS, ANTI-SIPHON AND BACK PRESSURE VALVES

SERIES RVDT & RVDTM

APPLICATIONS:

One valve design functions as an all-purpose backpressure valve in many applications:

- **Relief:** protects systems and equipment from over-pressure/pressure surges.
- **By-Pass:** prevents pumps from "dead heading".
- **Back-Pressure Regulator:** maintains necessary reverse pressure in closed loop systems.
- **Back-Pressure Valve:** enhance pump performance by maintaining backpressure on the pump outlet
- **Anti-Siphon:** used on the outlet of a pump wherever gravity or other downstream conditions may create negative pressure (siphon) and drain a tank. The valve is pre-set to open under pump pressure, but closes bubble-tight when the pump is shut off. Because of the design of the RVDT, this valve actually closes more tightly when unwanted siphon occurs.

PLASTIC BODY MATERIALS & SIZES:

- Geon® PVC and Corzan® CPVC body materials in 1/4", 1/2", 3/4", 1", 1 1/2", 2" and 3" sizes.
- Natural Polypropylene and Kynar® PVDF body materials in 1/4" - 2" sizes.
- PTFE body material offered in 1/4" - 1" sizes.
- Relief setting is infinitely adjustable from 5 psi to 125 psi. 5-100 psi on 3" sizes.
- Maximum inlet pressure is 150 psi.

METAL BODY MATERIALS & SIZES:

- 316L Stainless Steel body offered in 1/2", 3/4", and 1" sizes. For other grades/metals, please consult factory.
- Relief setting is infinitely adjustable from 5 psi to 125 psi.
- Maximum inlet pressure is 150 psi at 75°F. With PVC spring housing, pressure is de-rated accordingly at higher temperatures. Alternate spring housing materials are available; please consult factory.

1/4" - 3" sizes in PVC, CPVC, SS are NSF/ANSI 61 and NSF/ANSI 372 certified

1384 Pompton Avenue, Cedar Grove, NJ 07009 USA (973) 256-3000 • Fax (973) 256-4745 • www.plastomatic.com

ISO9001:2015 REGISTERED COMPANY

FEATURES:

- Diaphragm material is PTFE for all sizes and body materials, and is excellent for use with highly aggressive liquids...provides the ultimate in contamination-free sealing.
- Large diaphragm area delivers more sensitivity and less pressure drop under flow conditions.
- Non-leaching feature of fluoropolymer diaphragm makes it ideal for use with ultra-pure water and concentrated etchants, as in the semiconductor industry.
- Non-wetted u-cup seal provides a second isolation of the control spring; design includes patented Fail-Dry vent, a safety feature that provides visual warning of seal malfunction. This permits the valve to continue operation until a scheduled maintenance can be planned thereby avoiding a costly shutdown. Fail-Dry connection is 1/8" FNPT; 1/4" on 3" valve.

MOUNTING:

The 1/2" and 1" sizes in PVC, CPVC, Natural Polypro & Kynar PVDF have integral mounting lugs on the base of the body. All other sizes & materials have threaded mounting holes in the base.

GAUGE PORTS:

The 1/2" and 1" sizes in PVC, CPVC, Natural Polypro & Kynar PVDF have opposing 1/8" NPT gauge ports on the side of the body, on the same plane as the piping connections. The gauge ports are not tapped unless so ordered; incurs small charge. On the standard body, the untapped port has no effect on flow or performance. Gauge ports are not readily available on other sizes or on 1/2" PTFE body; please consult factory for alternatives.

MATERIALS, PIPING CONNECTIONS & QUALITY ASSURANCE:

Materials used in addition to the body include PTFE wetted diaphragm energized by a non-wetted FKM diaphragm. Spring housing (not wetted) is PVC. Springs (not in wetted area) are zinc-plated steel, external fasteners are stainless steel. Lock nut and adjusting screw are stainless steel on 2" sizes. Options available on quantity or special orders.

The standard valves are precision machined with female NPT connections. The 1/2" sizes in Geon PVC, Corzan CPVC, Natural Polypro & Kynar PVDF, as well as 1" sizes in Geon PVC, Natural Polypro & Kynar PVDF are molded with a choice of FNPT or socket connections. Spigot connections & flare fittings are also available on 1/4" - 1". Connections can be provided with male threads, sockets, etc. Please consult our Technical Group for more information, (973) 256-3000. Assembled valves are 100% individually tested (while pressurized) prior to shipment. All operations performed in our plant in Cedar Grove, NJ.

3" BODY STYLE

Offered in PVC or CPVC, the heavy duty 3" size is visually different from smaller sizes but internally the valve is virtually identical; it provides the same PTFE diaphragm sealing and the highest flow rates in the industry.

Each of the 3" RVDT valves are precision machined then compression fabricated and assembled by hand, and individually tested under pressure. The design facilitates connections in NPT, socket, BSP, JIS, DIN, and custom fittings.

PIPE SIZE	PVC	CPVC	Natural Polypro	PTFE	PVDF	Stainless Steel
¼"	RVDT025T-PV	RVDT025T-CP	RVDT025T-PP	RVDT025T-TF	RVDT025T-PF	*
½"	RVDTM050T-PV	RVDTM050T-CP	RVDTM050T-PP	RVDT050T-TF	RVDTM050T-PF	RVDT050T-SS
¾"	RVDT075T-PV	RVDT075T-CP	RVDT075T-PP	RVDT075T-TF	RVDT075T-PF	RVDT075T-SS
1"	RVDTM100T-PV	RVDTM100T-CP	RVDTM100T-PP	RVDT100T-TF	RVDTM100T-PF	RVDT100T-SS
1½"	RVDT150T-PV	RVDT150T-CP	RVDT150T-PP	*	RVDT150T-PF	*
2"	RVDT200T-PV	RVDT200T-CP	RVDT200T-PP	*	RVDT200T-PF	*
3"	RVDT300T-PV	RVDT300T-CP	*	*	*	*

* Consult Factory

1384 Pompton Avenue, Cedar Grove, NJ 07009 USA (973) 256-3000 • Fax (973) 256-4745 • www.plastomatic.com

RVDT(M) 1/4" - 1" FLOW CHART
TESTED WITH CITY WATER*

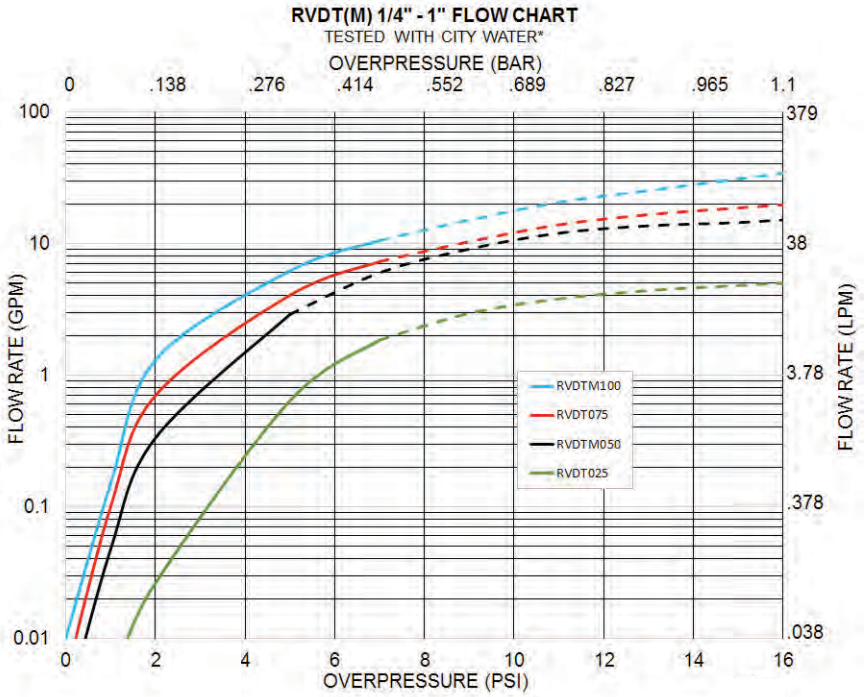

RVDT 1-1/2", 2", & 3" FLOW CHART
TESTED WITH CITY WATER*

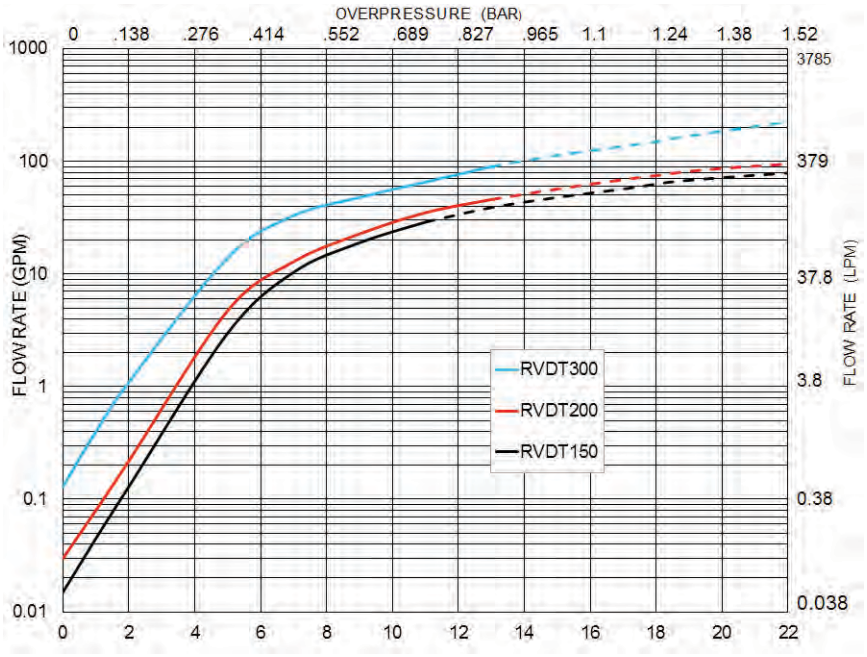

* Tested under laboratory conditions; your results may vary. Solid lines represent recommended flow range for that pipe size.

1384 Pompton Avenue, Cedar Grove, NJ 07009 USA
(973) 256-3000 • Fax (973) 256-4745 • www.plastomatic.com

MODEL	PIPE SIZE	D		D1		D2		D3	
		IN.	MM.	IN.	MM.	IN.	MM.	IN.	MM.
RVDT025	¼"	2.00	50.8	1.63	41.4	-	-	-	-
RVDT(M)050	½"	2.50	63.5	1.63	41.4	2.97	75.4	3.36	85.3
RVDT075	¾"	3.00	76.2	2.00	50.8				
RVDT(M)100	1"	3.50	88.9	2.00	50.8	4.10	104.1	4.69	119.1
RVDT150	1½"	5.00	127.0	-	-	-	-	-	-
RVDT200	2"	6.00	152.4	-	-	-	-	-	-

MODEL	PIPE SIZE	H		H1		H2		T
		IN.	MM.	IN.	MM.	IN.	MM.	THREAD SIZE/HOLE SIZE
RVDT025	¼"	6.15	156.2	0.47	11.9	4.77	121.2	#8-32
RVDT(M)050	½"	5.83	148.0	0.69	17.4	4.35	110.4	38-32/#8 THRU HOLE
RVDT075	¾"	8.98	228.1	0.78	19.8	6.17	156.7	1/4" - 20
RVDT(M)100	1"	11.38	289.1	1.19	30.2	8.38	212.9	1/4"-20 / 1/4" CLEARANCE
RVDT150	1½"	12.00	304.8	1.50	38.1	8.50	215.9	1/4" - 20
RVDT200	2"	12.68	322.1	1.75	44.5	9.88	251.0	1/4" - 20

3" BODY STYLE

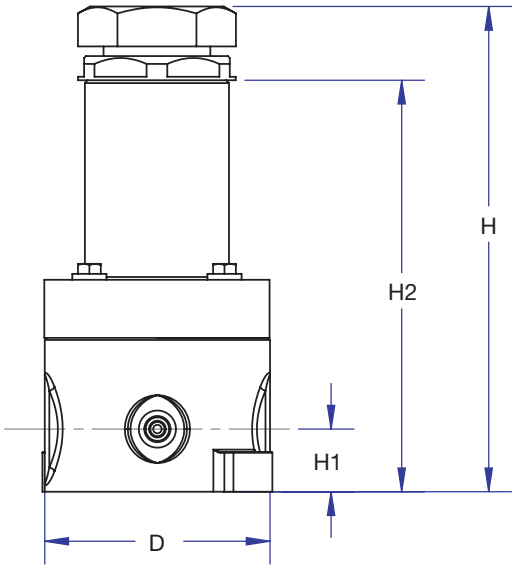

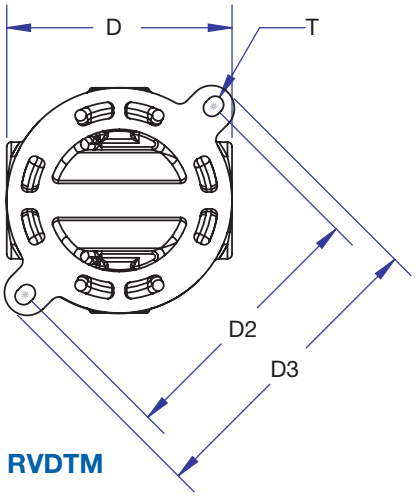

RVDTM

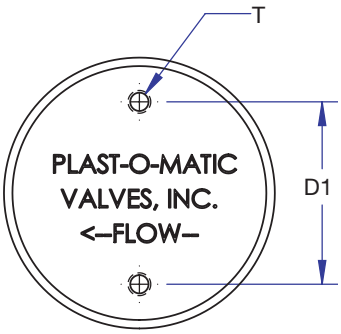

RVDT

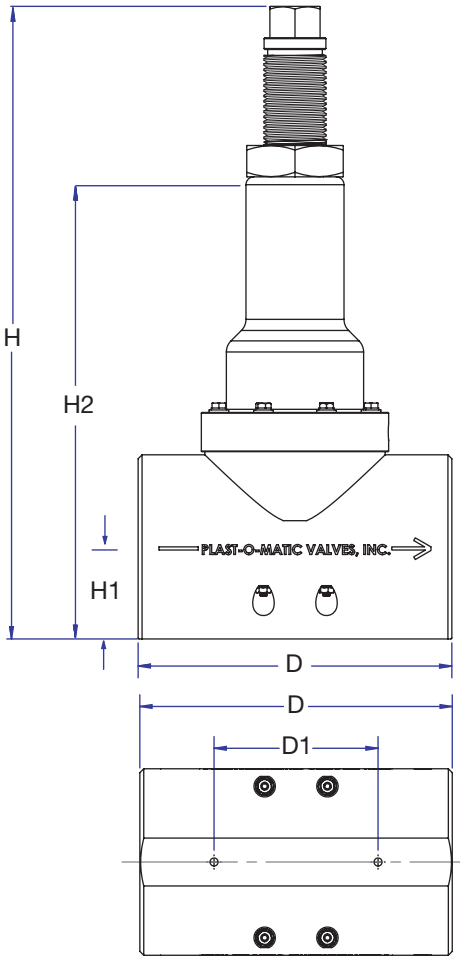

RVDT300

1384 Pompton Avenue, Cedar Grove, NJ 07009 USA (973) 256-3000 • Fax (973) 256-4745 • www.plastomatic.com

APPENDIX G

Controls Interlock Table

UPCO Treatment System Interlock and Alarm Summary

Maricopa County, AZ

ALARM TAG	INSTRUMENT TAG	ALARM DESCRIPTION				TYPE	RESPONSE	INTERLOCK																						
			LIMITS	UNITS	ALARM DELAY	A=ANALOG D= DISCRETE		1A	1B	1C	1D	2A	2B	2C	2D	2E	2F	3	4	5	6	7	8	9	10	11	12	13	14
HSA-001	HS-001	Treatment Building E-Stop	NONE	NONE	5 sec	D												x											
LAHH-001	LS-001	Treatment Building Containment Pad Leak Detection	NONE	NONE	5 sec	D													x										
HSA-002	HS-002	FBR Containment Pad E-Stop	NONE	NONE	5 sec	D												x											
LAHH-002	LS-002	FBR Containment Pad Leak Detection	NONE	NONE	5 sec	D														x									
LAL-003	LSL-003	Treatment Building Sump Low Water Level	NONE	NONE	5 sec	D																							
LAH-003	LSH-003	Treatment Building Sump High Water Level	NONE	NONE	5 sec	D																							
LAHH-003	LSHH-003	Treatment Building Sump High High Water Level	NONE	NONE	5 sec	D													x										
LAL-004	LSL-004	FBR Containment Sump Low Water Level	NONE	NONE	5 sec	D																							
LAH-004	LSH-004	FBR Containment Sump HIgh Water Level	NONE	NONE	5 sec	D																							
LAHH-004	LSHH-004	FBR Containment Sump High High Water Level	NONE	NONE	5 sec	D														x									
FAH-005	FS-005	Emergency Shower Activation	None	None	5 sec	D																							
LAHH-110	LS-111	EW-1 Vault Leak Detection	NONE	NONE	5 sec	D		x																					
LAHH-120	LS-112	EW-2 Vault Leak Detection	NONE	NONE	5 sec	D			x																				
LAHH-130	LS-113	IW-1 Vault Leak Detection	NONE	NONE	5 sec	D				x																			
LAHH-140	LS-114	MW-20 Vault Leak Detection	NONE	NONE	5 sec	D					x																		
LAL-101	PT-101	EW-1 Low Water Level	280	ft BTOC	10 sec	A	(1)																						
LAL-102	PT-102	EW-2 Low Water Level	240	ft BTOC	10 sec	A	(1)																						
LAL-103	PT-103	IW-1 Low Water Level	300	ft BTOC	10 sec	A	(1)																						
LAL-104	PT-104	MW-20 Low Water Level	270	ft BTOC	10 sec	A	(1)																						
LAH-101	PT-101	EW-1 High Water Level	20	ft BTOC	10 sec	A	(2)																						
LAH-102	PT-102	EW-2 High Water Level	20	ft BTOC	10 sec	A	(2)																						
LAH-103	PT-103	IW-1 High Water Level	20	ft BTOC	10 sec	A	(2)																						
LAH-104	PT-104	MW-20 High Water Level	20	ft BTOC	10 sec	A	(2)																						
LALL-101	PT-101	EW-1 Low Low Water Level	290	ft BTOC	10 sec	A		x																					
LALL-102	PT-102	EW-2 Low Low Water Level	250	ft BTOC	10 sec	A			x																				
LALL-103	PT-103	IW-1 Low Low Water Level	310	ft BTOC	10 sec	A				x																			
LALL-104	PT-104	MW-20 Low Low Water Level	280	ft BTOC	10 sec	A					x																		
YA-101	P-101	EW-1 Pump Fault	NONE	NONE	5 sec	D		x																					
YA-102	P-102	EW-2 Pump Fault	NONE	NONE	5 sec	D			x																				
YA-103	P-103	IW-1 Pump Fault	NONE	NONE	5 sec	D				x																			
YA-104	P-104	MW-20 Pump Fault	NONE	NONE	5 sec	D					x																		
PAL-111	PT-111	EW-1 Manifold Low Pressure	5	psi	10 sec	A																							
PAL-112	PT-112	EW-2 Manifold Low Pressure	5	psi	10 sec	A																							
PAL-113	PT-113	IW-1 Manifold Low Pressure	5	psi	10 sec	A																							
PAL-114	PT-114	MW-20 Manifold Low Pressure	5	psi	10 sec	A																							
PAH-111	PT-111	EW-1 Manifold High Pressure	50	psi	5 sec	A																							
PAH-112	PT-112	EW-2 Manifold High Pressure	50	psi	5 sec	A																							
PAH-113	PT-113	IW-1 Manifold High Pressure	50	psi	5 sec	A																							
PAH-114	PT-114	MW-20 Manifold High Pressure	50	psi	5 sec	A																							
PALL-111	PT-111	EW-1 Manifold Low Low Pressure	2	psi	10 sec	A		x																					
PALL-112	PT-112	EW-2 Manifold Low Low Pressure	2	psi	10 sec	A			x																				
PALL-113	PT-113	IW-1 Manifold Low Low Pressure	2	psi	10 sec	A				x																			
PALL-114	PT-114	MW-20 Manifold Low Low Pressure	2	psi	10 sec	A					x																		
PAHH-111	PT-111	EW-1 Manifold High High Pressure	50	psi	5 sec	A		x																					
PAHH-112	PT-112	EW-2 Manifold High High Pressure	50	psi	5 sec	A			x																				
PAHH-113	PT-113	IW-1 Manifold High High Pressure	50	psi	5 sec	A				x																			
PAHH-114	PT-114	MW-20 Manifold High High Pressure	50	psi	5 sec	A					x																		
FAL-111	FIT-111	EW-1 Manifold Low Flow	2	gpm	10 sec	A																							
FAL-112	FIT-112	EW-2 Manifold Low Flow	5	gpm	10 sec	A																							
FAL-113	FIT-113	IW-1 Manifold Low Flow	2	gpm	10 sec	A																							
FAL-114	FIT-114	MW-20 Manifold Low Flow	2	gpm	10 sec	A																							
FAH-111	FIT-111	EW-1 Manifold High Flow	15	gpm	5 sec	A																							
FAH-112	FIT-112	EW-2 Manifold High Flow	25	gpm	5 sec	A																							
FAH-113	FIT-113	IW-1 Manifold High Flow	15	gpm	5 sec	A																							
FAH-114	FIT-114	MW-20 Manifold High Flow	15	gpm	5 sec	A																							
FALL-111	FIT-111	EW-1 Manifold Low Low Flow	1	gpm	10 sec	A		x																					
FALL-112	FIT-112	EW-2 Manifold Low Low Flow	2	gpm	10 sec	A			x																				
FALL-113	FIT-113	IW-1 Manifold Low Low Flow	1	gpm	10 sec	A				x																			
FALL-114	FIT-114	MW-20 Manifold Low Low Flow	1	gpm	10 sec	A					x																		
ZAC-111	FV-111	EW-1 Manifold Valve Close Fault	NONE	NONE	5 sec	D																							
ZAC-112	FV-112	EW-2 Manifold Valve Close Fault	NONE	NONE	5 sec	D																							
ZAC-113	FV-113	IW-1 Manifold Valve Close Fault	NONE	NONE	5 sec	D																							
ZAC-114	FV-114	MW-20 Manifold Valve Close Fault	NONE	NONE	5 sec	D																							
ZAO-111	FV-111	EW-1 Manifold Valve Open Fault	NONE	NONE	5 sec	D																							
ZAO-112	FV-112	EW-2 Manifold Valve Open Fault	NONE	NONE	5 sec	D																							

UPCO Treatment System Interlock and Alarm Summary

Maricopa County, AZ

ALARM TAG	INSTRUMENT TAG	ALARM DESCRIPTION				TYPE	RESPONSE	INTERLOCK																					
			LIMITS	UNITS	ALARM DELAY	A=ANALOG D= DISCRETE		1A	1B	1C	1D	2A	2B	2C	2D	2E	2F	3	4	5	6	7	8	9	10	11	12	13	14
ZAO-113	FV-113	IW-1 Manifold Valve Open Fault	NONE	NONE	5 sec	D																							
ZAO-114	FV-114	MW-20 Manifold Valve Open Fault	NONE	NONE	5 sec	D																							
FAL-200	FIT-200	Influent Low Flow Alarm	5	gpm	10 sec	A																							
FAH-200	FIT-200	Influent High Flow Alarm	80	gpm	10 sec	A																							
FALL-200	FIT-200	Influent Low Low Flow Alarm	2	gpm	10 sec	A																x							
LAL-200	PT-200	Influent Tank Low Level Warning	1500	gal	30 sec	A	(3)																						
LAH-200	PT-200	Influent Tank High Level Warning	2500	gal	30 sec	A	(4)																						
LALL-200	PT-200	Influent Tank Low Low Level	800	gal	5 sec	A																		x					
LAHH-200	PT-200	Influent Tank High High Level	3750	gal	5 sec	A																	x						
LALL-201	LSLL-201	Influent Tank Low Low Level Switch	750	gal	5 sec	D																		x					
LAHH-201	LSHH-201	Influent Tank High High Level Switch	3800	gal	5 sec	D																	x				x		
FALL-201	FIT-201	FBR Transfer Pump Low Low Flow	5	gpm	10 sec	A																		x					
FAL-201	FIT-201	FBR Transfer Pump Low Flow	10	gpm	10 sec	A																							
FAH-201	FIT-201	FBR Transfer Pump High Flow	80	gpm	10 sec	A																							
FAHH-201	FIT-201	FBR Transfer Pump High High Flow	100	gpm	10 sec	A																		x					
PAL-201	PT-201	FBR Transfer Pump Low Discharge Pressure Alarm	5	psi	10 sec	A																							
PAH-201	PT-201	FBR Transfer Pump High Discharge Pressure Alarm	40	psi	10 sec	A																							
PAHH-201	PT-201	FBR Transfer Pump High High Discharge Pressure Alarm	50	psi	10 sec	A																		x					
YA-201	P-201	FBR Tranfer Pump Fault	NONE	NONE	5 sec	D																		x					
LAL-210	PT-210	Backwash Conditioning Tank Low Level	6500	gal	5 sec	A	(5)																						
LAH-210	PT-210	Backwash Conditioning Tank High Level	10000	gal	5 sec	A	(6)																						
LALL-210	PT-210	Backwash Conditioning Tank Low Low Level	5500	gal	5 sec	A																							x
LAHH-210	PT-210	Backwash Conditioning Tank High High Level	12500	gal	5 sec	A																						x	
LALL-211	LSLL-211	Backwash Conditioning Tank Low Low Switch	5500	gal	5 sec	D																							x
LAHH-211	LSHH-211	Backwash Conditioning Tank High High Switch	12500	gal	5 sec	D																						x	
PAL-211	PT-211	Backwash Decant Low Pressure	5	psi	5 sec	A																							
PAH-211	PT-211	Backwash Decant High Pressure	25	psi	5 sec	A																							
PAHH-211	PT-211	Backwash Decant High High Pressure	25	psi	5 sec	A																							x
FAL-211	FIT-211	Backwash Decant Pump Low Flow	5	gpm	5 sec	A																							
FAH-211	FIT-211	Backwash Decant Pump High Flow	105	gpm	5 sec	A																							
FAHH-211	FIT-211	Backwash Decant Pump High High Flow	125	gpm	5 sec	A																							
YA-211	P-211	Backwash Decant Pump Fault	NONE	NONE	5 sec	D																							
ZAC-212	FV-212	Backwash Conditioning Tank Effluent Valve Close Fault	NONE	NONE	5 sec	D																							
ZAO-212	FV-212	Backwash Conditioning Tank Effluent Valve Open Fault	NONE	NONE	5 sec	D																							
FAL-301	FIT-301	FBR Fluidization Flow Low	450	gpm	5 sec	A																							
FAH-301	FIT-301	FBR Fluidization Flow High	575	gpm	5 sec	A																							
FAHH-301	FIT-301	FBR Fluidization Flow High High	600	gpm	5 sec	A																							
PAL-301	PIT-301	FBR Fluidization Low Pressure	10	psi	5 sec	A																							
PAH-301	PIT-301	FBR Fluidization High Pressure	20	psi	5 sec	A																							
PAHH-301	PIT-301	FBR Fluidization High High Pressure	25	psi	5 sec	A																							
ZAC-307	FV-307	FBR Transfer Valve Close Fault	NONE	NONE	5 sec	D																							
ZAO-307	FV-307	FBR Transfer Valve Open Fault	NONE	NONE	5 sec	D																							
ZAC-308	FV-308	FBR Fluidization Valve Close Fault	NONE	NONE	5 sec	D																							
ZAO-308	FV-308	FBR Fluidization Valve Open Fault	NONE	NONE	5 sec	D																							
LAL-400	PT-400	FBR Effluent Equilization Tank Low Level	1250	gal	5 sec	A	(7)																						
LAH-400	PT-400	FBR Effluent Equilization Tank High Level	1750	gal	5 sec	A	(8)																						
LALL-400	PT-400	FBR Effluent Equilization Tank Low Low Level	1000	gal	5 sec	A																			x				
LAHH-400	PT-400	FBR Effluent Equilization Tank High High Level	2750	gal	5 sec	A																		x					
LALL-401	LSLL-401	FBR Effluent Equilization Tank Low Low Switch	1000	gal	5 sec	D																			x				
LAHH-401	LSHH-401	FBR Effluent Equilization Tank High High Switch	2750	gal	5 sec	D																		x					
YA-401	P-401	Filtration Transfer Pump Fault	NONE	NONE	5 sec	D																			x				
FAL-401	FIT-401	Filtration Pump Low Flow	50	gpm	5 sec	D																							
FAH-401	FIT-401	Filtration Pump High Flow	80	gpm	5 sec	D																							
FAHH-401	FIT-401	Filtration Pump High High Flow	100	gpm	5 sec	D																			x				
PAL-401	PT-401	Filtration Transfer Pump Low Pressure	5	psi	5 sec	A																							
PAH-401	PT-402	Filtration Transfer Pump High Pressure	70	psi	5 sec	A																							
PAHH-401	PT-403	Filtration Transfer Pump High High Pressure	75	psi	5 sec	A																			x				
FAL-501	FIT-501	Clean Backwash Pump Low Flow	30	gpm	5 sec	A																							
FAH-501	FIT-501	Clean Backwash Pump High Flow	80	gpm	5 sec	A																							
FAHH-501	FIT-501	Clean Backwash Pump High High Flow	90	gpm	5 sec	A																						x	
PAL-511	PT-501	Clean Backwash Pump Low Pressure	5	psi	5 sec	A																							
PAH-511	PT-502	Clean Backwash Pump High Pressure	70	psi	5 sec	A																							
PAHH-511	PT-503	Clean Backwash Pump High High Pressure	75	psi	5 sec	A																						x	
YA-501	P-501	Backwash Pump Fault	NONE	NONE	5 sec	A																						x	
ZAC-501	FV-501	Multimedia Filter Influent Valve Close Fault	NONE	NONE	5 sec	A																							
ZAO-501	FV-501	Multimedia Filter Influent Valve Open Fault	NONE	NONE	5 sec	A																							

UPCO Treatment System Interlock and Alarm Summary

Maricopa County, AZ

ALARM TAG	INSTRUMENT TAG	ALARM DESCRIPTION				TYPE	RESPONSE	INTERLOCK																					
			LIMITS	UNITS	ALARM DELAY	A=ANALOG D= DISCRETE		1A	1B	1C	1D	2A	2B	2C	2D	2E	2F	3	4	5	6	7	8	9	10	11	12	13	14
ZAC-502	FV-502	Multimedia Filter Effluent Valve Close Fault	NONE	NONE	5 sec	A																							
ZAO-502	FV-502	Multimedia Filter Effluent Valve Open Fault	NONE	NONE	5 sec	A																							
PAH-501	PT-501	Multimedia Filter High Influent Pressure	75	psi	5 sec	A																							
PAHH-501	PT-501	Multimedia Filter High High Influent Pressure	80	psi	5 sec	A																			x				
PAH-502	PT-502	Multimedia Filter High Backwash Pressure	75	psi	5 sec	A																							
PAHH-502	PT-502	Multimedia Filter High High Backwash Pressure	80	psi	5 sec	A																						x	
DPAH-501	PT-501/502	Multimedia Filter High High Differential Pressure	10	psi	5 sec	A	(9)																						
ZAC-503	FV-503	Multimedia Filter Backwash Influent Valve Close Fault	NONE	NONE	5 sec	A																							
ZAO-503	FV-503	Multimedia Filter Backwash Influent Valve Open Fault	NONE	NONE	5 sec	A																							
ZAC-504	FV-504	Multimedia Filter Backwash Effluent Valve Close Fault	NONE	NONE	5 sec	A																							
ZAO-504	FV-504	Multimedia Filter Backwash Effluent Valve Open Fault	NONE	NONE	5 sec	A																							
PAH-601	PT-601	T-601 IX Vessel High Influent Pressure	60	psi	5 sec	A																							
PAHH-601	PT-601	T-601 IX Vessel High High Influent Pressure	70	psi	5 sec	A																			x				
PAH-602	PT-602	T-601 IX Vessel High Effluent Pressure	60	psi	5 sec	A																							
PAHH-602	PT-602	T-601 IX Vessel High High Effluent Pressure	70	psi	5 sec	A																			x				
DPAH-601	PT-601/602	T-601 IX Vessel High Differential Pressure	5	psi	5 sec	A																							
PAH-603	PT-603	T-602 IX Vessel High Influent Pressure	60	psi	5 sec	A																							
PAHH-603	PT-603	T-602 IX Vessel High High Influent Pressure	70	psi	5 sec	A																			x				
PAH-604	PT-604	T-602 IX Vessel High Effluent Pressure	60	psi	5 sec	A																							
PAHH-604	PT-604	T-602 IX Vessel High High Effluent Pressure	70	psi	5 sec	A																			x				
DPAH-602	PT-603/604	T-602 IX Vessel High Differential Pressure	5	psi	5 sec	A																							
PAH-605	PT-605	T-603 IX Vessel High Influent Pressure	60	psi	5 sec	A																							
PAHH-605	PT-605	T-603 IX Vessel High High Influent Pressure	70	psi	5 sec	A																			x				
PAH-606	PT-606	T-603 IX Vessel High Effluent Pressure	60	psi	5 sec	A																							
PAHH-606	PT-606	T-603 IX Vessel High High Effluent Pressure	70	psi	5 sec	A																			x				
DPAH-603	PT-605/606	T-603 IX Vessel High Differential Pressure	5	psi	5 sec	A																							
PAH-607	PT-607	T-604 IX Vessel High Influent Pressure	60	psi	5 sec	A																							
PAHH-607	PT-607	T-604 IX Vessel High High Influent Pressure	70	psi	5 sec	A																			x				
PAH-608	PT-608	T-604 IX Vessel High Effluent Pressure	60	psi	5 sec	A																							
PAHH-608	PT-608	T-604 IX Vessel High High Effluent Pressure	70	psi	5 sec	A																			x				
DPAH-604	PT-607/608	T-604 IX Vessel High Differential Pressure	5	psi	5 sec	A																							
LAL-700	PT-700	Injection Equilization Tank Low Level	2500	gal	5 sec	D	(10)																						
LAH-700	PT-700	Injection Equilization Tank High Level	3500	gal	5 sec	A	(11)																						
LALL-700	PT-700	Injection Equilization Tank Low Low Level	1000	gal	5 sec	D																				x			
LAHH-700	PT-700	Injection Equilization Tank High High Level	3750	gal	5 sec	A																			x				
LALL-701	LSLL-701	Injection Equilization Tank Low Low Switch	250	gal	5 sec	A																				x			
LAHH-701	LSHH-701	Injection Equilization Tank High High Switch	3800	gal	5 sec	A																			x				
FAL-701	FIT-701	Injection Pump Low Flow	20	gpm	5 sec	A																							
FAH-701	FIT-701	Injection Pump High Flow	80	gpm	5 sec	A																							
FALL-701	FIT-701	Injection Pump Low Low Flow	2	gpm	5 sec	A																							
FAHH-701	FIT-701	Injection Pump High High Flow	80	gpm	5 sec	A																					x		
PAL-701	PIT-701	Inection Pump Low Pressure	20	psi	5 sec	A																							
PAH-701	PIT-701	Injection Pump High Pressure	80	psi	5 sec	A																							
PAHH-701	PIT-701	Injection Pump High High Pressure	85	psi	5 sec	A																					x		
YA-701	P-701	Injection Pump Fault	NONE	NONE	5 sec	A																					x		
ZAO-711	FV-711	IW-3 Manifold Valve Open Fault	NONE	NONE	5 sec	D						x																	
ZAO-712	FV-712	MW-5 Manifold Valve Open Fault	NONE	NONE	5 sec	D							x																
ZAO-713	FV-713	MW-11 Manifold Valve Open Fault	NONE	NONE	5 sec	D								x															
ZAO-714	FV-714	RW-1 Manifold Valve Open Fault	NONE	NONE	5 sec	D									x														
ZAO-715	FV-715	RW-2 Manifold Valve Open Fault	NONE	NONE	5 sec	D										x													
ZAO-716	FV-716	RW-3 Manifold Valve Open Fault	NONE	NONE	5 sec	D											x												
ZAC-711	FV-711	IW-3 Manifold Valve Close Fault	NONE	NONE	5 sec	D						x																	
ZAC-712	FV-712	MW-5 Manifold Valve Close Fault	NONE	NONE	5 sec	D							x																
ZAC-713	FV-713	MW-11 Manifold Valve Close Fault	NONE	NONE	5 sec	D								x															
ZAC-714	FV-714	RW-1 Manifold Valve Close Fault	NONE	NONE	5 sec	D									x														
ZAC-715	FV-715	RW-2 Manifold Valve Close Fault	NONE	NONE	5 sec	D										x													
ZAC-716	FV-716	RW-3 Manifold Valve Close Fault	NONE	NONE	5 sec	D											x												
PAL-711	PT-711	IW-3 Manifold Low Pressure	2	psi	10 sec	A																							
PAL-712	PT-712	MW-5 Manifold Low Pressure	2	psi	10 sec	A																							
PAL-713	PT-713	MW-11 Manifold Low Pressure	2	psi	10 sec	A																							
PAL-714	PT-714	RW-1 Manifold Low Pressure	2	psi	10 sec	A																							
PAL-715	PT-715	RW-2 Manifold Low Pressure	2	psi	10 sec	A																							
PAL-716	PT-716	RW-3 Manifold Low Pressure	2	psi	10 sec	A																							
PAH-711	PT-711	IW-3 Manifold High Pressure	50	psi	5 sec	A																							
PAH-712	PT-712	MW-5 Manifold High Pressure	50	psi	5 sec	A																							

UPCO Treatment System Interlock and Alarm Summary

Maricopa County, AZ

ALARM TAG	INSTRUMENT TAG	ALARM DESCRIPTION				TYPE	RESPONSE	INTERLOCK																					
			LIMITS	UNITS	ALARM DELAY	A=ANALOG D= DISCRETE		1A	1B	1C	1D	2A	2B	2C	2D	2E	2F	3	4	5	6	7	8	9	10	11	12	13	14
PAH-713	PT-713	MW-11 Manifold High Pressure	50	psi	5 sec	A																							
PAH-714	PT-714	RW-1 Manifold High Pressure	50	psi	5 sec	A																							
PAH-715	PT-715	RW-2 Manifold High Pressure	50	psi	5 sec	A																							
PAH-716	PT-716	RW-3 Manifold High Pressure	50	psi	5 sec	A																							
PALL-711	PT-711	IW-3 Manifold Low Low Pressure	2	psi	10 sec	A						x																	
PALL-712	PT-712	MW-5 Manifold Low Low Pressure	2	psi	10 sec	A							x																
PALL-713	PT-713	MW-11 Manifold Low Low Pressure	2	psi	10 sec	A								x															
PALL-714	PT-714	RW-1 Manifold Low Low Pressure	2	psi	10 sec	A									x														
PALL-715	PT-715	RW-2 Manifold Low Low Pressure	2	psi	10 sec	A										x													
PALL-716	PT-716	RW-3 Manifold Low Low Pressure	2	psi	10 sec	A											x												
PAHH-711	PT-711	IW-3 Manifold High High Pressure	50	psi	5 sec	A						x																	
PAHH-712	PT-712	MW-5 Manifold High High Pressure	50	psi	5 sec	A							x																
PAHH-713	PT-713	MW-11 Manifold High High Pressure	50	psi	5 sec	A								x															
PAHH-714	PT-714	RW-1 Manifold High High Pressure	50	psi	5 sec	A									x														
PAHH-715	PT-715	RW-2 Manifold High High Pressure	50	psi	5 sec	A										x													
PAHH-716	PT-716	RW-3 Manifold High High Pressure	50	psi	5 sec	A											x												
FAL-711	FIT-711	IW-3 Manifold Low Flow	2	gpm	10 sec	A																							
FAL-712	FIT-712	MW-5 Manifold Low Flow	2	gpm	10 sec	A																							
FAL-713	FIT-713	MW-11 Manifold Low Flow	2	gpm	10 sec	A																							
FAL-714	FIT-714	RW-1 Manifold Low Flow	2	gpm	10 sec	A																							
FAL-715	FIT-715	RW-2 Manifold Low Flow	2	gpm	10 sec	A																							
FAL-716	FIT-716	RW-3 Manifold Low Flow	2	gpm	10 sec	A																							
FAH-711	FIT-711	IW-3 Manifold High Flow	60	gpm	5 sec	A																							
FAH-712	FIT-712	MW-5 Manifold High Flow	25	gpm	5 sec	A																							
FAH-713	FIT-713	MW-11 Manifold High Flow	25	gpm	5 sec	A																							
FAH-714	FIT-714	RW-1 Manifold HighFlow	15	gpm	5 sec	A																							
FAH-715	FIT-715	RW-2 Manifold High Flow	15	gpm	5 sec	A																							
FAH-716	FIT-716	RW-3 Manifold High Flow	15	gpm	5 sec	A																							
FALL-711	FIT-711	IW-3 Manifold Low Low Flow	2	gpm	10 sec	A						x																	
FALL-712	FIT-712	MW-5 Manifold Low Low Flow	2	gpm	10 sec	A							x																
FALL-713	FIT-713	MW-11 Manifold Low Low Flow	2	gpm	10 sec	A								x															
FALL-714	FIT-714	RW-1 Manifold Low Low Flow	2	gpm	10 sec	A									x														
FALL-715	FIT-715	RW-2 Manifold Low Low Flow	2	gpm	10 sec	A										x													
FALL-716	FIT-716	RW-3 Manifold Low Low Flow	2	gpm	10 sec	A											x												
LAL-721	PT-721	Injection Well Low Water Level	240	ft BTOC	10 sec	A																							
LAL-722	PT-722	Injection Well Low Water Level	270	ft BTOC	10 sec	A																							
LAL-723	PT-723	Injection Well Low Water Level	270	ft BTOC	10 sec	A																							
LAL-724	PT-724	Injection Well Low Water Level	270	ft BTOC	10 sec	A																							
LAL-725	PT-725	Injection Well Low Water Level	270	ft BTOC	10 sec	A																							
LAL-726	PT-726	Injection Well Low Water Level	200	ft BTOC	10 sec	A																							
LAH-721	PT-721	Injection Well High Water Level	205	ft BTOC	10 sec	A	(12)																						
LAH-722	PT-722	Injection Well High Water Level	230	ft BTOC	10 sec	A	(12)																						
LAH-723	PT-723	Injection Well High Water Level	230	ft BTOC	10 sec	A	(12)																						
LAH-724	PT-724	Injection Well High Water Level	230	ft BTOC	10 sec	A	(12)																						
LAH-725	PT-725	Injection Well High Water Level	155	ft BTOC	10 sec	A	(12)																						
LAH-726	PT-726	Injection Well High Water Level	175	ft BTOC	10 sec	A	(12)																						
LAHH-721	PT-721	High High Injection Well Water Level	195	ft BTOC	5 sec	A						x																	
LAHH-722	PT-722	High High Injection Well Water Level	220	ft BTOC	5 sec	A							x																
LAHH-723	PT-723	High High Injection Well Water Level	220	ft BTOC	5 sec	A								x															
LAHH-724	PT-724	High High Injection Well Water Level	220	ft BTOC	5 sec	A									x														
LAHH-725	PT-725	High High Injection Well Water Level	145	ft BTOC	5 sec	A										x													
LAHH-726	PT-726	High High Injection Well Water Level	165	ft BTOC	5 sec	A											x												
LAHH-731	LS-731	Injection Vault Leak Detection	NONE	NONE	5 sec	D						x																	
LAHH-732	LS-732	Injection Vault Leak Detection	NONE	NONE	5 sec	D							x																
LAHH-733	LS-733	Injection Vault Leak Detection	NONE	NONE	5 sec	D								x															
LAHH-734	LS-734	Injection Vault Leak Detection	NONE	NONE	5 sec	D									x														
LAHH-735	LS-735	Injection Vault Leak Detection	NONE	NONE	5 sec	D										x													
LAHH-736	LS-736	Injection Vault Leak Detection	NONE	NONE	5 sec	D											x												
PAH-807	PT-807	Bag Filter High Influent Pressure	50	psi	5 sec	A																							
PAHH-807	PT-807	Bag Filter High High Influent Pressure	75	psi	5 sec	A					x																		
PAH-808	PT-808	Bag Filter High Effluent Pressure	50	psi	5 sec	A																							
PAHH-808	PT-808	Bag Filter High High Effluent Pressure	50	psi	5 sec	A					x																		
DPAH-808	PT-807/808	Bag Filter High Differential Pressure	8	psi	5 sec	A																							
DPAHH-808	PT-807/808	Bag Filter High High Differential Pressure	12	psi	5 sec	A					x																		
PAH-801	PT-801	T-801 GAC Vessel High Influent Pressure	50	psi	5 sec	A																							

UPCO Treatment System Interlock and Alarm Summary

Maricopa County, AZ

ALARM TAG	INSTRUMENT TAG	ALARM DESCRIPTION				TYPE	RESPONSE	INTERLOCK																						
			LIMITS	UNITS	ALARM DELAY	A=ANALOG D= DISCRETE		1A	1B	1C	1D	2A	2B	2C	2D	2E	2F	3	4	5	6	7	8	9	10	11	12	13	14
PAHH-801	PT-801	T-801 GAC Vessel HighHigh Influent Pressure	75	psi	5 sec	A					x																		
PAH-802	PT-802	T-801 GAC Vessel High Effluent Pressure	50	psi	5 sec	A																							
PAHH-802	PT-802	T-801 GAC Vessel High High Effluent Pressure	75	psi	5 sec	A																							
DPAH-801	PT-801/802	T-801 GAC Vessel High Differential Pressure	3	psi	5 sec	A																							
DPAHH-801	PT-801/802	T-801 GAC Vessel High High Differential Pressure	5	psi	5 sec	A					x																		
PAH-805	PT-805	T-803 GAC Vessel High Influent Pressure	50	psi	5 sec	A																							
PAHH-805	PT-805	T-803 GAC Vessel High High Influent Pressure	75	psi	5 sec	A					x																		
PAH-806	PT-806	T-803 GAC Vessel High Effluent Pressure	50	psi	5 sec	A																							
PAHH-806	PT-806	T-803 GAC Vessel High High Effluent Pressure	75	psi	5 sec	A																							
DPAH-803	PT-805/806	T-803 GAC Vessel High Differential Pressure	3	psi	5 sec	A																							
DPAHH-803	PT-805/806	T-803 GAC Vessel High High Differential Pressure	5	psi	5 sec	A					x																		
PAL-901	PT-901	Air Compressor Low Pressure	85	psi	5 sec	A																							
PALL-901	PT-901	Air Compressor Low Low Pressure	70	psi	5 sec	A															X								

UPCO Treatment System Alarm Responses
Maricopa County, AZ

Response	Response Description	SCADA Notification	Email Notification
(0)	Initiate FBR Recirculation	Y	Y
(1)	Decrease respective extraction pump frequency via VFD	Y	Y
(2)	Increase respective extraction pump frequency via VFD	Y	Y
(3)	Initiate recirculation and run extraction pumps until tank level reaches operation level; return to full Forward Flow once tank level is restored	Y	Y
(4)	Disable all extraction pumps (P-10X) but coninue Forward flow until tank level reaches operational level; return to full Forward Flow once tank level is restored	Y	Y
(5)	Disable P-211 and FV-212	Y	Y
(6)	Turn on P-211 and open FV-212	Y	Y
(7)	Continue Forward flow but disable P-401, FV-501, FV-502, P-701, FV-702, FV-71X (all injection wells in service); Return to full Forward Flow once tank level reaches operational level (operator adjustable)	Y	Y
(8)	Initiate FBR Recirculation but run P-401, FV-501, FV-502, P-701, FV-702, FV-71X (all injection wells in service);Return to Forward Flow once tank level reaches operational level (operator adjustable)	Y	Y
(9)	Initiate Multi-Media Filter Backwash/FBR Recirculation; if P-501 does not run (due to other interlock) then initiate FBR Recirculation solely	Y	Y
(10)	Continue Forward flow but disable P-701, FV-702, FV-71X (all injection wells in service); Return to full Forward Flow once tank level reaches operational level (operator adjustable)	Y	Y
(11)	Continue Forward flow but disable P-10X, FV-11X, P-201, FV-301, FV-212, P-211, P-401, FV-501, FV-502, FV-503, FV-504, P-501; Return to full forward flow once tank level reaches operation level gal (operator adjustable)	Y	Y
(12)	Close respective FV-71X; if LAH-71X is alleviated, open FV-71X. If not, remain closed.	Y	Y
Notes:	FBR Recirculation = P-301, P-303, P-304, P-305, P-306 on, FV-302 open. All other equipment is disabled unless otherwise stated (i.e. backwash-recirculation mode)		
	Alarms without associated interlocks/responses shall send email and SCADA notification		

UPCO Treatment System Interlock Summary
Maricopa County, AZ

INTERLOCK SCHEDULE			
Interlock #	**Title**	**Initiated by:**	**Description:**
1A	Extraction Well EW-1	FALL-111, LALL-101, LAHH-111, YA-101, PALL-111, PAHH-111	Disable pump P-101, Close FV-111
1B	Extraction Well EW-2	FALL-112, LALL-102, LAHH-112, YA-102, PALL-112, PAHH-112	Disable pump P-102, Close FV-112
1C	Extraction Well IW-1	FALL-113, LALL-103, LAHH-113, YA-103, PALL-113, PAHH-113	Disable pump P-103, Close FV-113
1D	Extraction Well MW-20	FALL-114, LALL-104, LAHH-114, PAHH-801/805/807, YA-104, PALL-114, PAHH-114	Disable pump P-104, Close FV-114
2A	Injection Well IW-3	FALL-711, LAHH-721/731, PALL-711, PAHH-711	Close valve FV-711
2B	Injection Well MW-5	FALL-712, LAHH-722/732, PALL-712, PAHH-712	Close valve FV-712
2C	Injection Well MW-11	FALL-713, LAHH-723/733, PALL-713, PAHH-713	Close valve FV-713
2D	Injection Well RW-1	FALL-714, LAHH-724/734, PALL-714, PAHH-714	Close valve FV-714
2E	Injection Well RW-2	FALL-715, LAHH-725/735, PALL-715, PAHH-715	Close valve FV-715
2F	Injection Well RW-3	FALL-716, LAHH-726/736, PALL-716, PAHH-716	Close valve FV-716
3	System E-Stop	HSA-001/002	Disable all equipment
4	Containment Pad Leak Detection	LAHH-001/003	Disable all equipment
5	FBR Pad Leak Detection	LAHH-002/004	Disable all equipment
6	Air Compressor Low Low Pressure	PALL-901	Disable all equipment
7	Influent Flow Rate Low-Low	FALL-200	Disable pumps P-101/102/103/104, Close FV-111/112/113/114
8	Influent Tank High-High Level	LAHH-200/201	Disable pumps P-003/004/101/102/103/104/211, Close FV-111/112/113/114/212
9	FBR Transfer Process	FAL-201, LALL-200/201, LAHH-400/401, PAHH-201, YA-201, FAHH-201	Disable pump P-201, Close FV-307
10	Filtration Transfer	FAHH-401,LALL-400/401, LAHH-700/701, PAHH-401/501/502/601/602/603/604/605/606/607/608, YA-401	Disable pump P-401/701, Close FV-501/502/711/712/713/714/715/716
11	Injection Equalization Low-Low Level	LALL-700/701	Disable pumps P-501/701, Close FV-503/504/711/712/713/714/715/716
12	Injection Process	FAHH-701, PAHH-701, YA-701	Disable pump P-701, Close FV-711/712/713/714/715/716
13	Backwash Process	FAHH-501, LAHH-201, LAHH-210/211, PAHH-502/511, YA-501	Disable pump P-501, Close FV-503/504
14	Backwash Decant Conditioning	LALL-210/211, PAHH-211	Disable pump P-211, Close FV-212

APPENDIX H

HVAC Specifications

SECTION 23 05 29

HANGERS AND SUPPORTS FOR HVAC PIPING AND EQUIPMENT

PART 1 - GENERAL

1.1 DESCRIPTION

A. Scope:
   1. CONTRACTOR shall provide all labor, materials, equipment and incidentals as shown, specified, and required to furnish and install hangers and supports and required appurtenances for HVAC piping and equipment as required to complete the Work.

B. Coordination:
   1. Review installation procedures under this and other Sections and coordinate the installation of items that must be installed with, or before the hangers and supports Work.
   2. Notify other contractors in advance of the installation of the hangers and supports to provide them with sufficient time for the installation of items included in their contracts that must be installed with, or before, the hangers and supports Work.

C. Related Sections:
   1. Applicable Sections of Division 23, HVAC.

1.2 REFERENCES

A. Standards referenced in this Section are listed below:
   1. American National Standards Institute, (ANSI).
      a. ANSI B1.1, Unified Inch Screw Threads, (ASME B1.1).
   2. American Society for Testing and Materials, (ASTM).
      a. ASTM A 36/A 36M, Specification for Carbon Structural Steel.
      b. ASTM A 47/A 47 M, Specification for Ferritic Malleable Iron Castings.
      c. ASTM A 307, Specification for Carbon Steel Bolts and Studs, 60,000 PSI Tensile Strength.
      d. ASTM A 575, Specification for Steel Bars, Carbon, Merchant Quality, M-Grades.
      e. ASTM A 668/A 688M, Specification for Steel Forgings, Carbon and Alloy, for General Industrial Use.
   3. Federal Specifications, (FS).
      a. FS WW-H-171, Hangers and Supports, Pipe.
   4. Manufacturer Standardization Society, (MSS).
      a. MSS SP 58, Pipe Hangers and Supports-Materials, Design and Manufacture.
      b. MSS SP 69, Pipe Hangers and Supports - Selection and Application.
   5. Underwriters' Laboratories, Incorporated, (UL).

1.3 QUALITY ASSURANCE

A. Manufacturer's Qualifications:
   1. Manufacturer shall have a minimum of five years of experience of producing substantially similar equipment, and shall be able to show evidence of at least five installations in satisfactory operation for at least five years.

B. Regulatory Requirements: Comply with applicable provisions and recommendations of the following, except as otherwise shown or specified.
   1. American National Standards Institute, (ANSI).
   2. Institute of Electrical and Electronic Engineers, (IEEE).
   3. National Electrical Code, (NEC).
   4. National Electrical Manufacturers' Association, (NEMA).
   5. National Fire Protection Association, (NFPA).
   6. Underwriters Laboratories, Incorporated, (UL).
   7. Local and State Building Codes and Ordinances.
   8. Permits: CONTRACTOR shall obtain and pay for all required permits, fees and inspections.

C. Component Supply and Compatibility:
   1. Obtain all equipment included in this Section, regardless of the component manufacturer, from a single hanger and supports manufacturer.
   2. Require the hangers and supports manufacturer to review and approve or to prepare all Shop Drawings and other submittals for all components furnished under this Section.
   3. All components shall be specifically constructed for the specified service conditions and shall be integrated into the overall equipment assembly by the hangers and supports manufacturer.

1.4 SUBMITTALS

A. Action Submittals: Submit the following:
   1. Product Data:
      a. Manufacturer's literature, illustrations, specifications, weight, dimensions, required clearances, materials of construction, and performance data for all equipment.
      b. Load ratings, materials and installation shall be consistent with the recommendations of the MSS SP 58 and MSS SP 69 and Federal Specification WW-H-171, latest edition.
   2. Shop Drawings
      a. Drawings showing fabrication methods, assembly, accessories, installation details.
      b. All hangers, inserts and supports for piping system specified.
      c. Location, installation, material, loads or forces, and deflection of all hangers and supports.

d. Setting drawings, templates, and directions for the installation of anchor bolts and other anchorages.
e. Deviations from Contract Documents.

B. Informational Submittals: Submit the following:
1. Source Quality Control Submittals:
a. Submit factory test reports.
2. Certificates:
a. Submit independent certification reports.

1.5 DELIVERY, STORAGE AND HANDLING

A. Packing, Shipping, Handling and Unloading:
1. Deliver materials to the Site to ensure uninterrupted progress of the Work.

B. Storage of Materials:
1. Store materials to permit easy access for inspection and identification. Keep all material off the ground, using pallets, platforms, or other supports. Protect steel members and packaged materials from corrosion and deterioration.
2. Store all equipment in covered storage off the ground and prevent condensation and in accordance with the manufacturer's recommendations for long-term storage.

C. Acceptance at Site:
1. All boxes, crates and packages shall be inspected by CONTRACTOR upon delivery to the Site. CONTRACTOR shall notify ENGINEER, in writing, if any loss or damage exists to equipment or components. Replace lost equipment or components and repair damage to new condition, in accordance with manufacturer's instructions.

1.6 WARRANTY

A. Completed equipments systems shall carry manufacturer's warranty

PART 2 - PRODUCTS

2.1 DESIGN CRITERIA

A. The manufacturer shall conform to the following criteria:
1. Designs generally accepted as exemplifying good engineering practice, using stock or production parts, shall be utilized wherever possible.
2. Accurate weight balance calculations shall be made to determine the required supporting force at each hanger location and the pipe weight load at each equipment concentration.
3. Pipe hangers shall be capable of supporting the pipe in all conditions of operation. They shall allow free expansion and contraction of the piping,

and prevent excessive stress resulting from transferred weight being induced into the pipe or connected equipment.

4. Hangers shall be designed so that they cannot become disengaged by movements of the supported pipe.

B. Components of hangers and supports shall conform to the following:
   1. Materials:
      a. Bolts: ASTM A 307, Grade A, unless otherwise specified below.
      b. Forgings: ASTM A 668/A 688M.
      c Malleable Iron: ASTM A 47/A 47 M.
      d. Rods and Bars: ASTM A 575.
      e. Threads: Unified Screw Threads, Class 2A and 2B, ANSI B1.1.
      f. Structural Steel: ASTM A 36/A 36M.
   2. Finish:
      a. Steel or malleable iron items, framing members, hangers, rods, bolts, nuts, inserts, washers and appurtenances located in corrosive areas shall be Type 316 stainless steel and those located in non-corrosive areas shall be galvanized steel.
      b. Steel or malleable iron materials used for the support of uninsulated copper piping or plastic piping shall be PVC coated.

C. Pipe Attachments: The following types of pipe attachments shall be considered acceptable:
   1. Adjustable Steel Clevis: FS WW-H-171E, Type 1.
   2. Steel Double Bolt Pipe Clamp: FS WW-H-171E, Type 3.
   3. Steel Pipe Clamp: FS WW-H-171E, Type 4.
   4. Adjustable Swivel Pipe Ring: FS WW-H-171E, Type 6.
   5. Adjustable Steel Band Hanger: FS WW-H-171E, Type 7.
   6. Riser Clamp: FS WW-H-171E, Type 8.
   7. Light-Duty Clevis Hanger: FS WW-H-171E, Type 12.
   8. Long Clips: FS WW-H-171E, Type 26.
   9. Offset J-Hooks: FS WW-H-171E, Type 27.
   10. Steel Pipe Covering Protection Saddle: FS WW-H-171E, Type 40A.
   11. Insulation Protection Shield: FS WW-H-171E, Type 41.
   12. Pipe Saddle Support: FS WW-H-171E, Type 37.
   13. Pipe Stanchion Saddle: FS WW-H-171E, Type 38.
   14. Pipe Saddle Support with Base: FS WW-H-171E, Type 36.
   15. Adjustable Roller Hanger: FS WW-H-171E, Type 42.

D. Structural Attachments: The following types of structural attachments shall be considered acceptable:
   1. Side Beam Clamp: FS WW-H-171E, Type 20.
   2. Center I-Beam Clamp: FS WW-H-171E, Type 21.
   3. Welded Steel Bracket: FS WW-H-171E, Types 32 and 33.
   4. Side Beam Bracket: FS WW-H-171E, Type 35.
   5. Malleable Iron with Galvanized Finish Concrete Insert: FS WW-H-171E, Type 18. Steel inserts are NOT acceptable.

E. Hanger Rod Attachments: Use as required to complete assembly:
   1. Forged Steel Clevis: FS WW-H-171E, Type 14.
   2. Adjustable Turnbuckle: FS WW-H-171E, Type 15.
   3. Forged Steel Welders Eye Nut: FS WW-H-171E, Type 17.\

2.2 SOURCE QUALITY CONTROL

A. Source Quality Control:
   1. Equipment shall be completely manufactured and pre-assembled in accordance with Reference Standards.
   2. Tested and inspected for approval as a unit by Underwriters' Laboratories, Inc., UL Label.
   3. Factory test equipment to ensure that the entire package has been properly fabricated and assembled, that all the controls function as specified herein and that the package meets the specified performance requirements including manufacturer's data report.

PART 3 – EXECUTION

3.1 INSTALLATION

A. General:
   1. Install all items as shown, specified, and as recommended by the manufacturer.
   2. Request instructions from ENGINEER, in writing, when there is a conflict between the manufacturer's recommendations and the Contract Documents.
   3. Present conflicts between equipment and structures to ENGINEER who shall determine corrective measures to be taken.
   4. Do not modify structures to facilitate installation of equipment, unless specifically approved by ENGINEER.
   5. Installation to conform to requirements of all local and state codes.
   6. Insulated pipes with vapor barriers shall have an insulation protection shield conforming to FS WW-H-171E, Type 41 tack-welded to hanger.
   7. Insulated pipes without vapor barriers shall have a steel protection saddle conforming to FS WW-H-171E, Type 40A.
   8. All uninsulated copper piping shall be supported by plastic coated steel pipe attachments.
   9. All piping shall be braced as required, to prevent sway in any direction.

B. Supports and Hangers for Horizontal Pipes:
   1. Space supports and hangers for all piping no farther apart than shown below, unless otherwise shown:
      a. Copper Tube:
         1) All Pipes: 6 feet-0 inch center.
      b. Steel Pipe:
         1) Pipes up to 1-inch: 6 feet-0 inch center.
         2) Pipes 1-1/4-inch to 6-inch: 8 feet-0 inch center.

2. Additional supports shall be placed immediately adjacent to any change in piping direction, and on both sides of valves and couplings.

C. Hanger Rods: Size hanger rods according to the schedule below, unless noted otherwise:

Nominal Pipe (Inches)	Rod Diameter (Inches)
1/2 through 2	3/8
2-1/2 through 3-1/2	1/2
4 through 5	5/8
6	3/4

D. Supports for Vertical Piping:
1. Provide riser clamp placed under hub, fitting or coupling with approved solid bearing on steel sleeve at each floor level.
2. Where riser clamps are used with plastic piping they shall be modified so as not to exert any compressive forces on the pipe.
3. Support spacing shall not exceed code requirements.
4. Piping support intervals shall not exceed those listed in Paragraph 3.2.B., above.
5. Additional supports shall be placed immediately adjacent to any change in piping direction, and on both sides of valves and couplings.

E. Allow clearances for expansion and contraction of piping.

3.2 FIELD QUALITY CONTROL

A. Field Tests:
1. Test all equipment in operation.
2. Check for excessive vibration while all systems are operating.
3. Installed systems and components shall not be released to OWNER unless all systems have been tested and approved by the ENGINEER.

B. Inspection:
1. Examine areas to receive equipment and accessories for:
   a. Defects that adversely affect execution and quality of the Work.
   b. Deviations beyond allowable tolerances.
   c. Start the Work only when conditions are satisfactory.
2. The ENGINEER reserves the right to reject and/or authorize replacement of equipment and accessories found to be defective, blistered, cracked and/or deviated from allowable tolerances.

3.3 ADJUSTING AND CLEANING

A. Adjusting:
1. Adjust all equipment.

B. Cleaning:
   1. Thoroughly clean all equipment and accessories prior to installation.
   2. Remove all dirt, rust, dust, etc. from equipment.
   3. Remove and dispose of all debris and waste from the Site resulting from installation.

+ + END OF SECTION + +

SECTION 23 05 93

TESTING, ADJUSTING, AND BALANCING FOR HVAC

PART 1 – GENERAL

1.1 DESCRIPTION

A. Scope:
   1. CONTRACTOR shall provide all labor, materials, equipment and incidentals as shown, specified, and required to perform the testing, adjusting and balancing for HVAC as specified herein.

B. Coordination:
   1. Review installation procedures under this and other Sections and coordinate the installation of items that must be installed with, or before the testing, adjusting and balancing for HVAC Work.
   2. Notify other contractors in advance of the installation of the testing, adjusting and balancing for HVAC to provide them with sufficient time for the installation of items included in their contracts that must be installed with, or before, the testing, adjusting and balancing for HVAC Work.

1.2 QUALITY ASSURANCE

A. Balancer's Qualifications:
   1. Balancer shall have a minimum of five years of experience of testing, adjusting and balancing substantially similar equipment, and shall be able to show evidence of at least five adjustments in satisfactory operation for at least five years.
   2. Submit biographical information on employee proposed to directly supervise the testing, adjusting and balancing for HVAC Work.
   3. Submit proof of certification by National Environmental Balancing Bureau (NEBB) and/or Association Air Balance Council (AABC).

B. Regulatory Requirements: Comply with applicable provisions and recommendations of the following, except as otherwise shown or specified.
   1. Associated Air Balance Council, (AABC).
   2. Air Moving and Conditioning Association, (AMCA).
   3. American National Standards Institute, (ANSI).
   4. American Refrigeration Institute, (ARI).
   5. Institute of Electrical and Electronic Engineers, (IEEE).
   6. National Electrical Code, (NEC).
   7. National Electrical Manufacturers' Association, (NEMA).
   8. National Environmental Balancing Bureau, (NEBB).
   9. National Fire Protection Association, (NFPA).
   10. Sheet Metal and Air Conditioning Contractors' National Association, (SMACNA).
   11. Underwriters’ Laboratories, Incorporated, (UL).

12. Local and State Building Codes and Ordinances.
13. Permits: CONTRACTOR shall obtain and pay for all required permits, fees and inspections.

1.3 SUBMITTALS

A. Action Submittals: Submit the following:
   1. Shop Drawings:
      a. Submit samples of data sheets on each item of equipment.
      b. Submit data sheets on each item of testing equipment required.
      c. Include name of devices, manufacturer's name, model number, latest date of calibration and correction factors.

B. Informational Submittals: Submit the following:
   1. Site Quality Control Submittals:
      a. Submit specimen copies of report forms for ENGINEER'S review.
      b. Forms shall be 8-1/2 by 11-inch paper for loose-leaf binding, with blanks for listing all required testing ratings and certification of report.
      c. Reports shall be on the organizations approved forms imprinted with the company's name.
      d. Certified report, outlining procedure used to balance the system and the types of measuring devices used.
      e. Submit test results on approved forms in typed format.
      f. Submit a minimum of three certified copies of required test reports to the ENGINEER for review.
   2. Qualifications Statements:
      a. Submit balancer's qualifications

C. Closeout Submittals: Submit the following
   1. Operations and Maintenance Manuals:
      a. Submit complete Installation, Operation and Maintenance Manuals, including, test reports, maintenance data and schedules, description of operation, and spare parts information.
      b. Furnish Operation and Maintenance Manuals in conformance with the requirements of Section 01 78 23, Operations and Maintenance Data.

1.4 OPERATING INSTRUCTIONS

A. Written startup and field test reports must be submitted to ENGINEER and OWNER for approval prior to OWNER'S acceptance for responsibility.

1.5 CORRECTIVE ADJUSTMENTS

A. Should corrective measures caused by faulty installation require re-testing, adjusting and balancing, such Work shall be at no additional cost to the OWNER.

B. Inspections:

1. Inspect all equipment for proper operation prior to testing, adjusting and balancing.

PART 2 – PRODUCTS

2.1 GENERAL

A. CONTRACTOR shall provide all necessary instrumentation, tools, ladders, etc. to complete all air and hydronic balancing tests and adjustments.

B. Instrumentation shall be in accordance with NEBB, AABC, or SMACNA requirements and shall be calibrated to the accuracy standards demanded by these organizations.

C. Flow-measuring hoods (manufactured, not fabricated) shall be acceptable for measurement of ceiling diffuser performance only.

D. CONTRACTOR shall assume full responsibility for safe keeping of all instrumentation during the course of the Work.

2.2 AIR BALANCE INSTRUMENTS

A. Provide all velometers, anemometers, pitot tubes, differential air pressure gages, manometers, hook gages, static pressure probe units, etc. as may be required to perform all air balance tests of HVAC equipment, ducts, registers, grilles, etc.

2.3 SYSTEM PERFORMANCE MEASURING INSTRUMENTS

A. Provide insertion thermometers, sling psychrometers, tachometers, revolution counters, clamp-on volt-ammeter recorders, and other instruments as required to measure all facets of the complete HVAC system performance.

PART 3 – EXECUTION

3.1 GENERAL

A. All testing, adjusting, and balancing of air and hydronic systems shall be performed in compliance with the standard procedure manual published by the testing, adjusting, and balancing organization affiliated with CONTRACTOR. CONTRACTOR shall submit one copy of the standard procedure manual to the ENGINEER for their records.

B. CONTRACTOR shall be solely responsible for the protection and safeguarding of the Work and shall provide every protection against accidents, injury, and damage to persons and property.

C. CONTRACTOR shall keep dust, dirt, and debris to an absolute minimum and reinstall all removed ceiling components to their original positions at the end of each day's Work.

D. CONTRACTOR shall install additional access panels at no extra cost to the OWNER, as is required to gain access to equipment concealed above ceilings, behind walls, or any other concealed space.

E. Air systems shall be tested, adjusted, and balanced with clean filters.

3.2 JOB CONDITIONS

A. Heating, ventilating and air conditioning equipment shall be completely installed and in continuous operation, as required, to accomplish the testing, adjusting and balancing Work specified.

B. Testing, adjusting and balancing shall be performed when outside ambient conditions are approximate to the design conditions for all heating and cooling functions.

C. Test, adjust and balance all air systems, ductwork, etc. and their control systems.

3.3 INSPECTION

A. Pre-Startup Inspection:
   1. Verify proper equipment mounting and setting.
   2. Verify that control, interlock and power wiring is complete.
   3. Verify alignment of motors and drives.
   4. Verify proper piping connections and accessories.
   5. Verify that lubrication is completed.

B. First Run Observations:
   1. Verify direction of rotation.
   2. Verify setting of safety controls.
   3. Monitor heat build-up in bearings.
   4. Check motor loads against nameplate data.

C. Equipment Check:
   1. Verify proper overload heater sizes.
   2. Verify function of safety and operating controls.
   3. Verify proper operation of equipment.
   4. Report on inspection, observation and checking procedures.

3.4 AIR SYSTEMS

A Test, adjust and balance systems in accord with the AABC “National Standards for Field Measurements, Total System Balance, Air Distribution, Hydronics

Systems", Volume One, Number 81266, or SMACNA's "Air Handling" Specification.

B. Preliminary:
   1. Identify and list size, type and manufacturer of all equipment to be tested, including air terminals.

C. Central Systems:
   1. Test rpm for all equipment, including adjusting of each fan, air handling unit, and air conditioning unit to design requirements within the limits of mechanical equipment provided.
   2. Test and record motor voltages and running amperes including motor nameplate data, and starter heater ratings for each unit as listed above.
   3. Make pitot tube traverse of main supply, exhaust and return ducts, determine cfm at all fans and units and adjust fans and units to within five percent of design requirements.
   4. Test and record system static pressure, suction and discharge.
   5. Test and adjust system for design outside air, (cfm).
   6. Test and adjust system for design recirculated air, (cfm).
   7. Test and record heating apparatus entering air temperatures, (dry bulb).
   8. Test and record cooling apparatus entering air temperatures, (dry bulb and wet bulb).
   9. Test and record heating apparatus leaving air temperatures, (dry bulb).
   10. Test and record cooling apparatus leaving air temperatures, (dry bulb and wet bulb).
   11. Record all fan and air handling unit speeds.
   12. Record air quantity delivered by each fan and air-handling unit.

D. Distribution:
   1. Adjust volume dampers, control dampers, splitter dampers, etc., to proper design CFM in main ducts, branch ducts, and zones.

E. Air Terminals:
   1. Identify each air terminal as to location and determine required flow reading.
   2. Test and adjust each air terminal to within tolerance of design requirements as listed below.
      a. Diffusers and Supply Registers: 0 percent to +10 percent.
      b. Return Registers: 0 percent to -10 percent.
      c. Exhaust Registers: 0 percent to -10 percent.
   3. Test procedure on air terminals shall include recording comparison of required cfm and observed cfm, adjustment of terminal, and recording of final cfm.
   4. Adjust flow patterns from air terminal units to minimize drafts to the extent that the design and equipment permits.

F. Verification:

1. Prepare summation of readings of observed cfm for each system, compare with required cfm, and verify that duct losses are within specified allowable range.
2. Verify design cfm at fans as described above.
3. If the air systems are not properly balanced, CONTRACTOR shall rebalance and recheck all data in the presence of the ENGINEER and as accepted by the ENGINEER.

3.5 AUTOMATIC CONTROL SYSTEM

A. In cooperation with the control manufacturer's representative, set and adjust automatically operated devices to achieve required sequence of operations.

B. Testing organization shall verify all controls for proper calibration and list those controls requiring adjustment by control system installer.

3.6 MAINTENANCE AND REPAIR

A. Maintenance and Repair:
   1. Provide all labor, tools and equipment to provide a Preventive Maintenance Program and make repairs for all equipment and controls during the one-year correction period after the Final Acceptance by OWNER. CONTRACTOR shall provide the following services for the same period of one year:
      a. Receive calls for all problems and take steps to immediately correct deficiencies, which may exist.
      b. Provide a monthly inspection of all equipment, and record the findings on a checklist hereinafter specified.
      c. Provide a Preventive Maintenance Schedule for the principle items of equipment.
      d. Respond to OWNER and make repairs for all equipment and controls within 24-hours of notification by OWNER.

B. Check List:
   1. Provide a checklist and post a copy of it, where directed by the OWNER.
   2. Include each piece of equipment specified or shown.
   3. Provide four columns for required quarterly inspections.
   4. Provide columns for the following:
      a. Equipment condition.
      b. Equipment operation.
      c. Equipment lubrication.
      d. Preventive maintenance.
   5. Preventive maintenance shall be performed in accordance with the manufacturer’s recommendations and accepted practice.

3.8 MANUFACTURER'S SERVICES

A. A factory trained representative shall be provided for installation supervision, start-up and test services and operation and maintenance personnel training services. The representative shall make a minimum of 2 visits, minimum 4 hours on-Site for each visit, to the Site. The first visit shall be for assistance in the installation of equipment. Subsequent visit shall be for checking the completed installation, start-up of the system. Manufacturer's representative shall test operate the system in the presence of the ENGINEER and verify that the equipment conforms to the requirements. Representative shall revisit the Site as often as necessary until all trouble is corrected and the installation is entirely satisfactory.

B. All costs, including travel, lodging, meals and incidentals, for additional visits shall be at no additional cost to the OWNER.

+ + END OF SECTION + +

SECTION 23 07 13

DUCT INSULATION

PART 1 - GENERAL

1.1 SUMMARY

A. Scope:
   1. CONTRACTOR shall provide all labor, materials, equipment and incidentals as shown, specified, and required to furnish and install duct insulation complete with accessories.

B. Coordination:
   1. Review installation procedures under other Sections and coordinate the installation of items that must be installed with, or before, duct insulation Work.
   2. Notify other contractors in advance of the installation of duct insulation to provide them with sufficient time for the installation of items included in their contracts that must be installed with, or before, the duct insulation Work.

C. Related Sections:
   1. Section 09 91 00, Painting.

1.2 REFERENCES

A. Standards referenced in this Section are listed below:
   1. American National Standards Institute, (ANSI).
   2. American Society for Testing and Materials, (ASTM).
      a. ASTM E 84, Test Method for Burning Characteristics of Building Materials.
   3. Institute of Electrical and Electronic Engineers, (IEEE).
   4. National Electrical Code, (NEC).
   5. National Electrical Manufacturers' Association, (NEMA).
   6. National Fire Protection Association, (NFPA).
      a. NFPA 90A, Standards for the Installation of Air-Conditioning and Ventilation Systems.
      b. NFPA 255, Method of Test of Surface Burning Characteristics of Building Materials.
   7. Underwriters' Laboratories, Inc., (UL).
      a. UL 723, Test for Burning Characteristics of Building Material.

1.3 QUALITY ASSURANCE

A. Manufacturer's Qualifications:

1. Manufacturer shall have a minimum of five years of experience of producing substantially similar equipment, and shall be able to show evidence of at least five installations in satisfactory operation for at least five years.

B. Installer's Qualifications:
   1. Engage a single installer regularly engaged in ductwork insulation installation and with experience in the installation of the types of materials required; and who agrees to employ only tradesmen with specific skill and experience in this type of Work. Submit name and qualifications to ENGINEER.
   2. Engage a single installer for the entire ductwork insulation system with undivided responsibility for performance and other requirements.

1.4 SUBMITTALS

A. Action Submittals: Submit the following:
   1. Shop Drawings:
      a. Drawings showing fabrication methods, assembly, accessories, installation details and wiring diagrams.
   2. Product Data:
      a. Manufacturer's literature, illustrations, specifications, weight, dimensions, required clearances, materials of construction, and performance data for all equipment.
      b. Other technical data related to specified material and equipment as requested by ENGINEER.

B. Informational Submittals: Submit the following:
   1. Certificates:
      a. Submit independent certification reports.
   2. Supplier Instructions:
      a. Setting drawings, templates, and directions for the installation of anchor bolts and other anchorages.
   3. Source Quality Control Submittals:
      a. Submit factory test reports.
   4. Qualifications Statements:
      a. Installer's qualifications.

1.5 DELIVERY, STORAGE AND HANDLING

A. Packing, Shipping, Handling and Unloading:
   1. Deliver materials to the Site to ensure uninterrupted progress of the Work.

B. Storage and Protection:
   1. Store materials to permit easy access for inspection and identification. Keep all material off the ground, using pallets, platforms, or other supports.

Protect steel members and packaged materials from corrosion and deterioration.

2. Store all equipment in covered storage off the ground and prevent condensation and in accordance with the manufacturer's recommendations for long-term storage.

C. Acceptance at Site:
   1. All boxes, crates and packages shall be inspected by CONTRACTOR upon delivery to the Site. CONTRACTOR shall notify ENGINEER, in writing, if any loss or damage exists to equipment or components. Replace lost equipment or components and repair damage to new condition, in accordance with manufacturer's instructions.

PART 2 – PRODUCTS

2.1 DESIGN CRITERIA

A. Insulation systems including covering, mastics, adhesives, sealers and facings shall have the following Fire Hazard Classifications in accordance with ASTM E 84:
   1. Flame Spread: 25 maximum.
   2. Fuel Contributed: 50 maximum.
   3. Smoke Developed: 50 maximum.

2.2 MANUFACTURERS

A. Manufacturers: Provide products of one of the following:
   1. Owens Corning.
   2. Schuller International, Inc.
   3. Or equal.

2.3 MATERIALS OF CONSTRUCTION

A. Thermal Insulation - Flexible:
   1. Type: Flexible fiberglass blanket with vapor barrier.
   2. Density: Minimum one pound per cubic foot.
   3. Facing: Aluminum foil reinforced with fiberglass yarn mesh and laminated to chemically treated, fire-resistant Kraft paper.
   4. Thickness: 1-1/2-inch minimum, except 2-inch for outside air supply ductwork and plenums located inside building.
   5. Thermal Conductivity: 0.27 Btu-inch/hr ft^2 °F at 75°F mean temperature.

B. Thermal Insulation - Rigid:
   1. Type: Rigid fiberglass board with finished vapor barrier facing.
   2. Density: six pounds per cubic foot.
   3. Facing: Foil reinforced Kraft.

4. Thickness: 1-1/2-inch minimum.
5. Thermal Conductivity: 0.22 Btu-inch/hr. ft^2 °F at 75°F mean temperature.

2.4 DUCTWORK INSULATION JACKETS

A. Aluminum Duct Jacket:
   a. ASTM B209
   b. Thickness: 0.016-inch for all ductwork located outside of the building.``
   c. Finish: Smooth
   d. Joining: Longitudinal slip joints and 2-inch laps.
   e. Fittings: 0.016-inch-thick die shaped fitting covers with factory attached protective liner.
   f. Metal Jacket Bands: 3/8 inch wide.

2.5 SOURCE QUALITY CONTROL

A. Source Quality Control: Equipment shall be completely manufactured and pre-assembled in accordance with Reference Standards. Perform the following tests and inspections at factory before shipment:
   1. Tested and inspected for approval as a unit by Underwriters' Laboratories, Inc., UL Label.
   2. Factory test equipment to ensure that the entire package has been properly fabricated and assembled, that all the controls function as specified herein and that the package meets the specified performance requirements including manufacturer's data report.
   3. Perform the following tests and inspections at factory:
      a. Flame spread.
      b. Smoke developed.
      c. Fuel contributed.

PART 3 - EXECUTION

3.1 INSTALLATION

A. General:
   1. Install all items as shown, specified, and as recommended by the manufacturer.
   2. Request instructions from ENGINEER, in writing, when there is a conflict between the manufacturer's recommendations and the Contract Documents.
   3. Present conflicts between ductwork systems and/or equipment and/or structures to ENGINEER, in writing, who will determine corrective measures to be taken.
   4. Do not modify structures to facilitate installation of ductwork, unless specifically approved by ENGINEER.
   5. Installation to conform to requirements of all local and state codes.

3.2 FIELD QUALITY CONTROL

A. Field Tests:
   1. Fill all systems and fully test all equipment, valves, dampers, etc. in operation.
   2. Check for excessive vibration while all systems are operating.
   3. Installed systems and components will not be released to OWNER unless all systems have been tested and approved by the ENGINEER.
   4. All duct leaks shall be sealed prior to installation of duct insulation.

B. Inspection:
   1. Examine areas to receive insulation and accessories for:
      a. Defects that adversely affect execution and quality of the Work.
      b. Start the Work only when conditions are satisfactory.
   2. The ENGINEER reserves the right to reject and/or authorize replacement of ductwork insulation and accessories found to be defective, blistered, cracked and/or deviated from allowable tolerances as described above.

3.3 ADJUSTING AND CLEANING

A. Adjusting:
   1. Adjust all controls for proper settings.
   2. While system is operable, balance all equipment, valves, dampers, etc. to achieve design conditions.

B. Cleaning:
   1. Thoroughly clean all exterior surfaces of ductwork and accessories prior to installation.
   2. Remove all dirt, rust, dust, etc. from ductwork in preparation for painting.
   3. Remove and dispose of all debris and waste from the Site resulting from installation.

3.4 MATERIAL SCHEDULES

A. Thermal Insulation - Rigid: The following exposed ductwork exposed in room shall be insulated, as shown:
   1. All outside air intake ducts and plenums from the outside air intake louver, outside air intake shaft, or roof mounted intake up to the point where the duct or plenum is connected to the heating and ventilating units, air-conditioning units, or supply fans in heated and air-conditioned spaces.
   2. All exhaust and return air ductwork from air-conditioned spaces.
   3. All supply and return air ductwork associated with air-conditioning units (except those located within conditioned spaces).
   4. All heated and air-conditioned ductwork located in unheated spaces.

5. All heated and air-conditioned ductwork located outdoor shall be insulated and covered with weatherproof aluminum jacket.

B. Thermal Insulation - Flexible: The following ductwork located above hung ceiling shall be insulated, as shown:
   1. All supply, exhaust and return ductwork associated with air-conditioning units.
   2. All outside air intake ducts and plenums from the outside air intake louver, outside air intake shaft or roof mounted intake up to the point where the duct or plenum is connected to the heating and ventilating units and supply fans.

C. Insulation Thickness: All ductwork insulation shall be 1-1/2-inch thick, except for outside air intake plenum and outside air ductwork insulation that shall be 2-inches thick.

+ + END OF SECTION + +

SECTION 23 31 13

METAL DUCTWORK

PART 1 - GENERAL

1.1 DESCRIPTION

A. Scope:
   1. CONTRACTOR shall provide all labor, materials, equipment and incidentals as shown, specified, and required to furnish and install metal ductwork complete with accessories.

B. Coordination:
   1. Review installation procedures under this and other Sections and coordinate the installation of items that must be installed with, or before, metal ductwork and accessories Work.
   2. Notify other contractors in advance of the installation of metal ductwork and accessories to provide them with sufficient time for the installation of items included in their contracts that must be installed with, or before, the metal ductwork and accessories Work.

C. Related Sections:
   1. Section 23 09 00, Instrumentation and Control for HVAC.

1.2 REFERENCES

A. Standards referenced in this Section are listed below:
   1. American Conference of Governmental Industrial Hygienists, (ACGIH).
      a. ACGIH 0428, Industrial Ventilation Workbook.
      b. ACGIH 0440, Design of Industrial Ventilation Systems.
      c. ACGIH 9222, Industrial Ventilation Principals.
   2. American National Standards Institute, (ANSI).
   3. American Society of Heating, Refrigeration, and Air Conditioning Engineers, (ASHRAE).
   4. American Society for Testing and Materials, (ASTM).
      a. ASTM A 774/A 774M, Specifications for As-Welded Wrought Austenitic Stainless Steel Fittings For General Corrosive Service At Low And Moderate Temperature.
      b. ASTM A 778, Specification for Welded, Unconnected Austenitic Stainless Steel Tubular Products.
   5. Institute of Electrical and Electronic Engineers, (IEEE).
   6. National Fire Protection Association, (NFPA).
      a. NFPA 90A, Standard for the Installation of Air-Conditioning and Ventilating Systems.
   7. National Electrical Code, (NEC).

8. National Electrical Manufacturers Associates, (NEMA).
9. Sheet Metal and Air Conditioning Contractors National Associations, (SMACNA).
    a. SMACNA 1481, HVAC Duct Construction Standards Metal and Flexible.
    b. SMACNA 1520, RIDCS-Round Industrial Duct Construction Standards.
    c. SMACNA 1299, Rectangular Industrial Duct Construction Standards.
    d. SMACNA 1819, Fire, Smoke and Radiation Damper Installation Guide for HVAC Systems.
10. Underwriters' Laboratories, Inc., (UL).
    a. UL 181, Factory-Made Air Ducts and Air Connectors.
    b. UL 555, Fire Dampers.

1.3 QUALITY ASSURANCE

A. Installer's Qualifications:
    1. Engage a single installer regularly engaged in metal ductwork installation and with experience in the installation of the types of materials required; and who agrees to employ only tradesmen with specific skill and experience in this type of Work. Submit name and qualifications to ENGINEER.
    2. Engage a single installer for the entire metal ductwork system with undivided responsibility for performance and other requirements.

B. Regulatory Requirements: Comply with applicable provisions and recommendations of the following, except as otherwise shown or specified.
    1. American National Standards Institute, (ANSI).
    2 Institute of Electrical and Electronic Engineers, (IEEE).
    3. National Electrical Code, (NEC).
    4. National Electrical Manufacturers' Association, (NEMA).
    5. National Fire Protection Association, (NFPA).
    6. Underwriters' Laboratories, Inc., (UL).
    7. Local and State Building Codes and Ordinances.
    8. Permits: CONTRACTOR shall obtain and pay for all required permits, fees and inspections.

1.4 SUBMITTALS

A. Action Submittals: Submit the following:
    1. Shop Drawings:
        a. 1/4-inch scale layouts, dimensioned to show length of runs, sizes, support spacing and expansion provisions.
        b. Details of installation, including supports.
        c. Submit schedule with materials of construction, sizes, thickness, design pressure, weight per foot, maximum span, joint type and flange data.

d. Submit air outlet schedule indicating size, location, model, duty (supply, exhaust, or return) and quantity.

2. Product Data:
   a. Manufacturer's literature, illustrations, specifications and engineering data for all equipment.
   b. Other technical data related to specified material and equipment as requested by ENGINEER.
   c. Detailed description of each component.
   d. Gasket material
   e. Flexible connections

B. Informational Submittals: Submit the following:
   1. Certificates:
      a. CONTRACTOR shall provide certification that all stainless steel ductwork, accessories and hardware are Type 316 stainless steel.
   2. Supplier Instructions:
      a. Setting drawings, templates, and directions for the installation of anchor bolts and other anchorages.
   3. Source Quality Control Submittals:
      a. Submit factory test reports.
   4. Qualifications Statements:
      a. Installer's qualifications.

C. Closeout Submittals: Submit the following
   1. Record Documentation:
      a. During progress of the Work keep an up-to-date set of the Drawings showing field and Shop Drawing modifications. Immediately upon completion of work submit CADD drawings showing the actual in-place installation of all ductwork and equipment installed under this Section at a scale satisfactory to the OWNER. The drawings shall show all metal ductwork on plans and in sections, with all reference dimensions and elevations required for complete Record Drawings of the systems. Two paper prints shall also be furnished. The prints and electronic copies of the CADD files shall be furnished no later than 30 days after completion of the Contract and prior to final payment.

1.5 DELIVERY, STORAGE AND HANDLING

A. Shipping, Packaging, Handling and Unloading:
   1. Deliver materials to the Site to ensure uninterrupted progress of the Work.

B. Storage and Protection:
   1. Store materials to permit easy access for inspection and identification. Keep all material off the ground, using pallets, platforms, or other supports. Protect steel members and packaged materials from corrosion and deterioration.

2. Store all equipment in covered storage off the ground and prevent condensation and in accordance with the manufacturer's recommendations for long-term storage.

C. Acceptance of Site:
1. All boxes, crates and packages shall be inspected by CONTRACTOR upon delivery to the Site. CONTRACTOR shall notify ENGINEER, in writing, if any loss or damage exists to equipment or components. Replace lost equipment or components and repair damage to new condition, in accordance with manufacturer's instructions.

1.6 JOB CONDITIONS

A. Protection: Properly plug or cap the open ends of all metal ductwork at the end of each day's Work or other stopping point throughout the construction. Equipment shall be tightly covered and protected against dirt, water, and chemical or mechanical damage.

1.7 GENERAL REQUIREMENTS

A. The Contract Documents show the general arrangement and extent of the Work to be done. The exact location and arrangement of all parts shall be determined as the Work progresses. The exact location of all parts of the Work is governed by the general building plans and the actual building conditions.

B. The Drawings are intended as an indication of the arrangement of equipment and metal ductwork and is as nearly correct as can be determined in advance of the actual construction of the Work. Equipment, ductwork, and appurtenances found to interfere with the construction of the building, plumbing apparatus and piping, electrical wiring or other obstructions, etc., shall be changed in location to clear obstructions.

C. The connections shown to the various units are particularly intended as an indication only. The actual connections at the time of installation is to be made and arranged as to suit the requirements of each particular case, and to adequately provide for expansion and minimize the amount of space required for the same.

D. The Drawings show the general arrangement of all systems. Should conditions necessitate rearrangement of one or more of the systems, CONTRACTOR, before proceeding with the Work, shall prepare and submit complete drawings showing all details of the proposed rearrangement for written approval.

E. The Drawings do not indicate, all offsets, fittings, accessories and details, which may be required. CONTRACTOR shall examine all of the General Construction, Electrical, Mechanical, Structural and other Drawings and the respective Specifications for conditions which may affect the installation of the Work, and

shall arrange the Work accordingly, furnishing all required items to meet such conditions which are not specified as work "by others", to complete the systems to the true extent of the Contract Documents.

PART 2 - PRODUCTS

2.1 METALLIC RECTANGULAR DUCTWORK

A. Type:
   1. Galvanized steel (G90 coating).
      a. All accessories, hardware, and fasteners for galvanized ductwork, shall be galvanized steel, unless otherwise noted.

B. Construction: Conform to the latest edition of SMACNA (Sheet Metal and Air Conditioning Contractor's National Association, Inc.) Standards.
   1. All sheet metal construction shall conform to a minimum pressure classification of 2-inches of water gage (positive and negative pressure), unless otherwise shown or specified, and shall be in accordance with the construction details and installation details in the latest edition of the SMACNA HVAC Duct Construction Standards. This Standard is hereinafter referred to as HVAC DS.
   2. Duct construction alternatives (duct gauge in relation to reinforcement spacing) selected by CONTRACTOR from HVAC DS Tables shall be identified by duct system and shall be submitted in schedule form to the ENGINEER prior to beginning installation of metal ductwork. CONTRACTOR shall construct metal ductwork to meet the requirements of the HVAC DS Tables in conjunction with the minimum thickness schedule below.
   3. Longitudinal seams shall be Pittsburgh type with permanently elasticmatic sealant applied continuously within the seam.
   4. Galvanized Steel Minimum Thicknesses:

Duct Dimension, (maximum side):	Thickness:
Under 12-inches	0.028-inches (No. 24 B&S Gage)
Between 12 and 30-inches	0.034-inches (No. 22 B&S Gage)
Between 31 and 36-inches	0.040-inches (No. 20 B&S Gage)
Between 37 and 48-inches	0.052-inches (No. 18 B&S Gage)
Above 48-inches	0.064-inches (No. 16 B&S Gage)

   5. Ductwork shall be connected by a mechanical joining system manufactured by Ductmate Industries, Inc., or equal, except where otherwise noted. Manufacturers' installation instructions will be followed, except where otherwise noted. SMACNA T-24 flange type connectors formed from the duct edge will NOT be allowed. All connectors shall meet or exceed the functional criteria outlined in SMACNA and shall be constructed of the same material as the ductwork.

6. Stiffener angles shall be constructed of the same material as the ductwork.
7. Turning Vanes:
    a. Reference: SMACNA Standards.
    b. Construction: Same material as ductwork.
    c. Vanes: Single thickness.
8. Transitions and Offsets:
    a. Reference: SMACNA Standards.
    b. Material: Same material as ductwork.
9. Branch Take-Offs:
    a. Reference: SMACNA Standards.
    b. Material: Same material as ductwork.
    c. 45 degrees, NO straight taps, unless specifically shown.
10. Elbows:
    a. Reference: SMACNA Standards.
    b. Material: Same material as ductwork.
    c. Elbows shall be the radius type with R=1.5, unless specifically shown otherwise.
    d. Where space limitations prevent the use of a radius elbow provide a square throat elbow with turning vanes.

C. Seal Class:
1. Class A – All duct systems.

D. Leakage:
1. Zero percent - for ductwork served by all systems.

2.2 METALLIC ROUND DUCTWORK

A. Type:
1. Galvanized steel (G90 coating).
    a. All accessories, hardware, and fasteners for galvanized ductwork, shall be galvanized steel, unless otherwise noted.

B. General: Conform to the latest edition of SMACNA (Sheet Metal and Air Conditioning Contractor's National Association, Inc.) Standards.
1. All sheet metal construction shall conform to a minimum pressure classification of 2-inches of water gage (positive and negative pressure), unless otherwise shown or specified, and shall be in accordance with the construction details and installation details in the latest edition of the SMACNA HVAC Duct Construction Standards. This Standard is hereinafter referred to as HVAC DS.
2. Duct construction alternatives (duct gauge in relation to reinforcement spacing) selected by CONTRACTOR from HVAC DS Tables shall be identified by duct system and shall be submitted in schedule form to the ENGINEER prior to beginning installation of metal ductwork. CONTRACTOR shall construct metal ductwork to meet the requirements of

the HVAC DS Tables in conjunction with the minimum thickness schedule below.

3. Metal ductwork shall be manufactured by United McGill Corporation Series UNI-SEAL or equal.
4. Metal ductwork fittings shall be manufactured by United McGill Corporation, Series LOLOSS or equal.
5. Round, single wall, spiral lock seam metal ductwork.
6. Galvanized Steel Ductwork Minimum Thicknesses:

Duct Diameter:	Minimum Thickness:
Under 13-inches:	26 Gauge.
14 thru 19-inches:	24 Gauge.
20 thru 24-inches:	22 Gauge.
25 thru 36-inches:	20 Gauge.
37 thru 48-inches:	18 Gauge.

7. Ductwork shall be provided in continuous unjoined lengths wherever possible, except when interrupted by fittings and dampers.
8. Fittings: Elbows shall be die-stamped with a bend radius of 1.5 times the elbow diameter. Converging flow fittings shall be constructed with a radiused entrance to all branch taps and with no excess material projecting from the body into the branch tap entrance. Conform to the following requirements:
   a. All branch entrances shall be by means of factory-fabricated fittings or factory fabricated duct tap assemblies.
9. Connections: Ductwork and fittings shall be connected using flanged joints in accordance with the manufacturer's installation procedures and duct sealant recommendations for intended service conditions.

C. Seal Class: A.

D. Leakage: 0 percent.

2.3 METALLIC DUCT ACCESSORIES

A. Hangers:
   1. All metal ductwork shall be supported from trapeze type hangers. Hanger rods shall be minimum 3/8-inch for all ducts with half perimeter up to 72-inches, and 1/2-inch diameter for all ducts with half perimeter larger than 72-inches. A pair of rods shall be provided at each duct support point. Maximum hanger spacing shall be eight feet for ducts with half perimeter up to 72-inches and six feet for ducts with half perimeter larger than 72-inches.
   2. Provide structural steel supports as required to mount hangers from building structure.
   3. All hangers, rods, supports, bolts, nuts, washers, inserts, supports, and appurtenances located in non-corrosive areas shall be galvanized steel.

4. Hanger construction and installation shall conform to SMACNA Standards, except as specified. No sheet metal duct hangers or straps will be allowed.

B. Volume Dampers (Rectangular Ductwork):
   1. Galvanized Steel Ductwork:
      a. Manufacturers: Provide products of one of the following:
         1) Swartwout, Phillips Industries, Model 802.
         2) Ruskin.
         3) Or equal.
      b. Reference: AMCA licensed.
      c. Material: Galvanized steel.
      d. Frame: 14-gauge flanged frame.
      e. Blades: Opposed blades.
      f. Linkage: Concealed in frame outside the air stream.
      g. Axles: Galvanized steel.
      h. Bearings: Stainless steel sleeve.
      i. Seals:
         1) Jamb: Flexible Type 316 stainless steel compressible type.
      j. Performance:
         1) Damper Leakage: Not more than 32 cfm per square foot at 2.5-inch W.G. for 48-inch by 48-inch section.
         2) Certification: Manufacturer shall provide certified test data.
      k. Provide outside handle, quadrant and approved position indicator with locking device.

C. Volume Dampers (Round Ductwork):
   1. Products and Manufacturers: Provide one of the following:
      a. Swartwout, Phillips Industries, Model 902.
      b. Or equal.
   2. Reference: AMCA licensed.
   3. Material: Same as ductwork.
   4. Frame:
      a. 0.141-inch thick flanged frame up to 12-inch round damper.
      b. 0.250-inch thick flanged frame over 12-inch round damper.
   5. Blades:
      a. 0.250-inch thick opposed blades.
      b. Teflon blade seals.
   6. Axles:
      a. 0.75-inch diameter up to 24-inch round damper.
      b. One-inch diameter over 24-inch round damper.
   7. Bearings:
      a. Relubricatable ball bearings bolted to frame.
   8. Performance:
      a. Damper Leakage: Not more than 28 cfm at 14-inches maximum system pressure.
      b. System Pressure: 13-inches w.g.

c. Certification: Manufacturer shall provide certified test data.

9. Provide outside handle, quadrant and approved position indicator with locking device.

D. Access Doors:
1. Rectangular Ductwork:
   a. Reference: SMACNA Standards.
   b. Type: Gasketed cam lock covers.
   c. Materials: Same as duct.
   d. Unless otherwise specified access doors shall be:
      1) 12 by X-2-inches for ducts X-inches and smaller less then 14-inches.
      2) 24 by 12-inches for ducts between 14 and 36-inches.
      3) 24 by 24-inches for ducts between 36 and 60-inches.
      4) (Two) 24 by 24-inch doors for ducts larger than 61-inches.
   e. Provide access doors for all smoke detectors and other duct mounted devices where required to be accessible.
2. Round Ductwork:
   a. Reference: SMACNA Standards.
   b. Type: Industrial oval access door with locking hand wheels.
   c. Materials: Same as duct.
   d. Oval access door sizes:

Duct Diameter:	Nominal Opening:
8 thru 18-inches:	10 by 6-inches.
19 thru 48-inches:	16 by 12-inches.
49 thru 72-inches:	24 by 18-inches.

F. Flexible Connections:
1. Reference: SMACNA Standards.
2. Fabric:
   a. 1/16-inch thick minimum reinforced Hypalon or EPDM sheeting.
   b. UV resistant for outdoor use.

G. Miscellaneous Duct Fittings:
1. Reference: SMACNA Standards.
2. Material: Same material as ductwork.

H. Sleeves:
1. Where galvanized steel ductwork passes through masonry walls, partitions or floors, provide 16-gauge galvanized sleeve.
2. Where two types of metallic ductwork come together at a sleeve, provide Type 316 stainless steel sleeve.
3. Calk airtight with fire resistant sealant between sleeve and ductwork.

I. Duct Gasketing: Gasketing material shall be butyl.

J. Hardware and Fasteners:
   1. All hardware and fasteners for galvanized ductwork shall be galvanized steel.
   2. All hardware and fasteners for aluminum ductwork shall be Type 316 stainless steel.
   3. All hardware and fasteners for stainless steel ductwork shall be Type 316 stainless steel.

2.4 REGISTERS AND DIFFUSERS

A. Manufacturers: Provide products of one of the following:
   1. Tuttle & Bailey.
   2. AJ Manufacturing Co.
   3. Anemostat.
   4. Titus.
   5. Or equal.

B. General:
   1. Galvanized registers.

C. Supply Registers - SA:
   1. 3/4” blade spacing, front blades parallel to long dimension.
   2. Single deflection.
   3. Galvanized: Titus, Series 301RL.
   4. Equivalent equal.

D. Return Registers - RA:
   1. 3/4” blade spacing, front blades parallel to long dimension.
   2. Zero degree deflection.
   3. Galvanized: Titus, Series 350ZRL.

PART 3 - EXECUTION

3.1 INSTALLATION

A. General:
   1. Install all items as shown, specified, and as recommended by the manufacturer.
   2. Request instructions from ENGINEER, in writing, when there is a conflict between the manufacturer's recommendations and the Contract Documents.
   3. Present conflicts between metal ductwork systems and/or equipment and/or structures to ENGINEER, in writing, who shall determine corrective measures to be taken.

4. Do not modify structures to facilitate installation of metal ductwork, unless specifically approved by ENGINEER.
5. Installation to conform to the requirements of all local and state codes.

B. All metal ductwork shall conform accurately to the dimensions shown, the ducts shall be straight and smooth inside with joints neatly finished. Metal ductwork shall be installed so as to preclude the possibility of vibration under all operating conditions.

C. Tape and seal all joints in accordance with SMACNA Standards.

D. Test holes shall be provided as directed by the testing, adjusting and balancing contractor.

E. Fire/Smoke dampers shall be provided and installed where indicated and where required by UL and authorities having jurisdiction, and shall be approved by local building codes and in accordance with the requirements of the NFPA.

F. Install all metal ductwork and accessories to provide a system free from buckling, warping, breathing or vibration.

G. All ducts at flexible connections with fans shall be supported at free end within 12-inches of flexible connection.

H. Provisions shall be made for supporting all metal ductwork, dampers, and other ductwork accessories, where necessary.

I. Coordinate all air outlets for compatibility with ceiling system.

3.2 FIELD QUALITY CONTROL

A. Field Tests:
1. Test all equipment in operation.
2. Check for excessive vibration while all systems are operating.
3. Installed systems and components shall not be released to OWNER unless all systems have been tested and approved by the ENGINEER.

B. Inspection:
1. Examine areas to receive metal ductwork and accessories for:
   a. Defects that adversely affect execution and quality of the Work.
   b. Deviations beyond allowable tolerances
   c. Start the Work only when conditions are satisfactory.
2. The ENGINEER reserves the right to reject and/or authorize replacement of metal ductwork and accessories found to be defective, blistered, cracked and/or deviated from allowable tolerances.

3.3 ADJUSTING AND CLEANING

A. Adjusting:
   1. Adjust all controls for proper settings.
   2. While system is operable, balance all equipment, valves to achieve design conditions.

B. Cleaning:
   1. Thoroughly clean metal ductwork and accessories prior to installation.
   2. Remove all dirt, rust, dust, etc. from metal ductwork in preparation for insulation.
   3. Remove and dispose of all debris and waste from the Site resulting from installation.

3.4 MATERIAL SCHEDULES

A. All metal ductwork shall be galvanized steel.

B. Metal ductwork materials not specified above or as shown shall be constructed of Type 316 stainless steel, unless otherwise directed by ENGINEER:

+ + END OF SECTION + +

SECTION 23 81 26

DUCTLESS SPLIT SYSTEM AIR CONDITIONERS

PART 1 - GENERAL

1.1 DESCRIPTION

A. Scope:
   1. CONTRACTOR shall provide all labor, materials, equipment and incidentals as shown, specified, and required to furnish and install ductless split system air conditioning/heat pump units complete and operational with accessories, including mounting hardware and thermostats for proper operation.

B. Coordination:
   1. Review installation procedures under this and other Sections and coordinate the installation of items that must be installed with, or before, the ductless split system air conditioners Work.
   2. Notify other contractors in advance of the installation of the ductless split system air conditioners to provide them with sufficient time for the installation of items included in their contracts that must be installed with, or before, the ductless split system air conditioners Work.

C. Related Sections:
   2. Section 23 05 29, Hangers and Supports for HVAC Piping and Equipment.

1.2 REFERENCES

A. Standards referenced in this Section are listed below:
   1. Air Conditioning and Refrigeration Institute, (ARI).
      a. ARI 410, Forced-Circulation Air Cooling Air-Heating Coils.
      b. ARI 430, Standard for Central Station Air-Handling Units.
   2. Air Moving and Conditioning Association, (AMCA).
   3. American Society of Heating, Refrigeration, Air Conditioning Association, (ASHRAE).

1.3 QUALITY ASSURANCE

A. Manufacturer's Qualifications:
   1. Manufacturer shall have a minimum of five years experience producing substantially similar equipment, and shall be able to show evidence of at least five installations in satisfactory operation for at least five years.

B. Component Supply and Compatibility:
   1. Obtain all equipment included in this Section, regardless of the component manufacturer, from a single ductless split system air conditioner manufacturer.

2. The ductless split system air conditioner’s equipment manufacturer to review and approve or prepare all Shop Drawings and other submittals for all components furnished under this Section.
3. All components shall be specifically constructed for the specified service conditions and shall be integrated into the overall assembly by the ductless split system air conditioning unit's equipment manufacturer.

C. Regulatory Requirements: Comply with applicable provisions and recommendations of the following, except as otherwise shown or specified.
1. American National Standards Institute, (ANSI).
2. Institute of Electrical and Electronic Engineers, (IEEE).
3. National Electrical Code, (NEC).
4. National Electrical Manufacturers' Association, (NEMA).
5. National Fire Protection Association, (NFPA).
6. Underwriters’ Laboratories, Incorporated, (UL).
7. Local and State Building Codes and Ordinances.
8. Permits: CONTRACTOR shall obtain and pay for all required permits, fees and inspections.

1.4 SUBMITTALS

A. Action Submittals: Submit the following:
1. Shop Drawings:
a. Drawings showing fabrication methods, assembly, accessories, installation details and wiring diagrams.
b. Complete equipment list.
c. Detailed drawings of each individual component’s wiring diagrams.
d. Detailed installation drawing of each individual component showing:
1) Mounting requirements.
2) Locations (panel, field, etc).
3) Piping and wiring connections, labeled and coded.
4) Instructions.
5) Materials of construction.
6) Data sheets.
2. Product Data:
a. Manufacturer's literature, illustrations, specifications, weight, dimensions, required clearances, materials of construction, and performance data for all equipment.
b. Other technical data related to specified material and equipment as requested by ENGINEER.
c. Detailed description of each component.
d. Catalog cut sheets.

B. Informational Submittals: Submit the following:
1. Certificates:
a. Submit independent certification reports
2. Supplier Instructions:

a. Setting drawings, templates, and directions for the installation of anchor bolts and other anchorages.

3. Source Quality Control Submittals:
   a. Submit factory test reports.

C. Closeout Submittals: Submit the following
   1. Operations and Maintenance Manuals:
      a. Submit complete Installation, Operation and Maintenance Manuals, including, test reports, maintenance data and schedules, description of operation, and spare parts information.
      b. Furnish Operation and Maintenance Manuals in conformance with the requirements of Section 01 78 23, Operations and Maintenance Data.

D. Maintenance Material Submittals: Furnish the following:
   1. Spare Parts:
      a. Spare parts list and recommended quantities.

1.5 DELIVERY, STORAGE AND HANDLING

A. Packing, Shipping, Handling and Unloading:
   1. Deliver materials to the Site to ensure uninterrupted progress of the Work. Deliver anchor bolts and anchorage devices, which are to be embedded in cast-in-place concrete, in ample time to prevent delay of the Work.

B. Storage and Protection:
   1. Store materials to permit easy access for inspection and identification. Keep all material off the ground, using pallets, platforms, or other supports. Protect steel members and packaged materials from corrosion and deterioration.
   2. Store all equipment in covered storage off the ground and prevent condensation and in accordance with the manufacturer's recommendations for long-term storage.

C. Acceptance at Site:
   1. All boxes, crates and packages shall be inspected by CONTRACTOR upon delivery to the Site. CONTRACTOR shall notify ENGINEER, in writing, if any loss or damage exists to equipment or components. Replace lost equipment or components and repair damage to new condition, in accordance with manufacturer's instructions.

PART 2 – PRODUCTS

2.1 DESIGN CONDITIONS

A. Minimum performance data for each unit shall be as shown on the Equipment Schedules. Provided equipment shall not exceed scheduled horsepower, outlet air velocity, and air or water pressure drops.

2.2 MANUFACTURERS

A. Products and Manufacturers: Provide one of the following:
   1. Carrier, Model RAS-EKV (indoor units).
   2. Carrier, Model RAS-EAV (outdoor units).
   3. Or equal.

2.3 DETAILS OF CONSTRUCTION

A. Ductless Split System, in Recessed Ceiling Mounted:
   1. Unit Type: Ductless split system air conditioning unit with remotely located air-cooled condensing unit.
   2. Indoor Unit:
      a. General: The indoor unit shall be of fully exposed and architecturally pleasing, wall mount type, factory assembled and wired complete with fan, motor, direct expansion cooling coil, condensate drain, filter, and control panel.
      b. Cabinet: The cabinet shall be galvanized steel with structural stiffeners, finished inside and out with baked enamel paint and insulated with 1/4-inch fire-proof fiberglass material.
      c. Discharge Grille: Four-way adjustable airfoil louvers.
      d. Condensate Drain Pan: Galvanized steel with anti-corrosion coating.
      e. Color: Matte finished, Designer White.
      f. Fan: Centrifugal type, directly mounted to motor shaft and dynamically balanced.
      g. Fan Motor: PSC type with thermal overload protection and dual voltage speed taps to maintain proper air flow at varying voltages.
      h. Filter: Permanent and washable aluminum mesh.
      i. Coil: Seamless copper tubing, arranged in staggered configuration, with enhanced aluminum fins, tested to 460 psig. The tubes are mechanically expanded to secure bonding to fin shoulder.
      j. Refrigerant Circuit: Unit is equipped with an indoor piston type expansion device.
      k. Controls/Components: Unit mounted operating controls include fan speed control, relays and connections for condensing unit.
   3. Remote Air Cooled Condensing Unit (Outdoor Unit):
      a. Cabinet: Fabricated of galvanized steel finished with corrosion inhibiting, high gloss, powder coated paint.
      b. Fan guard: Heavy-gauge vinyl dipped wire.
      c. Colors: Beige cabinet, black fan guard, black coil.
      d. Compressor: One per zone, hermetically sealed, high-efficiency reciprocating type installed on resilient mountings. Direct drive PSC motor with internal overload protection.
      e. Condenser coil: Seamless copper tubing, arranged in staggered configuration, with enhanced aluminum fins, tested to 460 psig. The tubes are mechanically expanded to secure bonding to fin shoulder.

f. Condenser fan: Draw-thru, large diameter, high efficiency, three blade propeller type. Direct drive totally enclosed PSC motor with internal overload protection.
g. Refrigerant Circuits: Precharged refrigerant for the condenser coils and evaporators. Unit refrigeration valves are Primore, solid brass, for sweat connection.
h. Controls/Components: Controls shall be installed at the factory; include compressor and fan motor contactors, capacitor, low voltage trans-former, low voltage terminals for interconnection with evaporator, high-pressure control, hot gas bypass and low ambient control.
i. Refrigerant Pumping: Refrigerant runs to indoor unit with 66 feet of interconnected piping.

4. Factory Mounted Controls Include:
   a. Thermostat.
   b. Fan speed control.
   c. Digital setpoint display.
   d. Relays for condensing unit.
   e. Drain pan high level alarms.
   f. Factory fault alarms.

2.4 HANGERS AND SUPPORTS

A. CONTRACTOR shall provide all structural steel supports, hanger rods, attachments, fasteners and appurtenances, as required to support units from building structure conforming to the requirements of Section 23 05 29, Hangers and Supports for HVAC Piping and Equipment.

2.5 SPARE PARTS

A. Spare parts:
   1. Provide one spare set of replacement filters for each unit.
   2. Provide one can of touch-up paint.

B. Spare parts shall be packed in sturdy containers with clear indelible identification markings and shall be stored in a dry, warm location until transferred to the OWNER at the conclusion of the Project

2.6 SOURCE QUALITY CONTROL

A. Equipment shall be completely manufactured and pre-assembled in accordance with Reference Standards. Perform the following tests and inspections at factory before shipment:
   1. Tested and inspected for approval as a unit by Underwriter's Laboratories, Inc., UL Label.
   2. Tested and inspected for approval as a unit by Air conditioning and Refrigeration Institute, ARI label.
   3. Fans: Air Conditioning and Refrigeration Institute ARI 430.

4. Coils shall be certified under ARI 410.
5. Factory test equipment to ensure that the entire package has been properly fabricated and assembled, that all the controls function as specified herein and that the equipment meets the specified performance requirements including manufacturer's data report.

PART 3 – EXECUTION

3.1 INSTALLATION

A. General:
1. Install all items as shown, specified, and as recommended by the manufacturer.
2. Request instructions from ENGINEER, in writing, when there is a conflict between the manufacturer's recommendations and the Contract Documents.
3. Present conflicts between piping systems or equipment or structures to ENGINEER, in writing, who will determine corrective measures to be taken.
4. Do not modify structures to facilitate installation of piping or equipment, unless specifically approved by ENGINEER.
5. Installation to conform to requirements of all local and state codes.
6. Protection: Properly plug or cap the open ends of all piping at the end of each day's Work or other stopping point through construction. Equipment shall be tightly covered and protected against dirt, water, and chemical or mechanical damage.

3.2 FIELD QUALITY CONTROL

A. Field Tests:
1. Fill all systems and fully test all equipment, valves, dampers, etc. in operation.
2. Check for excessive vibration while all systems are operating.
3. Installed systems and components will not be released to OWNER unless all systems have been tested and approved by the ENGINEER.

B. Inspection:
1. Examine areas to receive equipment, piping, valves and accessories for:
   a. Defects that adversely affect execution and quality of the Work.
   b. Deviations beyond allowable tolerances for equipment, piping, valves and accessories.
   c. Start the Work only when conditions are satisfactory.
2. The ENGINEER reserves the right to reject and/or authorize replacement of equipment, piping and accessories found to defective, blistered, cracked and/or deviated from allowable tolerances as described above.

3.3 ADJUSTING AND CLEANING

A. Adjusting:
   1. Adjust all controls for proper settings.
   2. While system is operable, balance all equipment, valves, dampers, etc. to achieve design conditions.

B. Cleaning:
   1. Thoroughly clean all piping, fittings, valves, equipment and accessories prior to installation.
   2. Remove all dirt, rust, dust, etc. from piping, equipment and accessories in preparation for painting.
   3. Remove and dispose of all debris and waste from the Site resulting from installation.

3.4 MANUFACTURER'S SERVICES

A. A factory trained representative shall be provided for installation supervision, start-up and test services and operation and maintenance personnel training services. The representative shall make a minimum of 2 visits, minimum 4 hours on-Site for each visit, to the Site. The first visit shall be for assistance in the installation of equipment. Subsequent visits shall be for checking the completed installation, start-up and training of the system. Manufacturer's representative shall test operate the system in the presence of the ENGINEER and verify that the equipment conforms to the requirements. Representative shall revisit the Site as often as necessary until all trouble is corrected and the installation is entirely satisfactory.

B. All costs, including travel, lodging, meals and incidentals, for additional visits shall be at no additional cost to the OWNER.

+ + END OF SECTION + +

APPENDIX I

Structural Specifications

SECTION 03300

CONCRETE

PART 1 GENERAL

1.1 DESCRIPTION

A. Scope
   1. CONTRACTOR shall provide all labor, materials, equipment, and incidentals as shown, specified, and required to furnish and install concrete, reinforcing, and related materials.
   2. The Work includes:
      a. Providing concrete consisting of portland cement, fine and coarse aggregates, water, and approved admixtures; combined, mixed, transported, placed, finished, and cured.
      b. Fabricating and placing reinforcing, including ties and supports.
      c. Design, erection, and removal of formwork.
      d. Building all sleeves, frames, anchorage devices, inserts, and other items required into the concrete.
      e. Providing openings in concrete as required to accommodate Work under this and other Sections, and Work under other contracts.

B. Coordination:
   1. Review other Sections installation procedures and coordinate any item installation in the concrete Work.
   2. Notify other contractors in advance of placing concrete to provide other contractors with sufficient time for installing contracted items in the concrete Work.

C. Related Sections:
   1. Section 05 05 33, Anchor Systems.

1.2 REFERENCES

A. Standards referenced in this Section are:
   1. ACI 224R, Control of Cracking in Concrete Structures.
   2. ACI 301, Specifications for Structural Concrete for Buildings.
   3. ACI 304R, Guide for Measuring, Mixing, Transport¬ing and Placing Concrete.
   4. ACI 305R, Specification for Hot Weather Concreting.
   5. ACI 306R, Cold Weather Concreting.
   6. ACI 309R, Guide for Consolidation of Concrete.
   7. ACI 318, Building Code Requirements for Structural Concrete and Commentary.
   8. ACI 347, Guide to Formwork for Concrete.
   9. ACI SP-66, ACI Detailing Manual.
   10. ASTM A82/A82M, Specification for Steel Wire, Plain, for Concrete Reinforcement.

11. ASTM A185/A185M, Specification for Steel Welded Wire Reinforcement, Plain, for Concrete.
12. ASTM A615/A615M, Specification for Deformed and Plain Carbon-Steel Bars for Concrete Reinforcement.
13. ASTM C31/C31M, Practice for Making and Curing Concrete Test Specimens in the Field.
14. ASTM C33/C33M, Specification for Concrete Aggregates.
15. ASTM C39/C39M, Test Method for Compressive Strength of Cylindrical Concrete Specimens.
16. ASTM C42/C42M, Test Method for Obtaining and Testing Drilled Cores and Sawed Beams of Concrete.
17. ASTM C94/C94M, Specification for Ready-Mixed Concrete.
18. ASTM C138/C138M, Test Method for Density (Unit Weight), Yield, and Air Content (Gravimetric) of Concrete.
19. ASTM C143/C143M, Test Method for Slump of Hydraulic-Cement Concrete.
20. ASTM C150/C150M, Specification for Portland Cement.
21. ASTM C172, Practice for Sampling Freshly Mixed Concrete.
22. ASTM C231, Test Method for Air Content of Freshly Mixed Concrete by the Pressure Method.
23. ASTM C260, Specification for Air-Entraining Admixtures for Concrete.
24. ASTM C309, Specification for Liquid Membrane-Forming Compounds for Curing Concrete.
25. ASTM C494/C494M, Specification for Chemical Admixtures for Concrete.
26. ASTM C579, Methods for Compressive Strength of Chemical-Resistant Mortars, Grouts, Monolithic Surfacings, and Polymer Concretes.
27. ASTM C1064/C1064M, Standard Test Method for Temperature of Freshly Mixed Hydraulic-Cement Concrete.
28. ASTM D1752, Specification for Preformed Sponge Rubber Cork and Recycled PVC Expansion Joint Fillers for Concrete Paving and Structural Construction.
29. ASTM E96/E96M, Test Methods for Water Vapor Transmission of Materials
30. ASTM E154, Test Methods for Water Vapor Retarders Used in Contact with Earth Under Concrete Slabs, on Walls, or as Ground Cover.
31. CRD-C 572, U. S. Army Corps of Engineers Specification for Polyvinylchloride Waterstops.
32. CRSI 1MSP, Manual of Standard Practice.

1.3 QUALITY CONTROL AND INSPECTION

A. CONTRACTOR Qualifications:
   1. Minimum of five years of experience on comparable reinforced concrete projects.

B. Codes and Ordinances:
   1. Comply with the requirements of all regulatory agencies with jurisdiction at the site and perform the Work in accordance with the standards and codes listed in Section 1.2.
   2. In case of conflict between the referenced standards and codes, the more stringent requirements shall govern.

C. Inspection and Testing
   1. Each specified concrete mix design shall be verified by laboratory trial batch, unless otherwise indicated.
   2. Perform the following testing on each trial batch:
      a. Aggregate gradation for fine and coarse aggregates.
      b. Slump.
      c. Air content.
      d. Compressive strength based on three cylinders each tested at seven days and at 28 days.
   3. Submit the following information for each trial batch:
      a. Project identification name and number (if applicable).
      b. Date of test report.
      c. Complete identification of aggregate source of supply.
      d. Tests of aggregates for compliance with the Contract Documents.
      e. Scale weight of each aggregate.
      f. Absorbed water in each aggregate.
      g. Brand, type, and composition of cementitious materials.
      h. Brand, type, and amount of each admixture.
      i. Amounts of water used in trial mixes.
      j. Proportions of each material per cubic yard.
      k. Gross weight and yield per cubic yard of trial mixtures.
      l. Measured slump.
      m. Measured air content.
      n. Compressive strength developed at seven days and 28 days, from not less than three test cylinders cast for each seven day and 28-day test, and for each design mix.

1.4 SUBMITTALS

A. Action Submittals: Submit the following:
   1. Shop Drawings:
      a. List of concrete materials and concrete mix designs proposed for use.
      b. Laboratory Trial Batch Reports: Submit laboratory test reports for concrete cylinders, materials, and mix design tests.
      c. Drawings for fabricating, bending, and placing concrete reinforcing. Comply with ACI SP-66. Show bar schedules, stirrup spacing, epoxy dowels, splice lengths, diagrams of bent bars, arrangements, and assemblies, as required for fabricating and placing concrete reinforcing. Make shop drawings in accordance with ACI 315.
   2. Product Data:
      a. Manufacturer’s specifications with application and installation instructions for proprietary materials and items. This includes admixtures and bonding agents.
      b. Manufacturer’s certification that materials meet specification requirements.
      c. Complete identification of aggregate supply source.
      d. Brand, type, physical and chemical cement properties.

e. Complete mix designs including the proportioning of cement, fine and coarse aggregates and water. Brand, type, and amount of any proposed admixtures shall also be reported.

B. Informational Submittals: Submit the following:
   1. Delivery Ticket Copies: For each load of concrete delivered to or mixed at the Site. Each delivery tickets shall contain the information in accordance with ASTM C94/C94M. Delivery tickets shall also contain project identification name and number (if any), date, mix type, mix time, quantity and amount of water introduced.
   2. Site Quality Control Submittals:
      a. Report of testing results of field concrete cylinders for each required time period. Submit within 24 hours after completion of associated test. Test report shall include results of all testing required at time of sampling.

1.5 PRODUCT DELIVERY, STORAGE, AND HANDLING

A. Transportation, Delivery, and Handling:
   1. Deliver concrete reinforcing products to Site bundled, tagged, and marked. Use metal tags indicating bar size, lengths, and other information corresponding to markings on approved Shop Drawings.
   2. Concrete materials shall be clean and free from foreign matter during transportation and handling. Materials will be kept separate until measured and placed into concrete mixer.
   3. Implement suitable measures during hauling, piling, and handling to ensure that segregation of coarse and fine aggregate particles does not occur and grading is not affected.
   4. Deliver grout materials from manufacturers in unopened containers that bear an intact manu¬facturer label.

B. Storage:
   1. Store formwork materials above ground on framework or blocking. Cover wood for forms and other accessory materials with protective, waterproof covering. Provide for adequate air circulation or ventilation under cover.
   2. Store concrete reinforcing materials to prevent damage and accumulation of dirt and excessive rust. Store on heavy wood blocking so that reinforcing does not come into contact with the ground. Space framework or blocking supports to prevent excessive deformation of stored materials.
   3. Store concrete joint materials either on a platform, in an enclosure, or covered. Storage will prevent contact with ground, exposure to weather and direct sunlight.
   4. Provide bins or platforms with hard, clean surfaces for storing concrete materials
   5. Comply with Section 01 66 00, Product Storage and Handling Requirements.

PART 2 PRODUCTS

2.1 CONCRETE MATERIALS

A. Portland Cement: ASTM C150/C150M, Type II.
   1. One brand of cement shall be used throughout the Work to maintain uniform color and to establish undivided responsibility.

B. Aggregates: ASTM C33/C33M.
   1. All aggregates shall be clean washed material free of adherent coatings.
   2. Fine Aggregate: Clean, sharp, natural sand free of loam, clay, lumps, and other deleterious substances. Dune sand, bank run sand, and manufactured sand are unacceptable.
   3. Coarse Aggregate:
      a. Clean, uncoated, processed aggregate containing no clay, mud, loam, or foreign matter.
      b. Coarse aggregate shall comply with the following:
         1) Crushed stone, processed from natural rock or stone.
         2) Washed gravel, either natural or crushed. Slag, pit gravel, and bank-run gravel are not allowed.
         3) Maximum size: 1 ½ inches.

C. Water: Clean, potable.

D. Admixtures:
   1. Water-Reducing Admixture: ASTM C494/C494M, Type A.
   2. Use only admixtures that have been tested and approved in the mix designs.
   3. Do not use calcium chloride or admixtures containing chloride ions.

2.2 CONCRETE MIX

A. Concrete Proportions: Comply with ACI 301, 4.2.

B. Class I Concrete: Provide concrete to the following criteria:
   1. Compressive Strength (7 Day): 3,600 psi.
   2. Compressive Strength (28 Day): 4,500 psi.
   3. Water/Cement Ratio (Maximum): 0.45 by weight.

C. Slump Limits:
   1. 3 inches due to water
   2. 6 inches +/- 1 ½ inches with Water Reducing Admixture.

2.3 FORM MATERIALS

A. Provide form materials with sufficient stability to withstand pressure of placed concrete without bow or deflection. CONTRACTOR shall be responsible for designing the formwork system to resist all applied loads including pressures from fluid concrete and construction loads.

B. Smooth Form Surfaces: Acceptable panel-type to provide continuous, straight, smooth, as-cast surfaces in accordance with ACI 301.

C. Unexposed Concrete Surfaces: Material to suit project conditions.

D. Provide 3/4 inch chamfer at all external corners. Chamfer is not required at re-entrant corners unless otherwise shown or indicated.

E. Form Ties:
   1. Provide factory-fabricated, removable, or snap-off metal form ties that prevent form deflection and prevent spalling of concrete surfaces upon removal. Materials used for tying forms are subject to approval of ENGINEER.
   2. Provide ties so that portion remaining within concrete after removal of exterior parts is at least 1.5 inches from outer surface of concrete, unless otherwise shown or indicated. Provide form ties that, upon removal, will leave a uniform, circular hole not larger than one-inch diameter in the concrete surface, unless otherwise shown or indicated.
   3. Provide ties for exterior walls, below-grade walls, and walls subject to hydrostatic pressure with waterstops.
   4. Wire ties are unacceptable.

F. Form Release Agent: A colorless mineral oil which will not stain concrete or absorb moisture. The oil will not impair natural bonding or color characteristics of coating intended for use on concrete including curing compound, sealer, or water-proofing.

2.4 REINFORCING MATERIALS

A. Reinforcing Bars: ASTM A615/A615M, Grade 60 deformed bars.

B. Welded Wire Fabric: ASTM A185/A185M.

C. Steel Wire: ASTM A82/A82M.

D. Provide reinforcing supports including: bolsters, chairs, spacers, and other devices for spacing, supporting, and fastening.
   1. Use wire bar-type supports complying with CRSI MSP1 recommendations, except as specified in this Section. Do not use wood, brick, or other unacceptable materials.
   2. For slabs on grade use precast concrete blocks, minimum of four inches square , with compressive strength equal to or greater than the surrounding concrete. Alternatively use supports with sand plates or horizontal runners where base materials will not support chair legs.
   3. For all concrete surfaces where legs of supports are in contact with forms: provide supports having either hot-dip galvanized, plastic-protected, or stainless steel legs in accordance with CRSI MSP1.
   4. Provide precast concrete supports over waterproof membranes.

E. Epoxy Dowels:
   1. Dowels:
      a. Dowel reinforcing bars shall comply with ASTM A615, Grade 60.
   2. Adhesive:

a. For requirements for adhesive, refer to Section 05 05 33, Anchor Systems.

2.5 RELATED MATERIALS

A. Waterstops:
   1. Adhesive Waterstop (PPAWS): single-component, self-sealing plastic adhesive type, non-swelling extruded rope form between two protective silicone treated papers, 1 inch square cross section, 1 inch lap splice, furnish with primer; Synko-Flex Waterstop, Sika Lockstop, or as approved.
   2. 2. PVC Waterstop: Polyvinyl chloride, minimum 1450 psi tensile strength, minimum -35 degrees F working temperature, 6-inch-wide, 3/8-inch-thick, maximum possible lengths, non-tapered ribbed profile, pre-formed corner sections, heat-welded jointing; factory-installed hogrings or grommets at 12 inch spacing along length of waterstop; Sika Greenstreak, Durajoint, or as approved.

B. Vapor Retarder:
   1. Products and Manufacturers: Provide one of the following:
      a. Stego Wrap 10-mil Vapor Retarder, by Stego Industries LLC.
      b. Griffolyn 10-mil, by Reef Industries.
      c. Moistop Ultra, by Fortifiber Industries.
      d. Or equal.
   2. Vapor retarder membrane shall comply with the following.
      a. Water Vapor Transmission Rate, ASTM E96/E96M: 0.04 perms or lower.
      b. Water Vapor Retarder, ASTM E1745: Meets or exceeds Class C.
      c. Thickness of Retarder (plastic), ACI 302 1R: Not less than 10 mils.
      d. Provide accessories by same manufacturer as vapor retarder.
   3. Lap joints minimum 6 inches and seal water-tight by taping edges and ends.

C. Membrane-Forming Curing Compound: ASTM C309, Type I.

D. Joint Filler: ASTM D994; asphalt-impregnated fiberboard or felt; W.R. Meadows Asphalt Joint, or as approved.

2.6 GROUT

A. Non-shrink Grout:
   1. Pre-packaged, non-metallic, cementitious grout requiring only the addition of water at the Site.
   2. Minimum 28-day Compressive Strength: 7,000 psi.
   3. Products and Manufacturers: Provide one of the following:
      a. NS Grout by Euclid Chemical Company.
      b. Set Grout by Master Builders, Inc.
      c. NBEC Grout by Five Star Products, Inc.
      d. Or equal.

PART 3 EXECUTION

3.1 INSPECTION

A. CONTRACTOR shall examine the substrate and the conditions under which the Work will be performed and notify ENGINEER, in writing, of unsatisfactory conditions. Do not proceed with the Work until unsatisfactory conditions are corrected.

3.2 FORMWORK

A. Construct formwork in accordance with ACI 347 such that concrete members and structures are of correct size, shape, alignment, elevation, and position. Install concrete formwork tight to grade to prevent overpour or placement of concrete outside specified lines and grades.

B. Provide openings in formwork to accommodate the Work of other trades. Accurately place and securely support items required to be built into formwork.

C. Clean and adjust forms prior to placing concrete. Apply form release agents or wet forms as required. Re-tighten forms during and after concrete placing, when required, to eliminate cement paste leaks.

D. Removing Formwork:
   1. Comply with ACI 301 and ACI 347, except as otherwise indicated in the Contract Documents.
   2. Repair form tie-holes following in accordance with ACI 301.

3.3 REINFORCING, JOINTS, AND EMBEDDED ITEMS

A. Comply with the applicable recommendations of Laws and Regulations and standards referenced in this Section, including CRSI MSP1, for details and methods of placing and supporting reinforcing.

B. Clean reinforcing to remove loose rust, mill scale, earth, ice, and other materials which act to reduce or destroy bond between reinforcing material and concrete.

C. Position, support, and secure reinforcing against displacement during formwork construction and concrete placing. Locate and support reinforcing by means of metal chairs, runners, bolsters, spacers, and hangers as required.

D. Unless noted otherwise, maintain concrete cover for reinforcement as follows:

Item	Coverage
Footings and Concrete Formed Against Earth	3 inch
Slabs on Fill	3 inch
All Other	2 inch

E. Splices: Provide standard reinforcing splices by lapping ends, placing bars in contact, and tying tightly with wire. Lap splices to be a minimum of 40 bar diameters.

F. Do not place concrete until reinforcing is inspected and ENGINEER indicates that conditions are acceptable for placing concrete. Concrete placed in violation of this paragraph will be rejected. Notify ENGINEER, in writing, at least two working days prior to proposed concrete placement.

G. Joints:
   1. Provide construction joints as indicated or required. Locate construction joints so as to not impair the strength and appearance of the structure.
   2. Locations of joints shall be in accordance with the Contract Documents and as approved by ENGINEER in the Shop Drawings.
   3. Provide waterstop at all joints where shown.

H. Installation of Embedded Items: Set and build into the Work anchorage devices and embedded items required for other Work that is attached to, or supported by, cast-in-place concrete. Use setting diagrams, templates, and instructions provided under other Sections and, when applicable, other contracts for locating and setting. Refer to Paragraph 1.1.B of this Section. Do not embed in concrete uncoated aluminum items. Where aluminum items are in contact with concrete surfaces, coat aluminum to prevent direct contact with concrete.

3.4 CONCRETE PLACING

A. Use Class I concrete for structural concrete and equipment bases.

B. Site Mixing: Use drum-type batch machine mixer, mixing not less than 1.5 minutes for one cubic yard or smaller capacity. Increase required mixing time by minimum of 15 seconds for each additional cubic yard or fraction thereof.

C. Ready-Mixed Concrete: Comply with ASTM C94/C94M.

D. Concrete Placing:
   1. Place concrete in a continuous operation within planned joints or sections in accordance with ACI 304R.
   2. Do not begin placing concrete until work of other trades affecting concrete is completed.
   3. Wet concrete and subgrade surfaces to saturated surface dry condition immediately prior to placing concrete.
   4. Deposit concrete as near its final location as practical to avoid segregation due to re-handling or flowing.
   5. Avoid separation of the concrete mixture during transportation and placing. Concrete shall not free-fall for distance greater than four feet during placing.
   6. Complete concrete placing within 90 minutes of addition of water to the dry ingredients.

E. Consolidate placed concrete in accordance with ACI 309R. Use mechanical vibrating equipment supplemented with hand rodding and tamping, such that concrete is worked around placing and other embedded items and into all parts of formwork. Insert and withdraw vibrators vertically at uniformly-spaced locations. Do not use vibrators to transport concrete within the formwork. Vibration of formwork or placing is not allowed.

F. F. Protect concrete from physical damage or reduced strength due to weather extremes during mixing, placing, and curing.
   1. In hot weather comply with ACI 305R.
   2. In cold weather comply with ACI 306R.

G. Install vapor retarder under interior building slabs-on-grade. Lap joints minimum 6 inches and seal water-tight by taping edges and ends.

H. Slope positively floors containing sumps, gutters, or floor drains.

I. Form contraction joints to 1/4 depth of slab thickness. Locate joints as indicated.

3.5 QUALITY OF CONCRETE WORK

A. Make concrete solid, compact, smooth, and free of laitance, cracks, and cold joints.

B. Cut out and properly replace to extent directed by ENGINEER , or repair to satisfaction of ENGINEER, surfaces are cracked, contain voids, are unduly rough, or are in defective in any way. Patches or plastering are unacceptable.

C. Repair, removal and replacement of defective concrete directed by ENGINEER shall be at no additional cost to OWNER.

3.6 CURING

A. Begin initial curing as soon as free water has disappeared from exposed surfaces. Keep continuously moist for not less than 72 hours where possible. Continue curing by using moisture-retaining cover or membrane-forming curing compound. Cure formed surfaces by moist curing until formwork is removed. Provide protection, as required, to prevent damage to exposed concrete surfaces. Total curing period shall not be less than seven days. Curing methods and materials shall be compatible with scheduled finishes.

3.7 FINISHING

A. Slab Finish:
   1. After placing concrete slabs, do not work the surface further until ready for floating. Begin floating when surface water has disappeared or when concrete has stiffened sufficiently. Use a wood float only. Check and level surface plane to a tolerance not exceeding 1/4-inch in 10 feet when tested with a 10-foot straightedge placed on the surface at no less than two different angles. Cut down

high spots and fill low spots. Uniformly slope surfaces to drains. Immediately after leveling, re-float the surface to a uniform, smooth, granular texture. Slab surfaces shall receive a float finish. Provide additional trowel finishing as required in this Section.

2. After floating, begin first trowel finish operation using power-driven trowel. Begin final troweling when surface produces a ringing sound as trowel is moved over the surface.
3. Consolidate concrete surface by the final hand troweling operation. Finished concrete shall be free of trowel marks, uniform in texture and appearance, and with a surface plane tolerance not exceeding 1/8-inch in 10 feet when tested with a 10-foot straightedge. Grind smooth surface defects that would telegraph through applied floor covering system.
4. Use trowel finish for the following:
   a. Interior exposed slabs, unless otherwise shown or indicated.
   b. Apply non-slip broom finish after troweling to exterior concrete slabs, walks and steps.

B. Formed Finish:
1. Provide smooth form concrete finish at exposed surfaces. Use largest practical form panel sizes to minimize form joints. All surfaces shall be considered exposed, unless buried or covered with permanent structural or architectural material. After removing forms, patch form tie holes and defects in accordance with ACI 301. Remove fins exceeding 1/8-inch in height. Remove all fins flush with concrete surface where surface will be coated or will receive further treatment.
2. Provide rough form finish at all unexposed surfaces. After removing forms, patch form tie holes and defects in accordance with ACI 301. Remove fins exceeding 1/2-inch in height.

3.8 GROUT PLACING

A. Place grout as shown and indicated, and in accordance with grout manufacturer's instructions and recommendations. If grout manufacturer's instructions conflict with the Contract Documents, notify ENGINEER and do not proceed until obtaining ENGINEER's clarification.

B. Dry-packing is not allowed, unless otherwise indicated.

3.9 FIELD QUALITY CONTROL

A. Site Testing Services:
1. CONTRACTOR shall employ independent testing laboratory to perform field quality control testing for concrete. ENGINEER will direct where samples are obtained.
2. Testing laboratory will provide all labor, material, and equipment required for sampling and testing concrete. Including: scale, glass tray, cones, rods, molds, air tester, thermometer, and other incidentals required.

B. Quality Control Testing During Construction:
   1. Perform sampling and testing for field quality control during concrete placing, as indicated on drawings.
      a. Submit test results from certified testing laboratory to ENGINEER within 24 hours of completion of test.
      b. When there is evidence that strength of in place concrete does not comply with the Contract Documents, ENGINEER shall employ the services of concrete testing laboratory to obtain cores from hardened concrete for compressive strength determination tests at the discretion of ENGINEER. Cores and tests shall comply with ASTM C42/C42M.

END OF SECTION

THIS PAGE INTENTIONALLY LEFT BLANK

SECTION 04200

MASONRY

PART 1 - GENERAL

1.1 DESCRIPTION

A. Scope:
   1. CONTRACTOR shall provide labor, materials, equipment, and incidentals as shown, specified and required for masonry Work
   2. Types of products and features required include:
      a. Concrete unit masonry.
      b. Masonry mortar and grout.

B. Coordination:
   1. Review installation procedures under other Specification Sections and coordinate the items that must be installed with unit masonry construction Work.
   3. Coordinate Work under other Specification Sections to avoid delay of masonry construction.

C. Related Sections:
   1. Section 03300, Concrete.

1.2 REFERENCES

A. Referenced Standards: Standards referenced in this Section are:
   1. ACI 530, Building Code Requirements for Masonry Structures.
   2. ACI 530.1, Specification for Masonry Structures.
   3. ASTM A82, Standard Specification for Steel Wire, Plain, for Concrete Reinforcement
   4. ASTM A153, Standard Specification for Zinc Coating (Hot-Dip) on Iron and Steel Hardware.
   5. ASTM A615, Standard Specification for Deformed and Plain Carbon - Bars for Concrete Reinforcement.
   6. ASTM C5, Standard Specification for Quicklime for Structural Purposes.
   7. ASTM C33, Standard Specification for Concrete Aggregates.
   8. ASTM C90, Standard Specification for Hollow Load-Bearing Concrete Masonry Units.
   9. ASTM C91, Standard Specification for Masonry Cement.
   10. ASTM C136, Standard Test Method for Sieve or Screen Analysis of Fine and Coarse Aggregates.
   11. ASTM C140, Test Methods for Sampling and Testing Concrete Masonry Units and Related Units.
   12. ASTM C144, Standard Specification for Aggregate for Masonry Mortar.
   13. ASTM C150, Standard Specification for Portland Cement.
   14. ASTM C207, Standard Specification for Hydrated Lime for Masonry

Purposes.

15. ASTM C270, Standard Specification for Mortar for Unit Masonry.
16. ASTM C387, Standard Specification for Packaged, Dry, Combined Materials for Mortar and Concrete.
17. ASTM C404, Standard Specification for Aggregates for Masonry Grouts.
18. ASTM C1314, Standard Test Method for Compressive Strength of Masonry Prisms.
19. NCMA, Guide Specifications and Technical Bulletins.

1.3 QUALITY ASSURANCE

A. Qualifications:
   1. Installer: Hire a single installer regularly engaged in preformed unit masonry installation and with successful and documented experience in erecting unit masonry of scope and type of Work required; and employs only tradesmen with specific skill and successful experience in this type of Work.

1.4 SUBMITTALS

A. Action Submittals:
   1. Shop Drawings: Submit the following:
      a. Shop Drawing for fabrication, bending, and placement of reinforcing bars. Show bar schedules, diagrams of bent bars, stirrup spacing, lateral ties and other arrangements and assemblies as required for fabricating and placing reinforcing for unit masonry Work.
   2. Product Data: Submit the following:
      a. Copies of manufacturer's specifications and test data for each type of concrete masonry unit specified, including certification that concrete masonry unit complies with Contract Documents. Include instructions for handling, storage, installation and protection of each type of concrete masonry unit.
   3. Samples: Submit the following:
      a. Color Sample board showing standard colors.

1.5 JOB CONDITIONS

A. Hot Weather Unit Masonry Work: Protect unit masonry Work by methods acceptable to ENGINEER from direct exposure to wind and sun when surrounding air temperature is 99 degrees F in the shade with relative humidity less than 50 percent.

PART 2 - PRODUCTS

2.1 MORTAR MATERIALS

A. Portland Cement: Provide the following for Portland cement-lime mortars:
   1. ASTM C150, Type I.
   2. Use ASTM C150, Type III high-early strength, for laying masonry when air temperature is less than 50 degrees F.
   3. Provide nonstaining Portland cement of natural color.

B. Masonry Cement: Provide the following for masonry cement mortars:
   1. ASTM C91 Type S, proportioned to comply with ASTM C270.
   2. Maximum Air Content, ASTM C91: 19 percent.
   3. Non-staining.

C. Hydrated Lime: ASTM C207 Type S, or lime putty ASTM C5.

D. Sand Aggregates:
   1. ASTM C144, except for joints less than ¼-inch, use aggregate graded with 100 percent passing the No. 16 sieve.
   2. White Mortar Aggregates: Provide natural white sand or ground white stone for Portland cement-lime mortars.
   3. Fine Aggregate for Grout: Sand, ASTM C404, Size No. 1.
   4. Course Aggregate for Grout: ASTM C404, Size No. 8 or Size No. 89.

F. Ready-mixed Mortar: Cementitious materials, water, and aggregate complying with requirements specified for mortar materials, combined with set-controlling admixtures to produce a ready-mixed mortar complying with ASTM C270 and C387.

G. Water: Free from injurious amounts of oils, acids, alkalis, or organic matter, and clean, fresh, and potable.

2.2 MORTAR MIXES

A. General:
   1. Calcium Chloride: Not allowed.

B. Mortar for Unit Masonry: Comply with ASTM C270, Table 2, except limit materials to those specified in this Section, do not substitute ASTM C91 masonry cement for ASTM C150 Portland cement without a submittal approval by ENGINEER

C. Grout:
   1. Fine Grout:
      a. Provide the following proportions by volume:
         1) Portland Cement: One part.
         2) Hydrated Lime or Lime Putty: Zero to 1/10 part.
         3) Aggregate Ratio (Measured in a Damp Loose Condition): Sand shall be not less than 2.25 times and not more than three times sum of volumes of cement and lime.
      b. Mix grout to have a slump of ten inches plus or minus one-inch at placement.
   2. Coarse Grout:
      a. Provide the following proportions by volume:
         1) Portland Cement: One part.
         2) Hydrated Lime or Lime Putty: Zero to 1/10 part.
         3) Fine Aggregate Ratio (Measured in a Damp Loose Condition): Sand shall be not less than 2.25 times and not more than three times sum of volumes of cement and lime.

4) Coarse Aggregate Ratio: Not less than one and not more than two times sum of volumes of cement and lime.

b. Mix grout to have slump of ten inches plus or minus one-inch, at placement.

2.3 CONCRETE MASONRY UNITS

A. General: Concrete masonry units shall comply with requirements below.

B. Hollow Concrete Masonry Units: ASTM C90

F. Size: Manufacturer's standard units with nominal face dimensions of 16 inches long by eight inches high by nominal width dimension shown on Drawings (15-5/8-inches by 7-5/8-inches actual).

G. Special Shapes: Provide the following:

1. Lintels, bond beams, reinforcing units, and flush-end reinforcing units, interior and exterior corner shapes, solid jambs, sash block, coves, pre-molded control joint blocks, headers, and other special conditions.
3. End blocks at all locations where masonry walls abut concrete, or steel columns to facilitate installation of compressible filler, backer rod.

J. Provide two-core concrete masonry units.

2.7 MASONRY ACCESSORIES

A. Continuous Horizontal Wire Reinforcing and Ties for Masonry: Provide the following unless otherwise shown:

1. General: Welded wire units prefabricated in straight lengths of not less than ten feet, with matching corner "L" and intersection "T" units. Fabricate from cold-drawn steel wire complying with ASTM A82, with deformed continuous 3/16-inch gage side rods and plain 9 gage cross rods, crimped for cavity wall construction, with unit width of 1.5 to two inches less than thickness of wall or partition. All reinforcing and ties shall be hot dipped galvanized after fabrication with 1.5 ounces per square foot of zinc coating complying with ASTM A153, Class B-2, unless otherwise specified.
2. For single-wythe masonry, use units fabricated as follows:
   a. Truss-type fabricated with one horizontal rod beneath each unit masonry shell wall and continuous diagonal cross-rods spaced not more than 16 inches on centers.
   b. Products and Manufacturers: Provide one of the following:
      1) #120 Truss-Mesh by Hohmann and Barnard, Inc.
      2) Series 300 Single Wythe System by Wire-Bond.
      3) DA 3100 Truss by Dur-O-Wall, a Dayton Superior Company.
      4) Or equal.
7. Compressible Filler: Provide watertight joint filler where unit masonry construction abuts structural framework members, or as shown. Provide the following:

a. Polyurethane foam strip saturated with polybutylene waterproofing material which, when installed at a compression ratio of two-to-one, is impermeable to water.
b. Resilient to -40 degrees F with 100 percent movement recovery.
c. Elongation of 140 percent with a tensile strength of not less than 53 pounds per square inch.
d. Products and Manufacturers: Provide products of one of the following:
1) Polytite Standard by Polytite Manufacturing Corporation.

C. Size: Manufacturer's standard units with nominal face dimensions of 16 inches long by eight inches high by nominal width dimension shown on Drawings (15-5/8-inches by 7-5/8-inches actual).

D. Special Shapes: Provide the following:
1. Lintels, bond beams, reinforcing units, flush-end reinforcing units, interior and exterior corner shapes and other special conditions.
2. End blocks at all locations where masonry walls abut building structure to facilitate installation of compressible filler, backer rod.

E. Provide two-core concrete masonry units.

2.4 MASONRY ACCESSORIES

A. Provide the following, where shown:
1. Reinforcing Bars:
a. Deformed carbon steel, ASTM A615, Grade 60 for bars No. 3 to No. 18 except as otherwise shown.

B. Continuous Horizontal Wire Reinforcing and Ties for Masonry: Provide the following unless otherwise shown:
1. General: Welded wire units prefabricated in straight lengths of not less than ten feet, with matching corner "L" units. Fabricate from cold-drawn steel wire complying with ASTM A82, with deformed continuous 3/16-inch gage side rods and plain 9 gage cross rods, crimped for cavity wall construction, with unit width of 1.5 to two inches less than thickness of wall or partition. All reinforcing and ties shall be hot dipped galvanized after fabrication with 1.5 ounces per square foot of zinc coating complying with ASTM A153, Class B-2, unless otherwise specified.
2. Use units fabricated as follows:
a. Truss-type fabricated with one horizontal rod beneath each unit masonry shell wall and continuous diagonal cross-rods spaced not more than 16 inches on centers.
b. Products and Manufacturers: Provide one of the following:
1) #120 Truss-Mesh by Hohmann and Barnard, Inc.
2) Series 300 Single Wythe System by Wire-Bond.
3) DA 3100 Truss by Dur-O-Wall, a Dayton Superior Company.
4) Or equal.

C. Compressible Filler: Provide joint filler where unit masonry construction abuts structure, or as shown.

PART 3 - EXECUTION

3.1 INSPECTION

A. CONTRACTOR and installer shall examine areas and conditions under which unit masonry construction Work will be installed, and notify ENGINEER of unsatisfactory conditions. Do not proceed with the Work until unsatisfactory conditions have been corrected in a manner acceptable to ENGINEER.

3.2 PREPARATION

A. Measurement of Mortar Materials:
   1. Cement and Hydrated Lime: Batched by the bag.
   2. Sand: Batched by volume in suitably calibrated containers, provided proper allowance is made for bulking and consolidation and for weight per cubic foot, of contained moisture.
   3. Proportion of Volumetric Mixtures: One 94-pound sack of Portland cement and one 50-pound sack of hydrated lime constitute nominal one cubic foot.
   4. Shovel measurement: Not allowed.

B. Mortar Mixing:
   1. Type of Mixer: Machine mix in approved mixer in which quantity of water is accurately and uniformly controlled.
   2. While mixer is in operation add approximately three-quarters of required water, half the sand, all the cement, then add remainder of sand.
   3. Allow batch to mix briefly then add water in small quantities until satisfactory workability is obtained.
   4. Mix for at least five minutes after all materials have been added.
   5. Hydrated Lime for Mortar Requiring Lime Content: Use dry-mix method. Turn over materials for each batch together until even color of mixed, dry materials indicates that cementitious material has been thoroughly distributed throughout mass, then add water to obtain required plasticity.
   6. Lime putty, if approved for use, shall be prepared in accordance with ASTM C5.
   7. Mixer drum shall be completely emptied before recharging next batch.
   8. Re-tempering of mortar is not allowed.

C. Cleaning Reinforcement: Before being placed, remove loose rust, mill scale, earth, ice, and other coatings except galvanizing from reinforcement. Do not use reinforcing bars with kinks or bends not shown on Drawings or approved Shop Drawings, or bars with reduced cross-section.

3.3 INSTALLATION, GENERAL

A. Thickness: Build single-wythe walls to actual thickness of masonry units using units of nominal thickness shown or specified.

3.4 LAYING MASONRY WALLS

A. General:
   1. Mortar
      b. Use coarse grout fill for structural requirements and for grouting reinforcing steel in unit masonry construction Work.
      c. Do not use mortar that has begun to set or if more than 30 minutes have elapsed since initial mixing. Re-temper mortar during the 30-minute period only as required to restore workability.
   2. Lay out walls in advance for accurate spacing of surface pattern bond with uniform joint widths and to properly locate openings, masonry control joints, returns, and offsets. Avoid using less than half-size units at corners, jambs, and where possible at other locations.
   3. Lay up walls plumb and true to comply with specified tolerances, with courses level, accurately spaced, and coordinated with other Work.
   4. Pattern Bond Unit Masonry:
      a. Lay all unit masonry Work visible in the finished Work in running bond with vertical joints in each course centered on units in courses above and below. Avoid using less than full-size units.
      b. Bond and interlock each course of each wythe at corners.
      c. Do not use units with less than eight-inch horizontal face dimensions at corners or jambs.
      d. Interlock alternate courses at corners.

B. Construction Tolerances:
   1. Variation from Plumb: For lines and surfaces of columns, walls and arises, do not exceed 1/4-inch in 10 feet, or 3/8-inch in a story height (20 feet maximum), nor two-inch in 40 feet or more. Except for external corners, expansion joints and other conspicuous lines, do not exceed 1/4-inch in any story or 20 feet maximum, nor two-inch in 40 feet or more.
   2. Variation from Level: For lines of exposed lintels, sills, parapets, horizontal grooves and other conspicuous lines, do not exceed 1/4-inch in any bay or 20 feet maximum, nor 3/4-inch in 40 feet or more.
   3. Variation of Linear Building Line: For position shown and related portion of columns, walls and partitions, do not exceed two-inch in any bay or 20 feet maximum, nor 3/4-inch in 40 feet or more.
   4. Variation in Cross-sectional Dimensions: For columns and thickness of walls, from dimensions shown, do not exceed minus 1/4-inch nor plus two-inch.

C. Mortar Bedding and Jointing:
   1. Lay solid masonry units with completely filled bed and head joint; butter ends with sufficient mortar to fill head joints and shove into place. Do not slush head joints.
   2. Lay hollow masonry units with full mortar coverage on horizontal and vertical face shells. Bed webs in mortar in starting course where adjacent to cells or cavities to be reinforced or filled with concrete or grout. Lay walls with 3/8-inch joints.
   3. Cut joints flush for masonry walls that are to be concealed or to be covered by other materials, except paint, unless otherwise shown.
   4. Tool exposed joints, when mortar is "thumbprint" hard, slightly concave. Rake out mortar in preparation for application of calking or sealants where required.

5. Remove masonry units disturbed after laying; clean and reset in fresh mortar. Do not pound corners at jambs to fit stretcher units which have been set in position. If adjustments are required, remove units, clean off mortar and reset in fresh mortar.

D. Stopping and Resuming Work: Rake back half-unit masonry length in each course; do not tooth. Clean exposed surfaces of set masonry, wet units lightly, if required, and remove loose masonry units and mortar prior to laying new masonry.

E. Horizontal Joint Reinforcing:
   1. Provide continuous horizontal joint reinforcing as specified. Fully embed longitudinal side rods in mortar for their entire length with minimum cover of 5/8-inch on exterior side of walls and 1/2-inch at other locations. Lap reinforcement minimum of six inches at ends of units. Do not bridge masonry control joints with reinforcing.
   2. Reinforce all masonry walls with continuous horizontal joint reinforcing unless specifically noted or specified to be omitted.
   3. Provide continuity at corners and wall intersections by use of prefabricated “L” and “T” sections. Cut and bend units in accordance with manufacturer’s written instructions.
   4. Space continuous horizontal reinforcing at 16 inches on centers vertically, unless otherwise shown.

F. Structural Reinforced Unit Masonry Construction:
   1. Comply with the requirements of ACI 530.1 and applicable codes.
   2. Lap reinforcing bars as shown.

K. Grouting Structural Reinforced Unit Masonry Construction:
   1. Comply with requirements of ACI 530.1 and applicable codes.

3.5 REPAIR, POINTING, AND CLEANING

A. Remove and replace masonry units that are loose, chipped, broken, stained, or otherwise damaged, or if units do not match adjoining units as intended. Provide new units to match adjoining units and install in fresh mortar or grout, pointed to eliminate evidence of replacement.

B. Pointing: During tooling of joints, enlarge voids or holes, except weep holes, and completely fill with mortar. Point up all joints at corners, openings and adjacent Work to provide neat, uniform appearance, properly prepared for application of sealant compounds.

C. Cleaning: Do not use acid cleaning agent, abrasive tools or powders, or metal cleaning tools or wire brushes, unless specifically recommended in writing by manufacturer.

D. Protection:
   1. Protect unit masonry construction Work from deterioration, discoloration or damage during subsequent construction operations.

+ + END OF SECTION + +

SECTION 05410

COLD FORMED METAL FRAMING

PART 1 GENERAL

1.1 DESCRIPTION

A. Scope
   1. CONTRACTOR shall provide all labor, materials, equipment, and incidentals as shown and indicated in the Contract Documents and specifications to furnish cold formed metal framing for the Work.
   2. This Section includes:
      a. Metal stud wall framing.
      b. Metal joist ceiling framing.
      c. Track, bracing, fasteners, and related accessories for a complete installation.
      d. Plywood sheeting.
      e. Gypsum board.
      f. Sound deadening board.
   3. CONTRACTOR shall be completely responsible for the proper start-up, operation, and functions of the cold formed metal framing herein specified. CONTRACTOR shall be responsible for coordination of all interfaces with other subcontractors to achieve the required operation.

B. Coordination:
   1. Review installation procedures under this and other Sections and coordinate with other contractor or subcontractor on sequencing of related installation or work. Provide sufficient notification to OWNER and subcontractors on installation that may impact OWNER operations or work conducted by other contractors/subcontractors.
   2. Notify other contractors in advance of the installation of the cold formed metal framing to provide them with sufficient time for the installation of items included in their contracts that must be installed with, or before, the cold formed metal framing Work.

1.2 QUALITY ASSURANCE

A. Manufacturer/Supplier's Qualifications:
   1. Manufacturer/supplier shall have a minimum of five years of experience of producing substantially similar equipment and/or materials, and shall be able to show evidence of at least five installations in satisfactory operation for at least five years.
   2. Obtain all equipment and/or materials included in this Section regardless of the component manufacturer from a single manufacturer/supplier.
   3. All components shall be specifically constructed for the specified service conditions and shall be integrated into the overall assembly by the cold formed metal framing manufacturer/supplier.

1.3 SUBMITTALS

Submit the following:

A. Action Submittals: Include placing drawings for framing members showing size and gauge designations, number, type, location, and spacing. Indicate supplemental strapping, bracing, splices, bridging, accessories, anchorage, and details required for proper installation.

PART 2 PRODUCTS

2.1 MATERIALS

A. Steel Sheet for Framing Members: ASTM A 653/A 653M, structural steel, zinc coated, Grade 33 or Grade 50.

2.2 FRAMING MEMBERS

A. Ceiling Joists and wall studs shall be 8” stud/joist sections with 1-5/8” flanges, minimum 54 mils thickness; designation 800S162-54, Grade 50, spaced at 16 inches on center.

2.3 FRAMING ACCESSORIES

A. Fabricate steel-framing accessories of the same material and finish used for framing members, with minimum yield strength of 33,000 psi (230 Mpa).

B. Provide accessories of manufacturer’s standard thickness and configuration.

2.4 MISCELLANEOUS MATERIALS

A. Screws: Corrosion-resistant coated, self-drilling, pan or hex washer head.

B. Expansion Anchors: Refer to Section 05 05 33, Anchor Systems.

C. Plywood Roof Sheathing: APA-Rated Sheathing, Structural I, Span Rating 32/16; Exposure Durability 1 or exterior; unsanded, square edge.

D. Gypsum Board Materials:
   1. Manufacturers:
      a. Gold Bond Building Products Div., National Gypsum Co.
      b. United States Gypsum Co.
      c. Or equal.
   2. Standard Gypsum Board: ASTM C1396; 5/8 inch thick, maximum permissible length; ends square cut, tapered edges.
   3. Moisture-Resistant Gypsum Board: ASTM C630; 5/8 inch thick, maximum permissible length; ends square cut, tapered edges.

4. Accessories:
    a. Corner Beads: ASTM C1047, galvanized steel.
    b. Edge Trim: ASTM C1047, galvanized steel.
    c. Control Joints: ASTM C1047, galvanized steel.
    d. Joint Materials: Reinforcing tape, joint compound, adhesive, and water as instructed by manufacturer.

E. Sound Deadening Board:
    1. ½ inch thick fiberboard, Hushboard Sound Deadening Board by Georgia Pacific or equal.

2.5 FABRICATION

A. Fabricate assemblies to size and configuration required.

B. Cut all framing components square for attachment to perpendicular members, or as required for an angular fit against abutting members.

C. Fasten components with self-drilling screws or welding. Furnish screws of sizes to be sufficient to ensure strength of connection. Touch up all welds with zinc-rich primer, as specified in Section 09 91 00, Painting. Mechanical fasteners, either powder-actuated or pneumatically driven, are prohibited.

D. Reinforce and brace assemblies to withstand handling stresses.

PART 3 EXECUTION

3.1 EXAMINATION

A. Examine supporting substrates and abutting structural framing for compliance with requirements for installation tolerances and other conditions affecting performance. Proceed with installation only after unsatisfactory conditions have been corrected.

3.2 GENERAL INSTALLATION

A. Cold formed metal framing may be shop or field fabricated for installation, or it may be field assembled.

B. Install cold formed metal framing according to ASTM C 1007, unless more stringent requirements are indicated.

C. Install cold formed metal framing and accessories plumb, square, and true to line, and with connections securely fastened, according to manufacturer’s written recommendations and requirements in this Section.
    1. Cut framing members by sawing or shearing; do not torch cut.
    2. Fasten cold formed metal framing members by welding or screw fastening, as standard with fabricator. Wire tying of framing members is not permitted.

D. Comply with AWS D1.3 requirements and procedures for welding, appearance and quality of welds, and methods used in correcting welding work.

E. Mechanical fasteners, either powder-actuated or pneumatically driven, are prohibited.

F. Studs:
   1. Secure bottom track in place.
   2. Install studs at spacing as shown on Drawings, at each side of openings and not more than 2 inches from abutting walls.
      a. Frame corners with three studs.
      b. Frame wall openings wider than stud spacing with double stud at each jamb.
   3. Install supplementary framing or blocking to support work attached to framing.
   4. Secure top and perimeter track as required.

G. Locate ceiling joists directly over wall studs. Secure to track as indicated.

H. Secure roof sheathing perpendicular to framing members with sheet ends over firm bearing. Use sheathing clips between sheets between roof framing members.

I. Gypsum Board Installation
   1. Comply with manufacturer's instructions.
   2. Erect board in most economical direction with ends and edges occurring over firm bearing surface. Use maximum practical length of board to reduce end joints.
   3. Apply first to ceiling, perpendicular to framing members, then to walls. Use moisture-resistant gypsum board on exterior side of wall framing.
   4. Tape, fill, and sand exposed joints, edges, and corners to produce a Type V smooth surface ready to receive finishes. Feather coats onto adjoining surfaces so that camber is maximum 1/32 inch.

J. Install sound deadening board between gypsum board and wall and ceiling studs in accordance with manufacturer’s instructions. Install sound deadening boards on both sides of wall studs.

3.3 TOLERANCES

A. Studs: Vertical alignment (plumbness) 1/960 (1/8 inch in ten feet).

B. Walls: Horizontal alignment (levelness) 1/960 (1/8 inch in ten feet).

C. Stud Spacing: 1/8 inch from designated spacing providing that the cumulative error does not exceed requirements of finishing materials.

D. Maximum Variation of Finished Gypsum Board Surface from True Flatness: 1/16 inch in 10 feet in any direction.

END OF SECTION

SECTION 05501

ANCHOR SYSTEMS

PART 1 GENERAL

1.1 DESCRIPTION

A. Scope:
   1. CONTRACTOR shall provide all labor, materials, equipment, and incidentals as shown, specified, and required to furnish and install anchor systems.
   2. This specification covers the fabrication and supply of anchor systems as shown on the Contract Drawings, as recommended by equipment manufacturers, as specified herein, and as directed by OWNER.
   3. This Section includes all anchor systems required for the Work, but not specified under other Sections.

B. Coordination:
   1. Review installation procedures under this and other Sections, and coordinate with other contractors on sequencing of related installation or work. Provide sufficient notification to OWNER and other contractors on installation that may impact OWNER operations or work conducted by other contractors.

1.2 REFERENCES

A. Standards referenced in this Section are:
   1. ACI 318, Building Code Requirements for Structural Concrete.
   2. ASTM A563, Specification for Carbon and Alloy Steel Nuts.
   3. ASTM C881/C881M, Specification for Epoxy-Resin-Base Bonding Systems for Concrete.
   4. ASTM F593, Specification for Stainless Steel Bolts, Hex Cap Screws, and Studs.
   5. ASTM F594, Specification for Stainless Steel Bolts, Hex Cap Screws, and Studs.
   6. ASTM F1554, Specification for Anchor Bolts, Steel, 36, 55 and 105-ksi Yield Strength.
   7. FS A-A-1923A, Concrete Expansion Anchors.
   8. ICC-ES AC193, Acceptance Criteria for Mechanical Anchors in Concrete Elements.
   9. ICC-ES AC308, Acceptance Criteria for Post-Installed Adhesive Anchors in Concrete Elements.

1.3 SUBMITTALS

Submit the following:

A. Action Submittals:
   1. Shop Drawings:

a. Listing of all anchor systems products intended for use in the Work including product type, intended location in the Project, and embedded lengths.

2. Product Data:
   a. Manufacturer's specifications, load tables, dimension diagrams, acceptable base material conditions, acceptable drilling methods, and acceptable bored hole conditions.
   b. When required by ENGINEER, copies of valid ICC ES reports that present load-carrying capacities and installation requirements for anchor systems.

1.4 DELIVERY, STORAGE, AND HANDLING

A. Packing, Shipping, Handling, and Unloading:
   1. Deliver materials to the Site to ensure uninterrupted progress of the Work. Deliver anchor bolts and anchorage devices, which are to be embedded in cast-in-place concrete, in ample time to prevent delay of the Work.

B. Store all equipment in accordance with Section 01 66 00, Product Storage and Handling Requirements.

PART 2 PRODUCTS

2.1 SYSTEM PERFORMANCE

A. General:
   1. Provide materials as shown on the Contract Drawings and as specified. Provide appropriate product where corrosion-resistant materials are required unless otherwise specified.
   2. Stainless Steel Nuts:
      a. Provide ASTM A194/A194M, Grade 8S (Nitronic 60) stainless steel nuts for anchor bolts and adhesive anchors. When ASTM A194/A194M, Grade 8S (Nitronic 60) nuts are not required or specified for anchor bolts and adhesive anchors, provide anti-seizing compound where stainless steel rods are used with stainless steel nuts of the same type.
      b. For stainless steel anchors used for anchoring equipment and other locations, if any, where the attachment will require future removal for operation or maintenance, provide lock washer or double nuts on each anchorage device.
      c. For other locations, provide for each anchorage device a nut as specified or as required by anchor manufacturer.

B. Application:
   1. Anchor Bolts:
      a. Where anchor bolt is shown or indicated, use cast-in-place anchor bolt unless another anchor type is approved by ENGINEER.
      b. Provide anchor bolts as shown or indicated, or as required to secure structural element to appropriate anchor surface.
   2. Concrete Adhesive Anchors:

a. Use where adhesive anchors are shown or indicated for installation in concrete.

3. Concrete Expansion Anchors:
   a. Use where expansion anchors are shown or indicated for installation in concrete.
   b. Do not use where subject to vibration.
   c. Do not use in exterior locations or locations subject to freezing.
   d. Do not use in submerged, intermittently submerged, or buried locations.

2.2 MATERIALS

A. Anchor Bolts:
   1. Interior Dry Non-Corrosive Locations
      a. Straight threaded carbon steel rods complying with ASTM F1554, Grade 36 and heavy hex nuts complying with ASTM A563 Grade A, unless otherwise shown or indicated on the Drawings.
      b. Hooked anchor bolts are unacceptable.
   2. Exterior, Buried, Submerged Locations, or When Exposed to Wastewater
      a. Stainless steel straight threaded rods complying with ASTM F593, AISI Type 316, Condition A and stainless steel nuts complying with ASTM F594, AISI Type 316.
      b. ASTM A194/A194M, Grade 8S (Nitronic 60) stainless steel nuts where required.
      c. Other AISI types may be used when approved by ENGINEER.
      d. Hooked bolts are unacceptable.
   3. Equipment
      a. Anchor bolts complying with material requirements of this Section and equipment manufacturer's requirements relative to size, embedment length, and anchor bolt projection. Anchor bolts shall be straight threaded rods with washers and nuts as specified in this Section.
      b. Hooked bolts are unacceptable.
   4. Anchoring of Structural Elements
      a. Anchor bolts of size, material, and strength shown or indicated on the Contract Drawings, Shop Drawings and in the specifications .

B. Adhesive Anchors:
   1. General:
      a. Adhesive anchors shall consist of threaded rods anchored into hardened concrete using an adhesive system.
      b. Specified adhesive system shall be used to anchor reinforcing dowels into hardened concrete.
   2. Products and Manufacturers: Provide one of the following:
      a. HIT-RE 500-V3 Epoxy Adhesive Anchoring System, by Hilti Fastening Systems, Inc.
      b. SET-XP Epoxy-Tie Adhesive, by Simpson Strong-Tie Company, Inc.
      c. Or equal.
   3. Adhesive:
      a. Adhesive system shall use two-component adhesive mix.

b. Epoxy adhesives shall comply with physical requirements of ASTM C881/C881M, Type IV, Grade 2 and 3, Class A, B, and C, except gel times.
c. Adhesives shall have a current evaluation report by ICC Evaluation Service for use in both cracked and uncracked concrete with seismic recognition for SDC A through F as tested and assessed in accordance with ICC-ES AC308.

4. Anchor:
   a. Provide continuously-threaded, carbon steel or AISI Type 316 stainless steel adhesive anchor rod as required. Threaded rods shall comply with the concrete adhesive anchor manufacturer's specifications. Nuts shall have specified proof load stresses equal to or greater than the minimum tensile strength of the stainless steel threaded rod used. Provide ASTM A194/A194M, Grade 8S (Nitronic 60) stainless steel nuts where required.
   b. Stainless steel threaded rod shall comply with ductility requirements of ACI 318 Appendix D, Section D.3.3.

C. Expansion Anchors:
1. General:
   a. Expansion anchors shall each consist of stud, wedge, nut, and washer.
2. Product and Manufacturers: Provide one of the following:
   a. Kwik-Bolt TZ Expansion Anchors, by Hilti Fastening Systems, Inc.
   b. Wedge-All Wedge Anchors, by Simpson Strong-Tie Company, Inc.
   c. Or equal.
3. Anchors shall comply with physical requirements of FS A-A-1923A, Type 4. Anchors shall be non-bottom-bearing type with single-piece steel expansion clip providing 360-degree contact with base material and shall not require oversized holes for installation.
4. Interior Dry Non-corrosive Locations: Provide carbon steel anchors complete with nuts and washers, zinc plated, in accordance with ASTM B633.
5. Other Locations: Provide AISI Type 316 stainless steel anchor, complete with nut and washer, in accordance with ASTM A276 or ASTM A493.
6. Expansion anchors shall have a current ICC Evaluation Service report for use in fully-grouted concrete masonry construction when tested and assessed in accordance with ICC-ES AC01.

PART 3 EXECUTION

3.1 INSPECTION

A. Examine conditions under which materials will be installed and advise ENGINEER in writing of conditions detrimental to proper and timely completion of the Work. Do not proceed with the Work until unsatisfactory conditions are corrected.

3.2 INSTALLATION

A. Anchor Bolts:

1. Provide anchor bolts as shown or indicated or as required to secure structural element to the appropriate anchor surface.
2. Locate and accurately set anchor bolts using templates or other devices as required, prior to placing concrete. Wet setting of anchor bolts is unacceptable.
3. Protect threads and shank from damage during installation and subsequent construction operations.

B. Adhesive Anchors and Expansion Anchors – General:
   1. Prior to drilling, locate existing reinforcing steel in vicinity of proposed holes. If reinforcing conflicts with proposed hole location, obtain ENGINEER's approval of alternate hole locations to avoid drilling through or damaging existing reinforcing bars.

C. Adhesive Anchors and Epoxy Dowels:
   1. Comply with manufacturer's written installation instructions and the following.
   2. Drill holes to adhesive system manufacturer's recommended drill bit diameter to the specified depth. Core-drilled holes are unacceptable.
   3. Before setting adhesive anchor or dowel, hole shall be made free of dust and debris by method recommended by adhesive anchor system manufacturer. Hole shall be brushed with adhesive system manufacturer-approved brush and blown clean with clean, dry, oil-free compressed air to remove all dust and loose particles. Hole shall be dry as defined by adhesive system manufacturer.
   4. Before injecting adhesive, obtain ENGINEER's concurrence that hole is dry and free of oil and other contaminants.
   5. Prior to injecting adhesive into the drilled hole, dispense, to a location appropriate for such waste, an initial amount of adhesive from the mixing nozzle, until adhesive is uniform color.
   6. Inject adhesive into hole through injection system-mixing nozzle and necessary extension tubes, placed to bottom of hole. Discharge end shall be withdrawn as adhesive is placed but kept immersed to prevent formation of air pockets. Fill hole to depth that ensures that excess material is expelled from hole during anchor placement.
   7. Twist anchors or dowels during insertion into partially filled hole to guarantee full wetting of rod surface with adhesive. Insert rod slowly to avoid developing air pockets.
   8. Provide adequate curing in accordance to adhesive system manufacturer's requirements prior to continuing with adjoining Work that could place load on installed adhesive anchors or dowels.
   9. Limitations:
      a. Installation Temperature: Comply with manufacturer's instructions for installation temperature requirements. Provide temporary protection and other measures, such as heated enclosures, necessary to ensure that base material temperature complies with anchor systems manufacturer's requirements during installation and curing of adhesive anchor system.
      b. Oversized Holes: Advise ENGINEER immediately if size of drilled hole is larger than recommended by anchor system manufacturer. Cost of corrective measures, including but not limited to redesign of anchors due to decreased anchor capacities, shall be paid by CONTRACTOR.

D. Expansion Anchors:
   1. Comply with expansion anchor manufacturer's written installation instructions and the following:
   2. Drill holes using anchor system manufacturer's recommended drill bit diameter and to the specified depth. Core drilled holes are unacceptable.
   3. Before installing anchor, hole shall be made free of dust and debris by method recommended by anchor system manufacturer. Hole shall be brushed with anchor system manufacturer-approved brush and blown clean with clean, dry, oil-free compressed air to remove all dust and loose particles.
   4. Before installing anchor, obtain ENGINEER's concurrence that hole is dry and free of oil and other contaminants.
   5. Protect threads from damage during anchor installation. Drive anchors not less than four threads below surface of the attachment. Set anchors to anchor manufacturer's recommended torque using a torque wrench.

3.3 CLEANING

A. After embedding concrete is placed, remove protection and clean bolts and inserts.

END OF SECTION

SECTION 05500

MISCELLANEOUS METAL FABRICATIONS

PART 1 GENERAL

1.1 DESCRIPTION

A. Scope
   1. CONTRACTOR shall provide all labor, materials, equipment, and incidentals as shown, specified, and required to furnish miscellaneous metal fabrications including surface preparation and shop priming.
   2. Related Sections:
      a. Section 05 05 33, Anchor Systems.
      b. Section 09 91 00, Painting.

      Please note that not all related sections may be listed. CONTRACTOR is responsible for reviewing and implementing procedures in all specifications.
   3. CONTRACTOR shall be completely responsible for the proper start-up, operation, and functions of the metals fabrications herein specified. CONTRACTOR shall be responsible for coordination of all interfaces with other subcontractors to achieve the required operation.

B. Coordination:
   1. Review installation procedures under this and other Sections, and coordinate with other contractors on sequencing of related installation or work. Provide sufficient notification to OWNER and other contractors on installation that may impact OWNER operations or work conducted by other contractors.
   2. Notify other contractors in advance of the Work to provide them with sufficient time for the installation of items included in their contracts that must be installed with, or before, any metal fabrications Work

1.2 REFERENCES

A. Standards referenced in this Section are:
   1. ASTM A36/A36M, Specification for Carbon Structural Steel.
   2. ASTM A53/A53M, Specification for Pipe Steel, Black and Hot-Dipped, Zinc-Coated, Welded and Seamless.
   3. ASTM A123/A123M, Specification for Zinc (Hot Dip Galvanized) Coatings on Iron and Steel Products.
   4. ASTM A153/A153M, Specification for Zinc Coating (Hot Dip) on Iron and Steel Hardware.
   5. ASTM A384/A384M-02 Standard Practice for Safeguarding Against Warpage and Distortion During Hot-Dip Galvanizing of Steel Assemblies.
   6. ASTM A500, Specification for Cold-Formed Welded and Seamless Carbon Steel Structural Tubing in Rounds and Shapes.
   7. ASTM A572/A572M, Specification for High-Strength Low-Alloy Columbium-Vanadium Structural Steel.

8. ASTM A992/A992M, Specification for Structural Steel Shapes.
9. AWS D1.1/D1.1M, Structural Welding Code – Steel.
10. AWS D1.2/D1.2M, Structural Welding Code – Aluminum.
11. AWS D1.6, Structural Welding Code – Stainless Steel.
12. OSHA, Occupational Health and Safety Standards, 29 CFR 1910.

1.3 QUALITY ASSURANCE

A. Qualifications for Welding Work:
   1. Qualify welding processes and welding operators in accordance with AWS D1.1/D1.1M, D1.2/D1.2M, or D1.6, as applicable.
   2. When requested by ENGINEER, provide certification that all welders employed on or to be employed for the Work have satisfactorily passed AWS qualification tests within the previous 12 months. CONTRACTOR shall ensure that all certifications are kept current.

B. Regulatory Requirements:
   1. Conform to OSHA, Occupational Health and Safety Standards, 29 CFR 1910.

C. Field Measurements:
   1. Take field measurements where required prior to preparation of Shop Drawings and fabrication to ensure proper fitting of the Work.

D. Shop Assembly:
   1. Preassemble items in the shop to the greatest extent possible so as to minimize field splicing and assembly of units at the Site. Disassemble units only to the extent necessary for shipping and handling limitations. Clearly mark units for reassembly and coordinated installation.

E. Source Quality Control:
   1. Materials and fabrication procedures shall be subjected to inspection and tests in the mill, shop, and field, conducted by a qualified inspection agency. Such inspections and tests will not relieve CONTRACTOR of responsibility for providing materials and fabrication procedures in compliance with specified requirements.

F. Hot-Dip Galvanizing:
   1. Coordinate the detailing and fabrication of assemblies to be hot-dip galvanized with the steel fabricator and to minimize distortion during the galvanizing process.

1.4 SUBMITTALS

A. Action Submittals:
   1. Shop Drawings: Submit fabrication and erection details of assemblies of miscellaneous metal Work. Include plans, elevations, and details of sections and connections. Show anchorage and accessory items. Include setting drawings and templates for location and installation of miscellaneous metal items and anchorage devices.

B. Information Submittals:
   1. Mill test report that shows chemical and physical properties of each type of material, when requested by ENGINEER.
   2. Copies of welder's certifications, when requested by ENGINEER.

1.5 DELIVERY, STORAGE, AND HANDLING

A. Packing, Shipping, Handling, and Unloading:
   1. Deliver materials to the Site to ensure uninterrupted progress of the Work. Deliver anchor bolts and anchorage devices, which are to be embedded in cast-in-place concrete, in ample time to prevent delay of the Work.

B. Store all equipment in accordance with Section 01 66 00, Product Storage and Handling Requirements.

PART 2 PRODUCTS

2.1 MATERIALS

A. Steel:
   1. W-Shapes and WT-Shapes: ASTM A992/A992M.
   2. S-Shapes and Channels: ASTM A572/A572M, Grade 50.
   3. Hollow Structural Sections: ASTM A500, Grade B.
   4. Angles, Plates, Bars: ASTM A36/A36M.
   5. Steel Pipe: ASTM A53/A53M, Grade B.

B. Zinc Coated Hardware: ASTM A153/A153M.

C. Surface Preparation and Shop Priming: All steel shall be primed in the shop. Surface preparation and shop priming are included herein but are also specified in Section 09 91 00, Painting.

2.2 MISCELLANEOUS METAL ITEMS

A. Pipe Supports:
   1. Provide galvanized structural steel pipe supports as shown, unless otherwise noted.

B. Surface Preparation and Shop Priming: Miscellaneous metal fabrications shall be primed in the shop. Surface preparation and shop priming requirements are included herein but are specified in Section 09 91 00, Painting.

C. Galvanizing:
   1. Galvanizing of fabricated steel items shall comply with ASTM A123/A123M.
   2. Details of fabrication of steel items and assemblies to be hot-dip galvanized shall conform to recommendations of ASTM A384/A384M to minimize the potential for distortion.

PART 3 EXECUTION

3.1 EXAMINATION

A. Examine the conditions under which the Work is to be performed and notify ENGINEER in writing of conditions detrimental to the proper and timely completion of the Work. Do not proceed with the Work until unsatisfactory conditions have been corrected.

3.2 INSTALLATION

A. Set miscellaneous metal fabrications accurately in location, alignment, and elevation, plumb, level, true and free of rack, measured from established lines and levels. Brace temporarily or anchor temporarily in formwork where fabrications are to be built into concrete, masonry, or similar construction.

B. Anchor securely as shown and as required for the intended use, using concealed anchors where possible.

C. Fit exposed connections accurately together to form tight hairline joints. Field-weld steel connections that are not to be exposed joints but cannot be shop-welded because of shipping size limitations. Comply with AWS D1.1/D1.1M, D1.2/D1.2M, and D1.6 as applicable to the material being welded. Grind steel joints smooth and touch up shop paint coat. Do not weld, cut, or abrade surfaces of exterior units that have been hot dip galvanized after fabrication, and are intended for bolted or screwed field connections.

END OF SECTION

SECTION 06710

FIBERGLASS REINFORCED GRATING

PART 1 GENERAL

1.1 DESCRIPTION

A. Scope
1. CONTRACTOR shall provide all labor, materials, equipment, and incidentals as shown and indicated in the Contract Documents, Engineering Drawings, and Specifications to furnish, install, calibrate, test, adjust, and place into satisfactory operation all fiberglass reinforced grating shown and specified herein.
2. CONTRACTOR shall be completely responsible for the proper start-up, operation, and functions of all fiberglass reinforced grating herein specified. CONTRACTOR shall be responsible for coordination of all interfaces with other subcontractors to achieve the required operation.

B. Coordination
1. Review installation procedures under this and other Sections and coordinate with other contractor or subcontractor on sequencing of related installation or work. Provide sufficient notification to OWNER and subcontractors on installation that may impact OWNER operations or work conducted by other contractors/subcontractors.
2. Notify other contractors in advance of the installation of the fiberglass reinforced grating to provide them with sufficient time for the installation of items included in their contracts that must be installed with, or before, the fiberglass reinforced grating.

1.2 REFERENCES

A. Standards referenced in this Section are:
1. AASHTO, Standard Specifications for Highway Bridges.
2. ASTM D635, Test Method for Rate of Burning and/or Extent and Time of Burning of Plastics in a Horizontal Position.
3. ASTM E84, Test Method for Surface Burning Characteristics of Building Materials.

B. Grating spacing shall comply with OSHA Specification 1910.23.

1.3 DESIGN REQUIREMENTS

A. Grating shall be capable of carrying a concentrated load of 3,000 pounds at any point on span.

B. Grating spacing shall comply with OSHA Specification 1910.23.

1.4 SUBMITTALS

A. Action Submittals: Submit the following:
   1. Shop Drawings
      a. Layout and all critical dimensions.
      b. Installation details.
      c. Anchors and hold-downs, as required.

1.5 DELIVERY, STORAGE, AND HANDLING

A. Packing, Shipping, Handling, and Unloading.
   1. Deliver materials to the Site to ensure uninterrupted progress of the Work.

B. Store all equipment in accordance with Section 01 66 00.

PART 2 PRODUCTS

2.1 PRODUCT MANUFACTURERS

A. Strongwell, Chatfield Division, DURAGRID I-4000.

B. Or as approved.

2.2 MATERIALS

A. Grating Panels:
   1. Fabricated from bearing bars and cross rods manufactured by the pultrusion process.
   2. Glass fiber reinforcement for bearing bars shall be a core of continuous glass rovings wrapped with a continuous strand glass mat.
   3. Resin Matrix: Vinyl ester with a polyester surfacing veil wrap over the continuous strand mat. Class 1 frame spread rating of ASTM E84, and self-extinguishing requirements of ASTM D625.
   4. Cross Rods: Consist of two cross-rod spacers with notches cut into them to fit the distance between web of each bearing bar, and a bar-shaped continuous wedge section between spacers to mechanically lock cross rods to bearing bars.
   5. Top Surface: Non-skid surface of quartz grit affixed by a baked epoxy resin.
   6. Panel Thickness: 1-1/4 inches.
   7. Color: As selected.

B. Grating Frames:
   1. Fabricated by pultrusion process from same material as bearing bars.
   2. Integral concrete anchor legs.

C. Field Coating: Provide resin for recoating edges of grating cut in field.

2.3 FABRICATION

A. Join bearing bars into panels by passing continuous length cross rods through the web of each bearing bar.

B. Lock cross rods in place mechanically and with chemical bonding.

PART 3 EXECUTION

3.1 INSPECTION

A. Inspect equipment immediately upon delivery to the site. If damaged, notify ENGINEER and manufacturer at once.

3.2 INSTALLATION

A. Where grating rests on concrete, set in Fiberglass Reinforced Plastic (FRP) frames and anchor securely.

END OF SECTION

THIS PAGE INTENTIONALLY LEFT BLANK

SECTION 13122

PRE-ENGINEERED METAL BUILDING

PART 1 GENERAL

1.1 SECTION INCLUDES

A. Pre-Engineered Metal Building
   1. Structural steel frame.
   2. Complete wall and roof covering systems consisting of the exterior panels, panel attachments, insulation, sealants, mastics, trim, and flashings as required for a weather-tight assembly.
   3. Roof Accessories, including gutters and downspouts.

1.2 RELATED WORK

A. Earthwork: Section _____

B. Concrete: Section 03300

C. Anchor Systems: Section 05501

1.3 DESIGN REQUIREMENTS

A. Applicable Building Code: 2012 International Building Code as adopted by City of Phoenix.

B. Dead loads: Include the weight of all indicated permanent construction and a collateral roof dead load of 5 pounds per square foot (psf):

C. Roof Live Load: 20 psf

D. Snow Load Data:
   1. Ground Snow Load: 0 psf

E. Wind Design Data:
   1. Ultimate Wind Speed: 115 mph
   2. Risk Category: II
   3. Exposure Category: C

F. Seismic Design Data:
   1. Risk Category: II
   2. Seismic Importance Factor: 1.0
   3. Site Class: C
   4. Design Spectral Response Acceleration Parameters: Sds = .164 , Sd1=.073
   5. Seismic Design Category: B

G. Design wall and roof panel system to withstand specified loads with deflection of 1/240th of span, maximum.

H. Anchor Bolts: Furnish design criteria for anchor bolts to resist the loads induced by the design loads on the structure.

1.4 SUBMITTALS

A. Design Data: Provide detailed design criteria and calculations, including loads to foundation.

B. Certification: Manufacturer certification that the building conforms to the Contract Documents and manufacturer's standard design procedures.

C. Shop Drawings: Show building layout, primary and secondary framing member sizes and locations, cross-sections, and product and connection details.

D. Product Data: Information on manufactured products to be incorporated into the Project.

E. Color Samples: For selection of colors.

F. Anchor Bolt Installation Drawings: Layouts with bolt diameters.

G. Specimen Warranty.

1.5 QUALITY ASSURANCE

A. Design structural components, develop Shop Drawings, and perform shop Work under direct supervision of a Professional Engineer experienced in design of this Work and licensed in the State of Arizona.

B. Design data and four sets of shop drawings submitted for review shall bear the seal of a professional engineer licensed in the State of Arizona.
   1. Shop Drawings shall include dimensions and details showing the location and orientation of every shipping piece, column center lines, reference lines, anchor bolt locations and type, and base plate sizes.
   2. Drawings shall incorporate all materials and items required as well as complete instructions for all Work.

C. Qualifications:
   1. Manufacturer: Company specializing in manufacturing products specified in this Section with minimum five (5) years documented experience.
   2. Erector: Company specializing in performing Work of this Section with minimum five (5) years documented experience and approved by manufacturer.

1.6 WARRANTY

A. Provide manufacturer's standard warranty for:
   1. Panel Finish: 20 years.
   2. Weather-tightness: 10 years.

3. Materials and Workmanship: 3 years.

PART 2 PRODUCTS

2.1 METAL MATERIALS

A. Structural Steel Plate, Bar, Sheet, and Strip for Use in Bolted and Welded Constructions: ASTM A572, A1011, A529, or A36, as applicable.

B. Structural Steel Material for Secondary Structural Members: ASTM A1011, with minimum yield strength of 57,000 psi.

C. Galvanized Steel Sheet for Roof and Wall Coverings, Trim, and Flashing: ASTM A653, with minimum yield strength of 50,000 psi. Coating designation G-90.

D. Hot Rolled Steel Shapes: ASTM A36 OR A992 as applicable; with minimum yield strengths of 36 or 50 kips per square inch (ksi).

E. Structural Bolts and Nuts Used with Primary Framing: High strength, ASTM F3125 Grade A325.

F. Bolts and Nuts Used with Secondary Framing Members: ASTM F3125 Grade A325.

2.2 FRAME COMPONENTS

A. Primary Framing: Rigid Frame solid web framing consisting of tapered or uniform depth rafters rigidly connected to tapered or uniform depth columns. Provide a clear span that supports the loads at bay spacings indicated.

B. Secondary Framing: Provide girts, furring channels, angles, plates, bracing, and other secondary framing members for panel supports and anchorage.

C. Endwall Framing: Corner posts, endposts, and rake beams.

D. Purlins: Zee-shaped; depth as required; simple span or continuous span as required for design.

E. Girts: Zee- or Cee-shaped; depth as required; simple span or continuous span as required for design.

F. Wind Bracing: Portal, torsional, diagonal bracing, or diaphragm in accordance with manufacturer’s standard design practices; utilizing rods, angles, and other members, with minimum yield strengths as required for design.

G. Primary Frame Flange Bracing: Attached from purlins or girts to the primary framing, minimum yield strength as required for design.

H. Wall Panel Penetration Framing: Zee- or Cee-shaped; depth as required.

I. Sag Angles and Bridging: Steel angles, with minimum yield strength of 36,000 psi.

J. Fabrication: Fabricate according to manufacturer's standard practice.
   1. Fabricate structural members made of welded plate sections by jointing the flanges and webs by continuous automatic submerged arc welding process.
   2. All welding operators and processes shall be qualified in accordance with the American Welding Society "Structural Welding Code," AWS D1.1.
   3. Field connections. Prepare members for bolted field connections by making punched, drilled, or reamed holes in the shop.

K. Shop Coating: Finish all structural steel members using one coat of manufacturer's standard shop coat, after cleaning of oil, dirt, loose scale, and foreign matter.

L. Component Identification: Mark all fabricated parts, either individually or by lot or group, using an identification marking corresponding to the marking shown on the Shop Drawings, using a method that remains visible after shop coating.

2.3 ROOF PANEL COMPONENTS

A. 36 inches wide net coverage, with 1-3/16 inches high major ribs at 12 inches on center with minor ribs spaced between the major ribs.
   1. Material: Galvanized steel, ASTM A446, Grade D (50,000 psi yield) with G90/Z275 coating.
   2. Thickness: 24 gauge minimum.
   3. Side Laps: At least one full major rib, with a supporting member bearing edge on the lower panel and an anti-capillary groove on the upper panel.
   4. Length: Continuous from eave to ridge.
   5. The roof shall be tested and certified to meet Underwriters Laboratory Incorporated (UL) uplift rating; UL90.
   6. Finish: Kynar 500 or Hylar 5000 pre-painted finish on exterior surface, wash coat on interior surface. Color selected by OWNER from manufacturer's full line.

2.4 WALL PANEL COMPONENTS

A. 36 inches wide net coverage, with 1-3/16 inches high major ribs at 12 inches on center with minor ribs spaced between the major ribs.
   1. Material:
      a. Galvanized steel, ASTM A446
      b. The panels shall be the manufacturer's standard ribbed or corrugated configuration, which requires use of only ordinary tools of the trade for installation – no crimping or seaming machines are to be used.
   2. Thickness: 24 gauge minimum.
   3. Side Laps: At least one full major rib, with a supporting member bearing edge on the lower panel and an anti-capillary groove on the upper panel.
   4. Length: Continuous from sill to eave where possible.
   5. Endlaps, where required: 4 inches wide, located at a support member.
   6. Cut panels square at each end; provide base trim at sill.
   7. Finish: Kynar 500 or Hylar 5000 pre-painted finish on exterior surface, wash coat on interior surface. Color selected by OWNER from manufacturer's full line.

2.5 MISCELLANEOUS MATERIALS

A. Panel Fasteners.

1. For Roof Panels: Stainless steel-capped carbon steel fasteners with integral sealing washer.
2. For Wall Panels: Coated carbon steel fasteners with integral sealing washer.
3. Color of exposed fastener heads to match the wall panel finish.
4. Concealed Fasteners: Self-drilling type, of size as required.
5. Grommetted bolts shall have independent-type washer bonded to neoprene – bolt to be provided with painted head to match the panels.
6. Provide fasteners in quantities and location as required by the manufacturer.

B. Flashing and Trim: Match material and color of adjacent components (ASTM A446, 1.25 ounce coating). Provide trim at rakes, including peak and corner assemblies, high and low eaves, corners, bases, framed openings, and as required or specified to provide weather-tightness and a finished appearance.

C. Plastic Parts: Glass fiber reinforced resin or thermoformed ABS.
1. ABS: Minimum 1/8 inch thick.
2. Color: Manufacturer's standard color.

D. Sealants, Mastics, and Closures: Manufacturer's standard type.
1. Provide at roof panel endlaps, sidelaps, rake, eave, transitions, and accessories as required to provide a weather-resistant roof system; use tape mastic or gunnable sealant at sidelaps and endlaps.
2. Provide at wall panel rakes, eaves, transitions, and accessories.
3. Provide at door and louver frames, and other penetrations.
4. Closures: Formed to match panel profiles; closed cell elastic material, manufacturer's standard color.
5. Tape Mastic: Pre-formed butyl rubber-based, non-hardening, non-corrosive to metal; white or light gray.
6. Gunnable Sealant: Non-skinning synthetic elastomer,based material; gray or bronze.

E. Blanket Insulation: Glass fiber, with fully encapsulated in plastic facing:
1. Glass fiber: Odorless, neutral-colored, long filament, flexible, resilient, produced in compliance with the NAIMA 202 specifications.
2. Thermal Resistance: Well insulation: meet R=13 @ 75 degrees Fahrenheit (F) mean temperature. Ceiling insulation: meet R-11, R-19@ 75 degrees Fahrenheit (F) mean temperature.
3. Flame spread Index: 25 or less, when tested in accordance with UL 723.
4. Smoke Developed Index: 50 or less, when tested in accordance with UL 723.
5. UL Classified.
6. Facing: White vinyl scrim polyester; 0.0025-inch-thick PVC film, glass fiber scrim reinforcing, 0.0005-inch-thick polyester film; permeance 0.02 perms. Composite fiberglass and facing to meet Flame Spread of 25 or less, Smoke Developed of 50 or less, when tested in accordance with UL 723.
7. Width: As required for installation.
8. Use blanket insulation at roof and walls.
9. Roof installation: Install R-19 batts between purlins and R-11 blanket above purlins with insulation compressed between purlins and roof panels.
10. Refer to rigid insulation requirements to supplement wall insulation.

F. Board Insulation: Closed cell polyisocyanurate foam board with fiber reinforced core:
   1. Thermal Resistance: R-6.5 @ 75 degrees Fahrenheit (F)
   2. Flame Spread Index: 25 or less, when tested in accordance with UL 723.
   3. Smoke Developed Index: 50 or less, when tested in accordance with UL 723.
   4. UL Classified.
   5. Continuous Installation: Board insulation shall be installed continuously along inside face of wall and behind purlins.

2.6 WALL ACCESSORIES

A. Provide framed openings as required for doors, windows, piping, and ductwork.

2.7 ROOF ACCESSORIES

A. Eave Gutters: Roll-formed 24 gauge steel (ASTM A446, 1.25 ounce coating) sheet, with gutter straps, fasteners, and joint sealant; same color as wall panels.
   1. Downspouts: 4 x 5 inches in 10-foot lengths, with downspout elbows and downspout straps; same color as wall panels.
   2. Splash Pads: Precast concrete type at all downspouts, sloped to drain away from structure; minimum 3,000 psi at 28 days.

2.8 SERVICE DOORS

A. Description: Exterior, thermally insulated, hollow metal door and frame, SDI-100 Grade III Model 2.

B. Design: Maximum insulation U-value of 0.19 Btuh/square feet/degree F; maximum air infiltration for installed assembly of 0.40 cfm/square foot.

C. Finish: Galvanize to ASTM A653, G60; clean, phosphatize, and finish with one coat of epoxy-compatible primer; coat inside of frame profile with bituminous coating to a minimum thickness of 1/16 inch; field finish exposed surfaces with two coats of industrial grade epoxy.

D. Hardware: Meet requirements of 28 CFR Part 36.
   1. ANSI A156.1 full mortise type, heavy duty, ball bearing hinges, 4-1/2 inch, non-removable pins; single door – 1-1/2 pair.
   2. Mortise lockset, ANSI A156.13, Series 1000, Grade 1, ANSI F20 entrance function, lever handle.
   3. Aluminum threshold.
   4. BHMA 630, satin finished stainless steel except threshold.
   5. Vinyl bulb-type weatherstripping.

E. Glazing:
   1. Designed to accommodate 1/2-inch glass for exterior doors and 1/4-inch glass for interior doors.
   2. Glazing Stops: 18 gauge steel; welded corners; exterior non-removable, interior screw attached.
   3. Glass: ASTM C1036, Type 1 transparent flat, Class 1 clear, Quality q3 glazing select.

2.9 OVERHEAD DOOR

A. Description: Spring counterbalanced, insulated overhead coiling door curtain of interlocking slats designed to withstand a wind load of 20 psf of continuous length for width of door without splices. Maximum insulation U-value of 0.14 Btuh/square feet/degree F; maximum air infiltration for installed assembly of 0.40 cfm/square foot.

B. Door Curtain:
   1. Slats of structural quality cold-rolled, sheets complying with ASTM A446, Grade A, with G90 zinc coating, phosphate-treated before fabrication. Provide flat profile, with minimum 20 gauge exterior and 24 gauge back covers.
   2. Malleable iron endlocks, and windlocks (if required for width of door), galvanized after fabrication, secured to curtain slats with galvanized rivets.
   3. Bottom bar consisting of two galvanized angle extrusions, each not less than 1 inch by 1 inch by 1/8 inch thick.
   4. Helical torsion spring counterbalance mechanism, housed in a steel tube or pipe barrel, designed for standard 20,000 cycles, and adjustable by means of tension wheel.

C. Track:
   1. Curtain jamb guides fabricated of steel angles, or channels and angles with sufficient depth and strength to retain curtain loading. Build up units with minimum 3/16-inch-thick steel sections, galvanized after fabrication. Slot bolt holes for track adjustment. Secure continuous wall angle to wall framing as instructed by door manufacturer. Extend wall angles above door opening head to support coil brackets unless otherwise indicated. Provide removable stops on guides to prevent overtravel of curtain, and continuous bar for holding windlocks (if included).
   2. Cast in or cold-rolled minimum 3/16-inch stainless steel plate mounting brackets, with bell mouth guide groove for curtain.

D. Finishes: Shop-clean and prime ferrous metal and galvanized surfaces, exposed and unexposed, except faying and lubricated surfaces, with door manufacturer's standard rust-inhibitive primer.

E. Hardware:
   1. Inside center-mounted, adjustable keeper, spring-activated latch bar with feature to keep in locked or retracted position; interior handle only.
   2. 1/8-inch-thick vinyl or neoprene weather-stripping; continuous sheet secured to inside of curtain coil hood; continuous strip secured to exterior side of jamb guide.

2.10 WINDOWS

A. Glass lights in swing doors and office windows shall be 1/4-inch-thick polished wire glass, putty bedded and secured with metal stops.

B. Glass lights in exterior doors shall be 1/2-inch-thick polished wire glass, putty bedded and secured with metal stops.

PART 3 EXECUTION

3.1 EXAMINATION

A. Verify that foundations are installed correctly.

B. Verify that anchor bolts are installed as indicated on anchor bolt Shop Drawings.

3.2 ERECTION

A. Erect pre-engineered building in accordance with manufacturer's instructions, erection drawings, and other erection documents.

B. Provide temporary bracing, shoring, blocking, bridging, and securing of components as required during the erection process.

3.3 ADJUSTING

A. Overhead Door: Upon completion of installation including Work by other trades, lubricate, test, and adjust door for smooth and noiseless operation, free from warp, twist, or distortion and fitting weather-tight for entire perimeter.

3.4 CLEANING

A. Clean doors, windows and components; remove labels and visible markings.

END OF SECTION

Arcadis U.S., Inc.

410 N. 44th Street

Suite 1000

Phoenix, Arizona 85008

Tel 602 438 0883

Fax 602 438 0102

www.arcadis.com