REQUEST FOR PERMIT RENEWAL
OF AIR QUALITY CONTROL PERMIT NO. 67115

Submitted to:
Arizona Department of Environmental Quality
1110 West Washington Street
Phoenix, Arizona 85007

Submitted By:

BLT Companies, LLLP
3515 Gila Ridge Rd.
Yuma, AZ 85365

Prepared By:

28150 N. Alma School Pkwy. 103-106
Scottsdale, AZ 85262

September 2022

TABLE OF CONTENTS

1.0 INTRODUCTION 1
2.0 PROJECT DESCRIPTION 2
2.1 Hot Mix Asphalt Plant Operations 2
2.2 Crushing and Screening and Wash Plant Operations 2
2.3 Concrete Batch Plant Operations 3
2.4 Mobile Crushing and Screening Plant Operations 3
2.5 Emission Control Devices 3
3.0 EMISSION CALCULATIONS 4
3.1 Emissions Analysis 4
3.2 Impacts Analysis 5
4.0 REGULATORY APPLICABILITY 6
4.1 AAC Title 18, Chapter 2 6
4.2 40 CFR Part 60 Subpart I 6
4.3 40 CFR Part 60 Subpart OOO 7

TABLES

Table 1 Facility Wide Potential Emissions

APPENDICES

Appendix 1 Site Map
Appendix 2 Flow Diagrams and Equipment List
Appendix 3 Emission Calculations Tables

1.0 INTRODUCTION

BLT Companies, LLLP (BLT) is submitting this permit renewal application to the Arizona Department of Environmental Quality (ADEQ) for renewal of Air Quality Control Permit Number 67115. This Class II renewal permit application is being submitted for the continued operation of a hot mix asphalt plant with a collocated crushing and screening plant and a collocated concrete batch plant. This facility is located at 5401 Highway 95, Yuma AZ. The application includes updated potential to emit (PTE) calculations for permitted emissions of NO_X, CO, VOC, SO_2, PM_{10} and $PM_{2.5}$. No increases in emissions are proposed as part of this permit renewal.

This application contains the technical report, which forms the basis for this permit renewal application. Section 1.0 is the introduction. Section 2.0 provides a description of the BLT Foothills Plant processes covered under the air permit. Section 3.0 contains a summary of the PTE calculations for the project and provides an analysis of the predicted impacts resulting from the project. Section 4.0 provides a summary of regulatory applicability. The completed Standard Permit Application Form and Certification of Truth, Accuracy and Completeness is included with this submittal. A site map showing the layout of the plant is provided in Appendix 1. Flow Diagrams and equipment list of affected sources covered by the permit is provided in Appendix 2. Appendix 3 provides the PTE calculations for the project.

2.0 PROJECT DESCRIPTION

The facility operates four stationary plants and one self-propelled mobile crushing and screening plant occasionally. The stationary plants are a hot mix asphalt plant, a crushing and screening plant, a wash plant, and a concrete batch plant. The mobile crushing and screening plant is used at times for further processing at the site. A description of each process is outlined in the following sections.

2.1 Hot Mix Asphalt Plant Operations

The hot mix asphalt plant is a continuous process that heats and mixes aggregates with asphaltic oil to produce material suitable for asphalt paving. The aggregates are dried and heated in a counter flow rotary drum dryer. The heat is provided by a single burner that can use on-specification used oil or diesel fuel. The primary fuel source expected for the plant is diesel fuel, but on-spec used oil could be used in the future. The asphaltic oil is preheated in an indirect fired tank for maintaining liquid state and is pumped to the drum dryer for mixing with the hot aggregate. The exhaust of rotary drum dryer is controlled in a high temperature baghouse for minimizing the particulate emissions. The resulting asphalt mix is conveyed to storage silos from where it is discharged for off-site sales.

As part of this permit renewal BLT is seeking to add diesel fuel as an approved fuel for asphalt plant operations along with on-spec used oil. BLT is also seeking to replace the existing permitted oil heater with a replacement heater which can burn on=spec used oil or diesel. The equipment list included with the application has been updated with items in red showing the proposed changes.

2.2 Crushing and Screening and Wash Plant Operations

The crushing and screening plant uses run-of-mine rock to produce various sizes of crushed and screened product. The product is divided at the splitter box where approximately 1/3 of the product is further processed for use in the asphalt plant and for other off-site uses. The remaining material is processed through the wash plant where it emerges as a clean and sized material for use in the on-site concrete batch plant and transport to other BLT concrete batch plants off-site. The wash plant process super saturates materials to wash out fines and thus does not produce emissions. As market conditions allow, materials from both unwashed and washed product lines are sold off-site.

2.3 Concrete Batch Plant Operations

The concrete batch plant operates on demand to produce dry, transit mix concrete. Washed aggregates are fed to the system where they are metered to appropriate amounts of cement and fly ash. The dry mix is then discharged to the transit mix truck where water is added.

2.4 Mobile Crushing and Screening Plant Operations

The mobile crushing and screening plant is a track mounted, self-propelled VSI crushing unit which can be used to further process materials. This unit is stored at the Foothills facility and used for special projects but is also mobilized for use as needed for other off-site projects.

2.5 Emission Control Devices

Baghouses are used to control emissions from the rotary drum dryer, cement silos, and fly ash silos. A cyclone dust collector is used for separating fines from the intermediate product. Water trucks and/or manually operated water sprays are used to control dust on crushing and screening operations, transfer points, storage piles and unpaved roads.

3.0 EMISSION CALCULATIONS

3.1 Emissions Analysis

This section describes the calculations of potential to emit (PTE) for sources covered under the existing permit.

The operating schedule for Foothills plant sources is conservatively estimated at 8760 hours per year for purposes of calculating PTE with the exception of the hot mix asphalt plant which has an operating hours limitation of 3,416 hours per year. PTE emit for the asphalt plant SO_2 emissions vary depending on the type of fuel oil used, diesel or on-spec used oil. Emissions of SO_2 are less when burning diesel which is the preferred fuel source, however the potential to emit is based on the highest alternative operating scenario utilizing on-spec used oil. Emissions of other criteria pollutants are equivalent for either fuel type. The proposed revision incorporates a 20.4 gallon per hour oil heater which replaces the previous heater. No additional changes are proposed since the previous permit renewal. Emissions provided are based on ADEQ emissions calculations and analysis completed in support of the previous permit.

Emission calculations estimate PTE for all sources of emissions permitted at the plant. Detailed emission calculations provided by ADEQ in support of the permit are provided in Appendix 3. The following table provides the Facility Wide Potential Emissions for the Foothills Plant.

Table 1 – Facility Wide Potential Emissions

Pollutant	Potential to Emit (tpy unless otherwise noted)
PM_{10}	37.07
$PM_{2.5}$	37.07
NO_x	40.06
SO_2	39.65
CO	90.13
VOC	29.45

3.2 Impacts Analysis

BLT is seeking to renew the existing air permit and is not proposing a significant increase in emissions assessed in prior permits issued by the agency, therefore impacts from the project will not have a significant impact on air quality.

4.0 REGULATORY APPLICABILITY

4.1 AAC Title 18, Chapter 2

The proposed permit revision is not a major modification to the existing plant. No significant emissions increase is proposed as defined under R-18-2 101. As such, the requirement under A.A.C. Title 18, Chapter 2 Article 4 are not applicable.

The proposed permit renewal will not result in a modification or significant increase of any regulated HAP. As such, the requirements covered under A.A.C. Title 18, Chapter 2 Article 17 are not applicable. Portions of the A.A.C. requirements under R18-2-724, R18-2-723 and R18-2-702 are applicable for the asphalt heater, concrete batch plant and fugitive dust sources covered under this permit. A.A.C. also incorporates by reference federal New Source Performance Standards (NSPS) under R18-2-901.

The following bulleted items outline applicable requirements under the NSPS contained under 40 CFR Part 60:

- Subpart A – General Provisions
- Subpart I – Standards of Performance for Hot Mix Asphalt Facilities;
- Subpart OOO – Standards of Performance for Nonmetallic Mineral Processing Plants.

The drum dryer and associated equipment were manufactured after the NSPS trigger date and are hence subject to the requirements of NSPS as per Subpart I § 60.90 of 40 CFR 60. NSPS Standards of Performance under 40 CFR Part 60, Subpart 000 are applicable for crushing and screening operations. NSPS standards of performance for affected facilities are outlined in the following sections.

4.2 40 CFR Part 60 Subpart I

The affected facility to which the provisions of this subpart apply is each hot mix asphalt facility. Under this subpart, a hot mix asphalt facility is comprised only of any combination of the following: dryers; systems for screening, handling, storing, and weighing hot aggregate; systems for loading, transferring, and storing mineral filler, systems for mixing hot mix asphalt; and the loading, transfer, and storage systems associated with emission control systems.

The standards of performance apply to any applicable facility that commenced construction or modification after June 11, 1973. The applicable standards limit particulate matter from affected facilities to 0.04 gr/dscf and opacity to 20%.

4.3 40 CFR Part 60 Subpart OOO

The provisions of Subpart OOO are applicable to the following affected facilities in fixed (capacity over 25 tons per hour) or portable nonmetallic mineral processing plants (capacity greater than 150 tons per hour): each crusher, grinding mill, screening operation, bucket elevator, belt conveyor, bagging operation, storage bin, enclosed truck or railcar loading station. Consequently, the quarry crusher, portable crusher, screening and conveyors which process materials at the Foothills Plant are regulated under 40 CFR Part 60 Subpart OOO. The facility commenced construction after August 31, 1983 but before April 22, 2008 and is therefore subject to an opacity limit of 15% from each crushing operation and 10% from all other affected facilities.

APPENDIX 1

Site Map

Prepared For:

Prepared By:

Map Reference: Google Earth 3/23/2013

BLT COMPANIES LLLP

Class II Air Permit Renewal Application

Foothills Plant

ORIZON INDUSTRY•PEOPLE•ENVIRONMENT

Site Layout

Date: 09/15/2022

Figure: 2

APPENDIX 2

Flow Diagrams and Equipment List

BLT Companies LLLP
Material Pit
(July 2012)

N↑

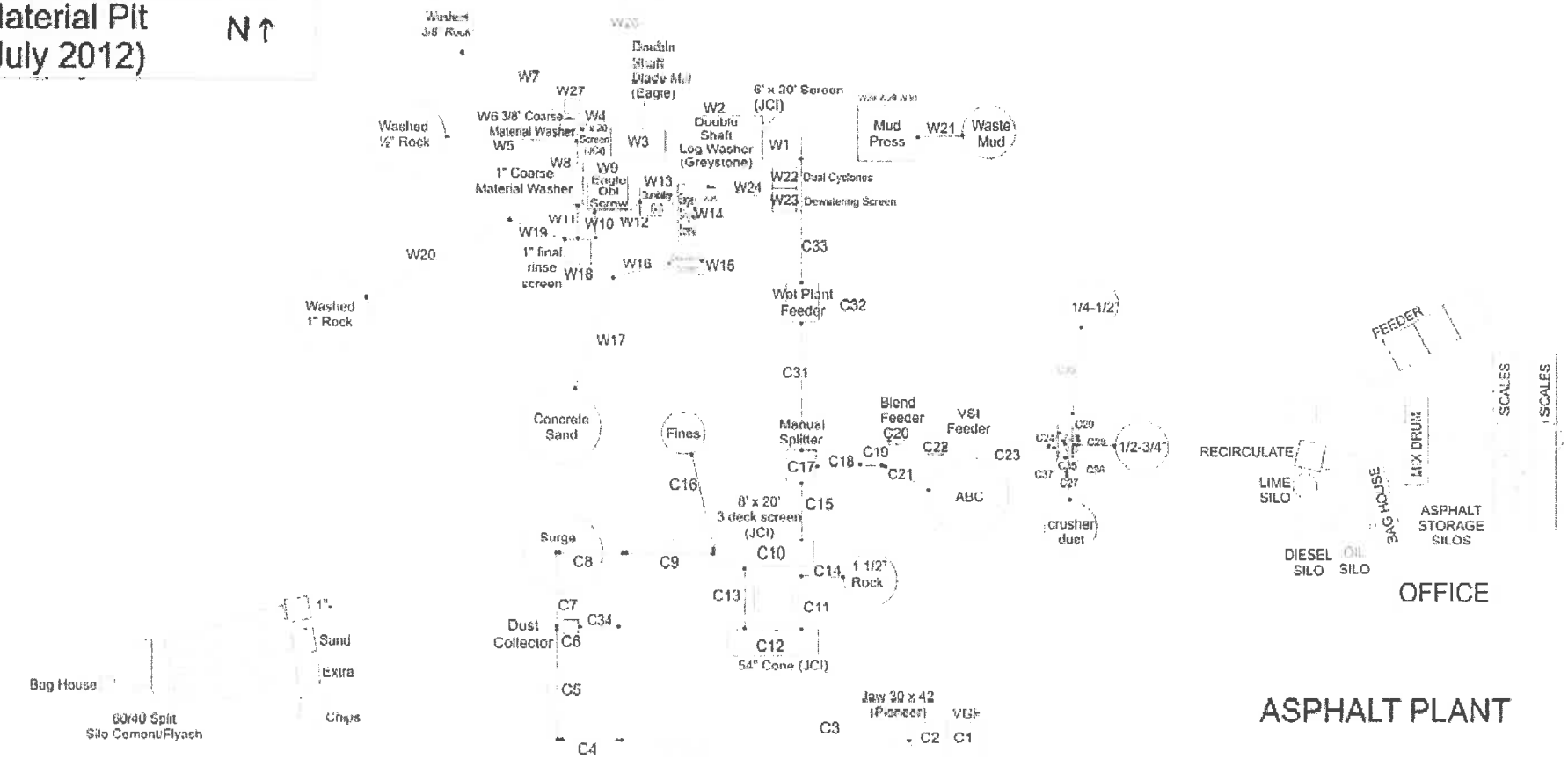

BLT

Companies, LLLP

P. O. Box 6486

Yuma, Arizona 85366

Prepared by

IMF Consulting Services, LLC

SITE PLAN

Butterfield Facility - Equipment

5401 Highway 95

Yuma, Arizona 85356

SIZE	DATE	PERMIT NUMBER(S)	REV
A	07/23/12	GP 45678 Renewal As Std Permit	1
SCALE	None	2012 BLT Pit Drwg	SHEET 5 OF 13

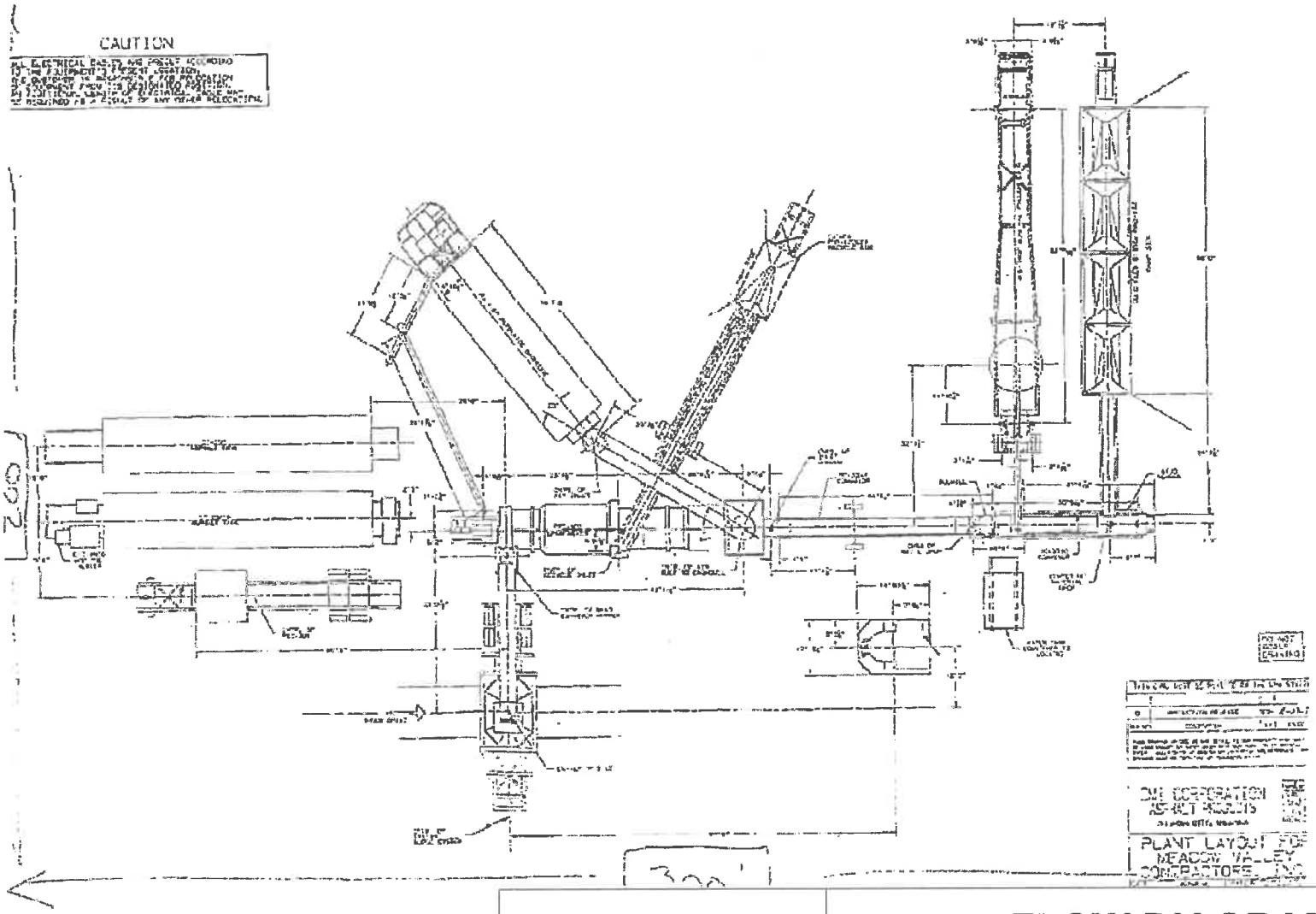

BLT

Companies, LLLP

P. O. Box 6486

Yuma, Arizona 85366

Prepared by

IMF Consulting Services, LLC

FLOW DIAGRAM

Butterfield Facility - Hot Mix Asphalt Plant

5401 Highway 95

Yuma, Arizona 85356

SIZE	DATE	PERMIT NUMBER(S)	REV
A	07/23/12	GP 45678 Renewal As Ind Permit	1
SCALE	As Noted	2012 BLT Pit Drwg	SHEET 6 OF 13

Souurce No(s).	Type of Equipment	Maximum Rated Capacity		Process	Manufacturer	Model	Serial Number	Date of Manufacture	Equipment I.D. Number
700	Feeder, 5 Bin	400.0	Ton/Hr	Dry	CMI	PAB-532	4997	1996	700
701	Feeder, RAP	400.0	Ton/Hr	Dry	CMI	PRB-120C	4997	1996	701
702	Conveyor	400.0	Ton/Hr	Dry	CMI	30" X 47'	4997	1996	702
703	Screen	400.0	Ton/Hr	Dry	CMI	2 Deck - 4' X 12'	4997	1996	703
704	Drum Mixer with Burner	400.0	Ton/Hr	HMA	CMI	PTD400	4997	1996	704
705	Baghouse	64,000	ACFM	Gases	Roto-Aire	RA-318P	4997	1996	705
706	Asphalt Silo System	400.0	Ton/Hr	HMA	CMI	Three-210 Ton Silos w/ Conveyors & Scale	4997	1996	706
709	A/C Tank w/ oil heater	20.0	Ton/Hr	Oil	CMI	30,000 Gal w/ 1.75 Gal/Hr Burner (Nom)	4997	1996	709
710	A/C Tank			Oil	CMI	20,000 Gal	4997	1996	710
711	Lime silo w/ Pugmill	5.0	Ton/Hr	Dry	CMI	75 BBL	4997	1996	711

BLT

Companies, LLLP

P. O. Box 6486

Yuma, Arizona 85366

Prepared by

IMF Consulting Services, LLC

EQUIPMENT LIST

Butterfield Facility - Hot Mix Asphalt Plant

5401 Highway 95

Yuma, Arizona 85356

SIZE	DATE	PERMIT NUMBER(S)	REV
A	07/23/12	*GP 45678 Renewal As Ind Permit*	1
SCALE	None	2012 BLT Pit Drwg	SHEET 7 OF 13

Equipment No(s).	Type of Equipment	Maximum Capacity As Rated	Maximum Capacity As Configured	Process	Manufacturer	Model	Serial Number	Date of Manufacture
C1	VGF FEEDER	600.0 TON/HR	325.0 TON/HR	DRY	CEDAR RAPIDS	35" WIDE X 20' LONG	40776	5/1/2000
C2	CRUSHER JAW	300.0 TON/HR	325.0 TON/HR	DRY	PIONEER	30" X 42" JAW	UH3934	5/15/2001
C3	CONVEYOR	300.0 TON/HR	325.0 TON/HR	DRY	HUNTINGTON	36" X 800'	HNE 1215	8/15/2001
C4	CONVEYOR	300.0 TON/HR	325.0 TON/HR	DRY	HUNTINGTON	36" X 60'	3030-08803-1	8/15/2001
C5	CONVEYOR	300.0 TON/HR	325.0 TON/HR	DRY	HUNTINGTON	36" X 470'	HNE1216	8/15/2001
C6	DUST COLLECTOR	100.0 TON/HR	5.0 TON/HR	DRY	HUNTINGTON	CYCLONE DUST COLLECTOR	HNE1217	8/15/2001
C7	STACKER	300.0 TON/HR	320.0 TON/HR	DRY	HUNTINGTON	36" X 120'	HNE1211	8/15/2001
C8	CONVEYOR	300.0 TON/HR	320.0 TON/HR	DRY	HUNTINGTON	36" X 100'	HNE1218	8/15/2001
C9	CONVEYOR	300.0 TON/HR	320.0 TON/HR	DRY	HUNTINGTON	36" X 70'	HNE1219	8/15/2001
C10	SCREEN	300.0 TON/HR	385.0 TON/HR	DRY	JCI	8' X 20' TRIPLE DECK SCREEN	7203-38LP	5/1/2000
C11	CONVEYOR	300.0 TON/HR	375.0 TON/HR	DRY	HUNTINGTON	36" X 60'	HNE1214	8/15/2001
C12	CONE CRUSHER	300.0 TON/HR	375.0 TON/HR	DRY	JCI	54" JCI KODIAK CRUSHER	02C02EK400	5/1/2000
C13	CONVEYOR	300.0 TON/HR	375.0 TON/HR	DRY	HUNTINGTON	36" X 60'	HNE1201	8/15/2001
C14	CONVEYOR	300.0 TON/HR	10.0 TON/HR	DRY	HUNTINGTON	36" X 60' BANANA BELT	HNE1202	5/1/2003
C15	CONVEYOR	300.0 TON/HR	300.0 TON/HR	DRY	HUNTINGTON	36" X 70'	HNE1210	5/1/2000
C16	STACKER	300.0 TON/HR	3.0 TON/HR	DRY	HUNTINGTON	36" X 80'	HNE1208	5/1/2001
C17	SPLITTER BOX	300.0 TON/HR	300.0 TON/HR	DRY	BLT	HAND OPERATED DIVERTION BOX	BLT100	6/26/2005
C18	CONVEYOR	300.0 TON/HR	100.0 TON/HR	DRY	HUNTINGTON	36" X 100'	HNE1204	5/1/2000
C19	CONVEYOR	300.0 TON/HR	- TON/HR	DRY	HUNTINGTON	36" X 60'	HNE1220	8/15/2001
C20	BLEND FEEDER	300.0 TON/HR	- TON/HR	DRY	HUNTINGTON	36" BLEND FEEDER	HEN1221	8/15/2001
C21	STACKER	300.0 TON/HR	100.0 TON/HR	DRY	HUNTINGTON	36" X 120'	HNE1212	5/1/2000
C22	FEEDER VSI	300.0 TON/HR	100.0 TON/HR	DRY	HUNTINGTON	36" VSI FEEDER	HNE1223	8/15/2001
C23	CONVEYOR	300.0 TON/HR	100.0 TON/HR	DRY	HUNTINGTON	36" X 360' OVERHEAD	HNE1224	8/15/2001
C24	CONVEYOR	250.0 TON/HR	TON/HR	DRY	HUNTINGTON	30" X 60' RETURN	HNE1225	8/15/2001
C25	CONVEYOR	250.0 TON/HR	TON/HR	DRY	HUNTINGTON	30" X 10' TRANSFER	HNE1226	8/15/2001
C26	CONVEYOR	250.0 TON/HR	TON/HR	DRY	HUNTINGTON	30" X 15' TRANSFER	HNE1227	8/15/2001
C27	STACKER	250.0 TON/HR	4.0 TON/HR	DRY	HUNTINGTON	30" X 60'	HNE1228	8/15/2001
C28	STACKER	250.0 TON/HR	46.0 TON/HR	DRY	HUNTINGTON	30" X 60'	HNE1229	8/15/2001
C29	CONVEYOR	250.0 TON/HR	48.0 TON/HR	DRY	HUNTINGTON	30" X 60'	HNE1230	8/15/2001
C30	STACKER	250.0 TON/HR	48.0 TON/HR	DRY	HUNTINGTON	30" X 60'	HNE1231	8/15/2001
C31	CONVEYOR	300.0 TON/HR	200.0 TON/HR	DRY	HUNTINGTON	36" X 275' OVERHEAD	HNE1232	8/15/2001
C32	FEEDER WET PLT	400.0 TON/HR	200.0 TON/HR	DRY	CEDAR RAPIDS	36" WET PLANT FEEDER	40776	8/15/2001
C33	CONVEYOR	300.0 TON/HR	200.0 TON/HR	DRY	HUNTINGTON	36" X 150' WET PLANT FEED	HNE1233	8/15/2001
C34	CONVEYOR	75.0 TON/HR	TON/HR	DRY	HUNTINGTON	24" X 40'	HNE1234	8/15/2001
C35	CONVEYOR	250.0 TON/HR	4.0 TON/HR	DRY	HUNTINGTON	30" X 60'	HNE1235	8/15/2001
C36	VSI	275.0 TON/HR	275.0 TON/HR	DRY	ISC	ISC 77	77-156	5/1/2000
C37	SCREEN	275.0 TON/HR	275.0 TON/HR	DRY	ISC	6' X 16' TRIPLE DECK SCREEN	77-157	5/1/2000

BLT

Companies, LLLP

P. O. Box 6486

Yuma, Arizona 85366

Prepared by

IMF Consulting Services, LLC

EQUIPMENT LIST

Butterfield Facility - Crushing And Screening Plant

5401 Highway 95

Yuma, Arizona 85356

SIZE	DATE	PERMIT NUMBER(S)	REV
A	07/23/12	GP 45678 Renewal As Ind Permit	1
SCALE None		2012 BLT Pit Drwg	SHEET 8 OF 13

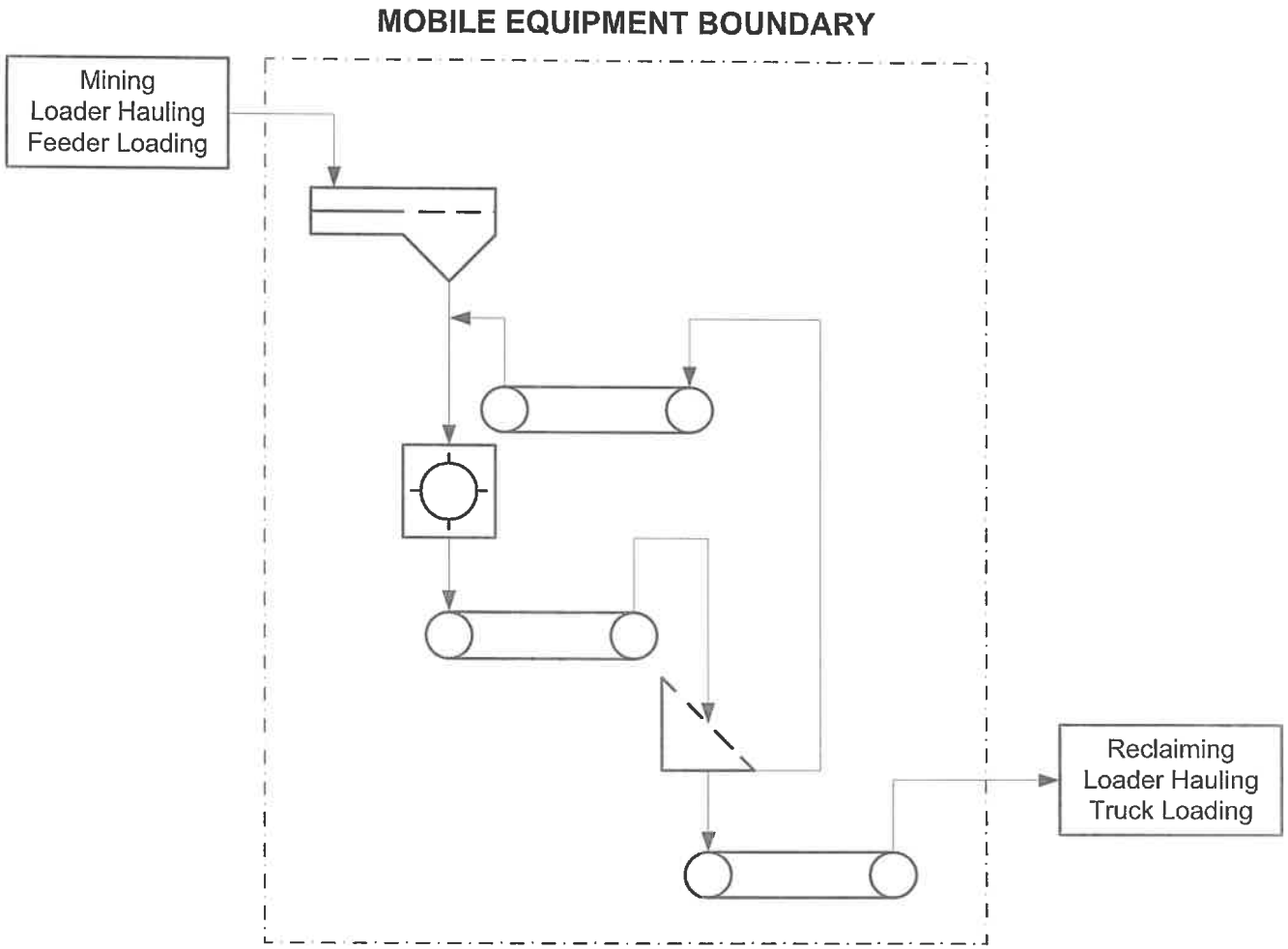

Mobile crushing plant is a unitized, self-propelled plant utilizing a diesel/hydraulic power source for propulsion and operation.

BLT

Companies, LLLP
P. O. Box 6486
Yuma, Arizona 85366

Prepared by
IMF Consulting Services, LLC

FLOW DIAGRAM

Butterfield Facility – Mobile Crushing Plant
5401 Highway 95
Yuma, Arizona 85356

SIZE	DATE	PERMIT NUMBER(S)	REV
A	07/23/12	GP 45678 Renewal As Ind Permit	1
SCALE	None	2012 BLT Pit Drwg	SHEET 9 OF 13

UNITIZED, SELF-PROPELLED CRUSHING AND SCREENING PLANT (MOBILE PLANT)

Equipment No(s).	Type of Equipment	Maximum Capacity		Process	Manufacturer	Model	Serial Number	Date of Manufacture
		As Rated	As Configured					
406969	VGF FEED	250.0 TON/HR	250.0 TON/HR	DRY	KPI	50" WIDE X 15' LONG	406969	2006
	IMPACT CRUSHER	250.0 TON/HR	250.0 TON/HR	DRY	JCI	4250		
	SCREEN	250.0 TON/HR	250.0 TON/HR	DRY	KOLBERG	5' X 12' SINGLE DECK SCREEN	406972	
	RETURN CONVEYOR	250.0 TON/HR	375.0 TON/HR	DRY	KPI	18" WIDE BELT		
	CRUSHER CONVEYOR	250.0 TON/HR	375.0 TON/HR	DRY	KPI	24" WIDE X 11' LONG BELT		
	UNDER SCREEN CONVEYOR / STACKER	250.0 TON/HR	10.0 TON/HR	DRY	KPI	48" WIDE X 40' LONG BELT		
	DIESEL HYDRAULIC DRIVE	400.0 HP	400.0 HP	N.A.	CUMMINS	QSM11-C	31000886	

BLT

Companies, LLC

P. O. Box 6486

Yuma, Arizona 85366

Prepared by

IMF Consulting Services, LLC

EQUIPMENT LIST

Butterfield Facility – Mobile Crushing Plant

Butterfield Road at U.S. Highway 95

Yuma, Arizona

SIZE	DATE	PERMIT NUMBER(S)	REV
A	07/23/12	GP 45678 Renewal As Ind Permit	1
SCALE	None	2012 BLT Pit Drwg	SHEET 10 OF 13

Equipment No(s).	Type of Equipment	Maximum Rated Capacity		Process	Manufacturer	Model	Serial Number	Date of Manufacture
W1	SCREEN	300	TON/HR	WET	JCI	6 X 20 TRIPLE DECK WASH SCREEN	JCI 1001	
W2	LOG WASHER	300	TON/HR	WET	GREYSTONE	35' DOUBLE LOG WASHER	LW46T1003137756S	2/1/2002
W3	BLADE MILL	300	TON/HR	WET	EAGLE	36" X 18' DOUBLE AUGER	16613	8/15/2001
W4	SCREEN	300	TON/HR	WET	JCI	6 X 20 TRIPLE DECK WASH SCREEN	JCI1002	8/15/2001
W5	CONVEYOR	250	TON/HR	WET	REUTER	30" X 100'	REU101	8/15/2001
W6	3/8" WASHER	250	TON/HR	WET	KOLBERG	18" X 15' SINGLE	403240	8/15/2001
W7	CONVEYOR	250	TON/HR	WET	REUTER	30" X 100'	REU102	8/15/2001
W8	1" WASHER	250	TON/HR	WET	EAGLE	36" X 18' SINGLE	16612	8/15/2001
W9	DOUBLE SCREW	250	TON/HR	WET	EAGLE	44" X 32' DOUBLE SCREW	16137	8/15/2001
W10	CONVEYOR	250	TON/HR	WET	REUTER	30" X 20'	REU103	8/15/2001
W11	CONVEYOR	250	TON/HR	WET	REUTER	30" X 20'	REU104	8/15/2001
W12	CONVEYOR	250	TON/HR	WET	REUTER	30" X 20'	REU105	8/15/2001
W13	DURABILITY CELL	100	TON/HR	WET	AZFAB	24" SINGLE RUBBER	DACC008-08003	2/1/2002
W14	SINGLE SCREW	200	TON/HR	WET	EAGLE	44" X 32' SINGLE SCREW	16590	8/15/2001
W15	DEWATERING SC	100	TON/HR	WET	AZFAB	15' X 5' SCREEN	AZ101	8/15/2001
W16	CONVEYOR	250	TON/HR	WET	REUTER	30" X 60'	REU106	8/15/2001
W17	STACKER	250	TON/HR	WET	SUPERIOR	30" X 80'	SUP101	8/15/2001
W18	1" FINAL RINSE	100	TON/HR	WET	KOLBERG	5' X 10' SINGLE SCREEN	404356	2/1/2005
W19	CONVEYOR	250	TON/HR	WET	REUTER	30" X 20'	REU107	8/15/2001
W20	CONVEYOR	250	TON/HR	WET	REUTER	30" X 100'	REU108	8/15/2001
W21	STACKER	125	TON/HR	WET	AZFAB	24" X 60'	AZ102	8/15/2001
W22	CYCLONES	75	TON/HR	WET	AZFAB	DUAL CYCLONES	AZ103	8/15/2001
W23	DEWATERING SC	75	TON/HR	WET	AZFAB	5' X 5'	AZ104	8/15/2001
W24	CONVEYOR	125	TON/HR	WET	REUTER	24" X 70'	REU109	8/15/2001
W25	CONVEYOR	125	TON/HR	WET	REUTER	24" X 40'	REU110	8/15/2001
W26	THICKNER TANKS	125	TON/HR	WET	AZFAB	WATER RECOVERY THICKNER TANK	THK0060503	2/1/2002
W27	STICK SCREEN	10	TON/HR	WET	AZFAB	STICK SCREEN 4'-4'	DW50070503	2/1/2002
W28	BELT PRESS	25	TON/HR	WET	ASI	BELT PRESS 2 1/12 METER	ASI201	2/1/2005
W29	BELT PRESS	25	TON/HR	WET	ASI	BELT PRESS 2 1/12 METER	ASI202	2/1/2005
W30	BELT PRESS	25	TON/HR	WET	ASI	BELT PRESS 2 1/12 METER	ASI203	2/1/2005

NOT REGULATED - INCLUDED FOR CLAIRITY ONLY

BLT

Companies, LLLP
P. O. Box 6486
Yuma, Arizona 85366

Prepared by
IMF Consulting Services, LLC

EQUIPMENT LIST

Butterfield Facility - Wash Plant
5401 Highway 95
Yuma, Arizona 85356

SIZE	DATE	PERMIT NUMBER(S)	REV
A	07/23/12	GP 45678 Renewal As Ind Permit	1
SCALE	None	2012 BLT Pit Drwg	SHEET 11 OF 13

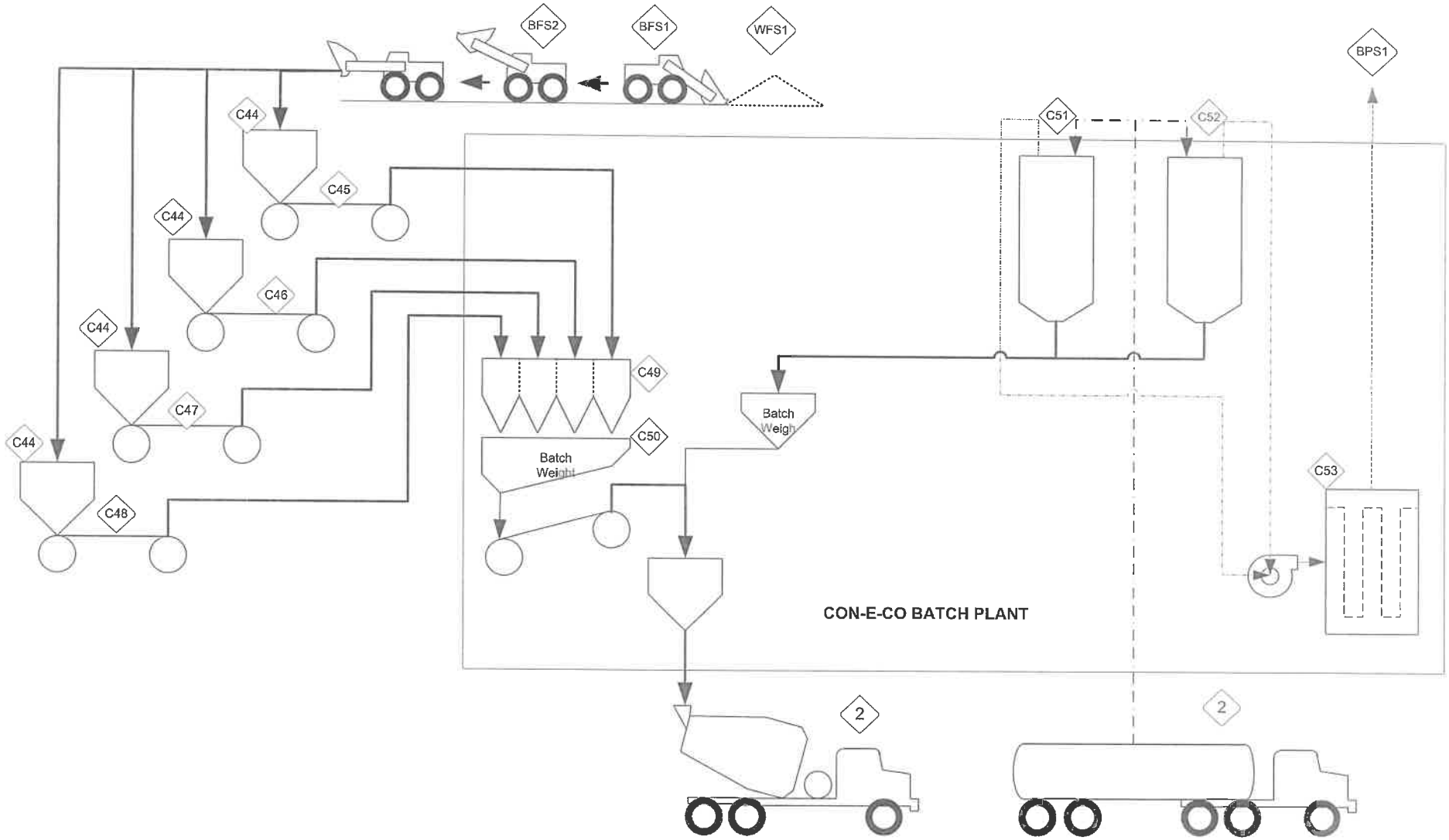

BLT

Companies, LLLP
P. O. Box 6486
Yuma, Arizona 85366

Prepared by
IMF Consulting Services, LLC

FLOW DIAGRAM

Butterfield Facility - Concrete Batch Plant
5401 Highway 95
Yuma, Arizona 85356

SIZE	DATE	PERMIT NUMBER(S)	REV
A	07/23/12	GP 45678 Renewal As Ind Permit	1
SCALE	None	2012 BLT Pit Drwg	SHEET 12 OF 13

Souurce No(s).	Type of Equipment	Maximum Rated Capacity	Process	Manufacturer	Model	Serial Number	Date of Manufacture	Equipment I.D. Number
C44	Aggregate Feed Bins	20.0 Cu Yd/Hr	Dry	Con-E-Co	4 Compartment, 48 Cu. Yd Total Capacity	To Be Determined	2006	C44
C45	Conveyor	20.0 Cu Yd/Hr	Dry	Con-E-Co	30" Belt	To Be Determined	2006	C45
C46	Conveyor	20.0 Cu Yd/Hr	Dry	Con-E-Co	30" Belt	To Be Determined	2006	C46
C47	Conveyor	20.0 Cu Yd/Hr	Dry	Con-E-Co	30" Belt	To Be Determined	2006	C47
C48	Conveyor	20.0 Cu Yd/Hr	Dry	Con-E-Co	30" Belt	To Be Determined	2006	C48
C49	Elevated Aggregate Storage Bin	20.0 Cu Yd/Hr	Dry	Con-E-Co	4 Compartment, 99 Cu. Yd. Total Capacity	To Be Determined	2006	C49
C50	Aggregate Batcher	20.0 Cu Yd/Hr	Dry	Con-E-Co	12 Cu. Yd. Capacity	To Be Determined	2006	C50
C51	Cement Silos	20.0 Cu Yd/Hr	Dry	Con-E-Co	2 Compartment, 2044 BBL Total Capacity, 60/40 Split	To Be Determined	2006	C51
C54	Flyash Silos	20 Cu Yd/Hr	Dry	Con-E-Co	2 Compartment, 2044 BBL Total Capacity, 60/40 Split	To Be Determined	2006	C54
C56	Silo Dust Control System	250 ACFM	Dry	Con-E-Co	Model MBV-4 Fabric Filter	To Be Determined	2006	C56
C57	Mixer Charging Conveyor	20.0 Cu Yd/Hr	Dry	Con-E-Co	36" Belt	To Be Determined	2006	C57
C58	Mixer Dust Control System	8,000 ACFM	Dry	Con-E-Co	Model ELPC 8000 Fabric Filter	To Be Determined	2006	C58

BLT

Companies, LLLP
P. O. Box 6486
Yuma, Arizona 85366

Prepared by
IMF Consulting Services, LLC

EQUIPMENT LIST

Butterfield Facility - Concrete Batch Plant
5401 Highway 95
Yuma, Arizona 85356

SIZE	DATE	PERMIT NUMBER(S)	REV
A	07/23/12	GP 45678 Renewal As Ind Permit	1
SCALE	None	2012 BLT Pit Drwg	SHEET 13 OF 13

EQUIPMENT LIST

Equipment Name	*Capacity*	*Make*	*Model*	*Equipment ID No.*	*Serial No.*	*Year of Ma1lufacture*	*Subject to NSPS*
Hot Mix Asphalt Plant							
Feeder, 5 Bin	400TPH	CMI	PAB-532	700	4997	1996	Subpart I
Feeder, RAP	400TPH	CMI	PRB-120C	701	4997	1996	Subpart I
Conveyor	400TPH	CMI	30"x 47'	702	4997	1996	Subpart I
Screen	400TPH	CMI	2 Deck-4'x12'	703	4997	1996	Subpart I
Drum Mixer with Burner	400 TPH	CMI	PTD400	704	4997	1996	Subpart I
Baghouse	64,000ACFM	Roto-Aire	RA-318P	705	4997	1996	Subpart I
Asphalt Silo System	400 TPH	CMI	Three-210 Ton Silo w/Conveyors artd Scale	706	4997	1996	Subpart I
A/C Tank ~~w/ oil heater~~	20TPH	CMI	30,000 Gal ~~w/ 1.75 gal/hr burner (nom)~~	709	4997	1996	Subpart I
A/C Oil Heater	20.4 GPH	CEI	CEI-2400-C	709R	C18-019	2008	Subpart I
A/C Tank	20TPH	CMI	20,000 Gal	710	4997	1996	Subpart I
Lime Silo w/ Pug Mill	5 TPH	CMI	75BBL	711	4997	1996	Subpart I

Equipment Name	*Capacity*	*Make*	*Model*	*Equipment ID No.*	*Serial No.*	*Year of Manufacture*	*Subject to NSPS*
Crushing & Screening Plant							
VGF Feeder	600TPH	Cedar Rapids	35" **W x** 20' L	Cl	40076	2000	Subpart 000
Jaw Crusher	325 TPH	Pioneer	30" x 42" Jaw	C2	UH3934	2001	Subpart 000
Conveyor	325 TPH	Huntington	36" X 800'	C3	HNE 1215	2001	Subpart 000
Conveyor	325 TPH	Huntington	36" x 60'	C4	3030-08803-1	2001	Subpart 000
Conveyor	325 TPH	Huntington	36" x 470'	C5	HNE 1216	2001	Subpart 000
Dust Collector	5TPH	Huntington	Cyclone Dust Collector	C6	HNE 1217	2001	Subpart 000
Stacker	320 TPH	Huntington	36" x 120'	C7	HNE 1211	2001	Subpart 000
Conveyor	320TPH	Huntington	36" X 100'	C8	HNE 1218	2001	Subpart 000
Conveyor	320 TPH	Huntington	36" x 70'	C9	HNE 1219	2001	Subpart 000
Screen	385 TPH	JCI	8" x 20' Triple Deck	Cl0	7203-38LP	2000	Subpart 000
Conveyor	375 TPH	Huntington	36" x 60'	C11	HNE 1214	2001	Subpart 000
Cone Crusher	375 TPH	JCI	54" JCI Kodiak Crusher	C12	02C02EK400	2000	Subpart 000
Conveyor	375 TPH	Huntington	36" x 60'	C13	HNE 1201	2001	Subpart 000
Conveyor	l0TPH	Huntington	36" x 60' Banana Belt	C14	HNE 1202	2001	Subpart 000
	320 TPH	Huntington	36" x 70'	C15	HNE 1210	2001	Subpart 000

Equipment Name	*Capacity*	*Make*	*Model*	*Equipment ID No.*	*Serial No.*	*Year of Manufacture*	*Subject to NSPS*
Conveyor							
Stacker	3TPH	Huntington	36" **x 80'**	C16	HNE 1208	2001	Subpart 000
Splitter Box	320TPH	BLT	Hand Operated Diversion Box	C17	BLTlO0	2005	Subpart 000
Conveyor	100 TPH	Huntington	36" x 100'	C18	HNE 1204	2001	Subpart 000
Conveyor	???? TPH	Huntington	36" x 60'	C19	HNE 1220	2001	Subpart 000
Blend Feeder	???? TPH	Huntington	36" Blend Feeder	C20	HNE 1221	2001	Subpart 000
Stacker	100 TPH	Huntington	36" **x 120'**	C21	HNE 1212	2001	Subpart 000
Feeder VSI	100 TPH	Huntington	36" VSI Feeder	C22	HNE 1223	2001	Subpart 000
Conveyor	100 TPH	Huntington	36" x 360' Overhead	C23	HNE 1224	2001	Subpart 000
Conveyor	??? TPH	Huntington	36" x 60' Return	C24	HNE 1225	2001	Subpart 000
Conveyor	??? TPH	Huntington	36" x 10' Transfer	C25	HNE 1226	2001	Subpart 000
Conveyor	???TPH	Huntington	36" x 15' Transfer	C26	HNE 1227	2001	Subpart 000
Stacker	4TPH	Huntington	36" x 60'	C27	HNE 1228	2001	Subpart 000
Stacker	46TPH	Huntington	36" x 120'	C28	HNE 1229	2001	Subpart 000
Conveyor	48TPH	Huntington	36" x 60'	C29	HNE 1230	2001	Subpart 000
Stacker	48TPH	Huntington	36" x 60'	C30	HNE 1231	2001	Subpart 000

Equipment Name	*Capacity*	*Make*	*Model*	*Equipment ID No.*	*Serial No.*	*Year of Manufacture*	*Subject to NSPS*
Conveyor	200TPH	Huntington	36" x 275' Overhead	C31	HNE 1232	2001	Subpart 000
Feeder Belt PLT	200 TPH	Cedar Rapids	36" Wet Plant Feeder	C32	40776	2001	Subpart 000
Conveyor	200 TPH	Huntington	36" x 150' Wet Plant Feeder	C33	HNE 1233	2001	Subpart 000
Conveyor	??? TPH	Huntington	24" x 40'	C34	HNE 1234	2001	Subpart 000
Conveyor	4TPH	Huntington	36" x 60'	C35	HNE 1235	2001	Subpart 000
VSI	275 **TPH**	ISC	ISC77	C36	77-156	2001	Subpart 000
Screen	275 TPH	ISC	6' x 16' Triple Deck Screen	C37	77-157	2001	Subpart 000
Unitized, Self Propelled Crushing & Screening Mobile Plant							
VGS Feed	250 TPH	KPI	50"Wx15'L	406969	406969	2006	Subpart 000
Impact crusher	250TPH	JCI	4250	406969	406969	2006	Subpart 000
Screen	250TPH	Kolberg	4250	406969	406972	2006	Subpart 000
Return Conveyor	375 TPH	KPI	18" Wide Belt	406969	406972	2006	Subpart 000
Crusher Conveyor	375 TPH	KPI	24" x 11'	406969	406972	2006	Subpart 000
Under Screen Conveyor/ Stacker	lOTPH	KPI	48" x 40'	406969	406972	2006	Subpart 000

Equipment Name	*Capacity*	*Make*	*Model*	*Equipment ID No.*	*Serial No.*	*Year of Manufacture*	*Subject to NSPS*
Diesel Hydraulic Drive	400HP	Cummins	QSMl 1-C	406969	31000886	2006	No
Wash Plant							
Screen	300 TPH	JCI	6 x 20 Triple Deck Wash Screen	Wl	JCI 1001	NA	No
Log Washer	300 TPH	Greystone	35' Double Log Washer	W2	LW46T10031377 56S	2002	No
Blade Mill	300 TPH	Eagle	36" x 18' Double Auger	W3	16613	2001	No
Screen	300TPH	JCI	6 x 20 Triple Deck Wash Screen	W4	JCI1002	2001	No
Conveyor	250TPH	Reuter	30" x 100'	W5	REUlOl	2001	No
3/8" Washer	250 TPH	Kolberg	18' x 15' Single	W6	403240	NA	No
Conveyor	250 TPH	Reuter	30" x 100'	W7	REU102	2001	No
1" Washer	250 TPH	Eagle	36" x .18' Single	W8	16612	2001	No
Double Screw	250TPH	Eagle	44" x 32' Double Screw	W9	16137	2001	No
Conveyor	250TPH	Reuter	30" x 20'	Wl0	REU103	2001	No
Conveyor	250TPH	Reuter	30" x 20'	Wll	REU104	2001	No
Conveyor	250TPH	Reuter	30" x 20'	W12	REU105	2001	No

Equipment Name	*Capacity*	*Make*	*Model*	*Equipment ID No.*	*Serial No.*	*Year of Manufacture*	*Subject to NSPS*
Durability Cell	100 TPH	AZFAB	24" Single Rubber	W13	DACC008-08003	2002	No
Single Screw	200TPH	Eagle	44" x 32' Single Screw	W14	16590	2001	No
Dewatering Screen	100 TPH	AZFAB	15' x 5' Screen	W15	AZ101	2001	No
Conveyor	250 TPH	Reuter	30" x 60'	Wl6	REU106	2001	No
Stacker	250 TPH	Superior	30" x 80'	Wl7	SUP101	2001	No
1" Final Rinse	100 TPH	Kolberg	5' x 10' Single Screen	W18	404356	2005	No
Conveyor	250TPH	Reuter	30" x 20'	W19	REU107	2001	No
Conveyor	250TPH	Reuter	30" x 100'	W20	REU108	2001	No
Stacker	125 TPH	AZFAB	24" x 60'	W21	AZ102	2001	No
Cyclones	75 TPH	AZFAB	Dual Cyclones	W22	AZ103	2001	No
Dewatering Screen	75 TPH	AZFAB	5' x 5'	W23	AZ104	2001	No
Conveyor	125 TPH	Reuter	24" x 70'	W24	REU109	2001	No
Conveyor	125 TPH	Reuter	24" x 40'	W25	REUl10	2001	No
Thickner Tanks	125 TPH	AZFAB	Water Recovery Thickner Tank	W26	THK0060503	2002	No
Stick Screen	125 TPH	AZFAB	4' x 4 Stick Screen'	W27	DW50070503	2002	No

Equipment Name	*Capacity*	*Make*	*Model*	*Equipment ID No.*	*Serial No.*	*Year of Manufacture*	*Subject to NSPS*
Belt Press	25 TPH	ASI	Belt Press 2 ½ Meter	W28	AS1201	2005	No
Belt Press	25 TPH	ASI	Belt Press 2 ½ Meter	W29	AS1202	2005	No
Belt Press	25 TPH	ASI	Belt Press 2 ½ Meter	W30	AS1203	2005	No
Concrete Batch Plant							
Aggregate Feed Bins	48 cu.yds; 20 cu.yds./hr	Con-E-Co	4 Compartment	C44	TBD	2006	No
Conveyor	20 cu.yds./hr	Con-E-Co	30" Belt	C45	TBD	2006	No
Conveyor	20 cu.yds./hr	Con-E-Co	30" Belt	C46	TBD	2006	No
Conveyor	20 cu.yds./hr	Con-E-Co	30" Belt	C47	TBD	2006	No
Conveyor	20 cu.yds./hr	Con-E-Co	30" Belt	C48	TBD	2006	No
Elevated Aggregate Storage Bin	99 cu.yds; 20 cu.yds./hr	Con-E-Co	4 Compartment	C49	TBD	2006	No
Aggregate Batcher	12 cu.yds; 20 cu.yds./hr	Con-E-Co	12 cu.yds;	C50	TBD	2006	No
Cement Silo	2044 BBL 20 cu.vds./hr	Con-E-Co	2 Compartment 60/40 Split	C51	TBD	2006	No

Equipment Name	*Capacity*	*Make*	*Model*	*Equipment ID No.*	*Serial No.*	*Year of Manufacture*	*Subject to NSPS*
Fly Ash Silo	2044 BBL20 cu.yds./hr	Con-E-Co	2 Compartment 60/40 Split	C54	TBD	2006	No
Silo Dust Control System	250ACFM	Con-E-Co	MBV-4 Fabric Filter	C56	TBD	2006	No
Mixer Charging Conveyor	250 cu.yds./hr	Con-E-Co	36" Belt	C57	TBD	2006	No
Mixer Dust Control System	8,000ACFM	Con-E-Co	ELPC 8000 Fabric Filter	C58	TBD	2006	No

APPENDIX 3

Emission Calculation Tables

Name of Permittee:								Date:		7-Mar-13		
General Permit #								Reviewed By:				
	Rated Capacity	Units	Pollutant	Emission Factor (lbs/ton of asphalt)			PM	PM_{10}	CO	NO_x	SO_2	VOCs
Hot Mix Aspahlt Operations				Bag Filter	V. Scrubber		lbs/hr	lbs/hr	lbs/hr	lbs/hr	lbs/hr	lbs/hr
Drum Mix	400	tons/hr	PM	0.033	0.045		13.200					
Control Used: (click on cell to select)			PM_{10}	0.023	0.019			9.200				
Baghouse				Fuel Oil #2 / Diesel	Waste Oil/ Fuel Oil #6	Natural Gas						
				lbs/ton	lbs/ton	lbs/ton						
Fuel Used: (click on cell to select)			CO	0.13	0.13	0.13			52.000			
Waste Oil/Fuel Oil#6			NO_x	0.055	0.055	0.026				22.000		
			SO_2	0.011	0.058	0.0034					23.200	
			VOCs	0.032	0.032	0.032						12.800
Material Handling Operations	400	tons/hr	PM	0.0082			3.272					
			PM_{10}	0.0036				1.428				
Silo Filling & Plant Load-out	400	tons/hr	PM	0.00092			0.368					
			PM_{10}	0.00092				0.368				
			CO	0.0017					0.680			
			VOCs	0.011								4.400
Asphalt Heater				Diesel/Fuel Oil#2	LPG	Natural Gas						
				lbs/gal	lbs/gal	lbs/ft^3						
Fuel Used: (Click on cell to select)			PM	0.002	0.0005	0.0000076	0.041					
Diesel/Fuel Oil#2	20.4	gals/hr or ft^3/hr	PM10	0.002	0.0005	0.0000076		0.041				
			CO	0.0012	0.002	0.0000089			0.024			
			NOx	0.02	0.0145	0.0001				0.408		
			SO2	0.0002	0.000076	0.0000006					0.004	
			VOCs	0.000556	0.00055	0.0000055						0.011
Internal Combustion Engines -HMAP				Diesel / Fuel Oil#2		Natural Gas						
				< 600 HP	≥ 600 HP							
				lbs/hp-hr	lbs/hp-hr	lbs/hp-hr						
Diesel<600 hp	0	hp	PM	0.0022	0.0007	0.000069	0.000					
Diesel>600 hp	0	hp	PM_{10}	0.0022	0.0007	0.0000005		0.000				
Nat gas/LPG	0	hp	CO	0.00668	0.0055	0.02220			0.000			
			NO_x	0.031	0.0240	0.0286				0.000		
			SO_2	0.0000121	0.0000121	0.0000041					0.000	
			VOCs	0.00247	0.0007	0.000826						0.000
		TOTAL EMISSIONS FROM HMAP OPERATIONS (lbs/hour)					16.88	11.04	52.70	22.41	23.20	17.21

C&S Operations	TPH	Quantity		lbs/ton			PM	PM_{10}	CO	NO_x	SO_2	VOCs
Batch Drop Operation	325	0	*PM*	0.0011			0.000					
			PM_{10}	0.000526				0.000				
Feed Hoppers	325	1	*PM*	0.0011			0.358					
			PM_{10}	0.000526				0.171				
Crushing	325	1	*PM*	0.0012			0.39000					
			PM_{10}	0.00054				0.176				
Crushing	0	1	*PM*	0.0012			0.00000					
			PM_{10}	0.00054				0.000				
Screening	325	1	*PM*	0.0022			0.715					
			PM_{10}	0.00074				0.241				
Fines Screening	325	1	*PM*	0.0036			1.170					
			PM_{10}	0.0022				0.715				
Stackers	325	4	*PM*	0.0011			1.430					
			PM_{10}	0.000526				0.684				
Conveyor Transfer points	325	8	*PM*	0.00014			0.364					
			PM_{10}	0.000046				0.120				
Conveyor Transfer points	0	0	*PM*	0.00014			0.000					
			PM_{10}	0.000046				0.000				
Internal Combustion Engines -C&S				***Diesel / Fuel Oil#2***		***Natural Gas***						
				< 600 HP	***≥ 600 HP***							
				lbs/hp-hr	*lbs/hp-hr*	*lbs/hp-hr*						
Diesel<600hp	0	*hp*	*PM*	0.0022	0.0007	0.000069	0.000					
Diesel>600 hp	0	*hp*	*PM_{10}*	0.0022	0.0007	0.0000005		0.000				
Nat gas/LPG	0	*hp*	*CO*	0.00668	0.00550	0.0222			0.000			
			NO_x	0.031	0.024	0.0286				0.000		
			SO_2	0.0000121	0.0000121	0.0000041					0.000	
			VOCs	0.00247	0.000705	0.000826						0.000
		TOTAL EMISSIONS FROM C&S OPERATIONS (lbs/hour)					4.43	2.11	0.00	0.00	0.00	0.00

Concrete Batch Plant Operations			lbs/ton				PM	PM_{10}	CO	NO_x	SO_2	VOCs
Concrete Batch Plant Operations	300	*tons/hr*	*PM*	1.20E-02			3.612					
			PM_{10}	0.00481				1.443				
Boilers/Heaters				***Diesel***	***Natural Gas / LPG***	***Propane***						
				lbs/gal	*lbs/gal*	*lbs/ft^3*						
Fuel Used: (Click on cell to select)			*PM*	0.024	0.00724	0.00663	0.000					
Natural Gas / LPG		*gals/hr or ft^3/hr*	*PM10*	0.024	0.00724	0.00663		0.000				
			CO	0.0365	0.08	0.0354			0.000			
			NOx	0.146	0.0952	0.21				0.000		
			SO2	0.00152	0.00057	0					0.000	
			VOCs	0.0025	0.00524	0.00331						0.000
Internal Combustion Engines -CBP				***Diesel / Fuel Oil#2***		***Natural Gas***						
				< 600 HP	***≥ 600 HP***							
				lbs/hp-hr	*lbs/hp-hr*	*lbs/hp-hr*						
Diesel<600hp	0	*hp*	*PM*	0.0022	0.0007	0.0000694	0.000					
Diesel>600 hp	0	*hp*	*PM_{10}*	0.0022	0.0007	0.0000005		0.000				
Nat gas/LPG	0	*hp*	*CO*	0.00668	0.00550	0.02220			0.000			
			NO_x	0.031	0.024	0.02860				0.000		
			SO_2	0.0000121	0.0000121	0.0000041					0.000	
			VOCs	0.00247	0.000705	0.000826						0.000
	TOTAL EMISSIONS FROM CONCRETE BATCH PLANT OPS (lbs/hour)						3.61	1.44	0.00	0.00	0.00	0.00

FUGITIVES											
Vehicular traffic	0	*VMT/hr*	*PM*	0.66	0.000						
			PM_{10}	0.17		0.000					
Wind Erosion from Aggregate Storage Piles	0	*# piles*	*PM*	0.0001	0.000						
			PM_{10}	0.00005		0.000					
	TOTAL FUGITIVE EMISSIONS (lbs/hour)				0.00	0.00	0.00	0.00	0.00	0.00

TOTAL EMISSIONS FROM FACILITY	PM	PM_{10}	CO	NO_x	SO_2	VOCs
	lbs/hr	*lbs/hr*	*lbs/hr*	*lbs/hr*	*lbs/hr*	*lbs/hr*
TOTAL EMISSIONS FROM HMAP OPERATIONS (lbs/hour)	**16.88**	**11.04**	**52.70**	**22.41**	**23.20**	**17.21**
Emissions from Asphal;t Heater	**0.0408**	**0.0408**	**0.0245**	**0.4080**	**0.0041**	**0.0113**
TOTAL EMISSIONS FROM C&S OPERATIONS (lbs/hour)	**4.43**	**2.11**	**0.00**	**0.00**	**0.00**	**0.00**
Toatal Emissions from Mobile C & S Operations	**1.45**	**0.57**				
TOTAL EMISSIONS FROM CONCRETE BATCH PLANT OPS (lbs/hour)	**3.61**	**1.44**	**0.00**	**0.00**	**0.00**	**0.00**
TOTAL FUGITIVE EMISSIONS (lbs/hour)	**0.00**	**0.00**	**0.00**	**0.00**	**0.00**	**0.00**
TOTAL POTENTIAL EMISSIONS (lbs/hour)	**26.41**	**15.20**	**52.73**	**22.82**	**23.21**	**17.22**

Emissions are based on one drum dryer of 400 tons per hour. HMAP operates for 3,075 hours a year.

Asphalt heater uses 1.75 gallons per hour of fuel.

C & S plant has one crushers- 325 TPH . C & S plant operated for 8,760 hrs per year.

Moblie C & S plant has one crusher of 250 TPH. Mobile C & S plant operates for 8,760 hours per year.

CBP is of 150 cubic yds per hour equivalent to 300 TPH. CBP plant operates for 8,760 hours per year.

Plant Name	Hours	PM	PM_{10}	CO	NO_x	SO_2	VOCs
	per year	Tons per year					
Hot Mix asphalt Plant	**3,416**	**28.83**	**18.85**	**90.02**	**38.27**	**39.63**	**29.40**
Asphalt Heater	**8,760**	**0.18**	**0.18**	**0.11**	**1.79**	**0.02**	**0.05**
Crushing & Screening Plant	**8,760**	**19.39**	**9.22**	**0.00**	**0.00**	**0.00**	**0.00**
Mobile Crushing and Crushing Plant	**8,760**	**6.36**	**2.50**	**0.00**	**0.00**	**0.00**	**0.00**
Concrete Batch Plant	**8,760**	**15.82**	**6.32**	**0.00**	**0.00**	**0.00**	**0.00**
Total		**70.58**	**37.07**	**90.13**	**40.06**	**39.65**	**29.45**

SYNTHETIC MINOR OPERATING HOURS LIMIT

	OUTSIDE MARICOPA COUNTY - ATTAINMENT AREA					
PTE (All sources), tons/yr	**116**	**67**	**231**	**100**	**102**	**75**
Annual Hours Limit @ 90 tons/yr	6815	8760	3414	7889	7756	8760
	ANNUAL HOURS LIMIT		**3414**	**hours per year**		
	OUTSIDE MARICOPA COUNTY - NON-ATT AREA					
PTE (Only HMAP+Fugitives), tons/yr	**74**	**48**	**231**	**98**	**102**	**75**
Annual Hours Limit @ 90 tons/yr	8760	8760	3415	8033	7757	8760
	ANNUAL HOURS LIMIT		**3415**	**hours per year**		